SIEMENS

SIPROTEC 5
Hardware Description

V7.30 and higher

Manual

C53000-G5040-C002-B

NOTE

For your own safety, observe the warnings and safety instructions contained in this document, if available.

Document version: C53000-G5040-C002-B.06

Edition: 08.2016

Version of the product described: V7.30 and higher

Preface

Purpose of the Manual

This manual describes the hardware of the SIPROTEC 5 device family and provides general information on the product structure, the modules and technical data.

Target Audience

Protection system engineers, commissioning engineers, persons entrusted with the setting, testing and maintenance of automation, selective protection and control equipment, and operational crew in electrical installations and power plants.

Scope

This manual applies to the SIPROTEC 5 device family.

Further Documentation

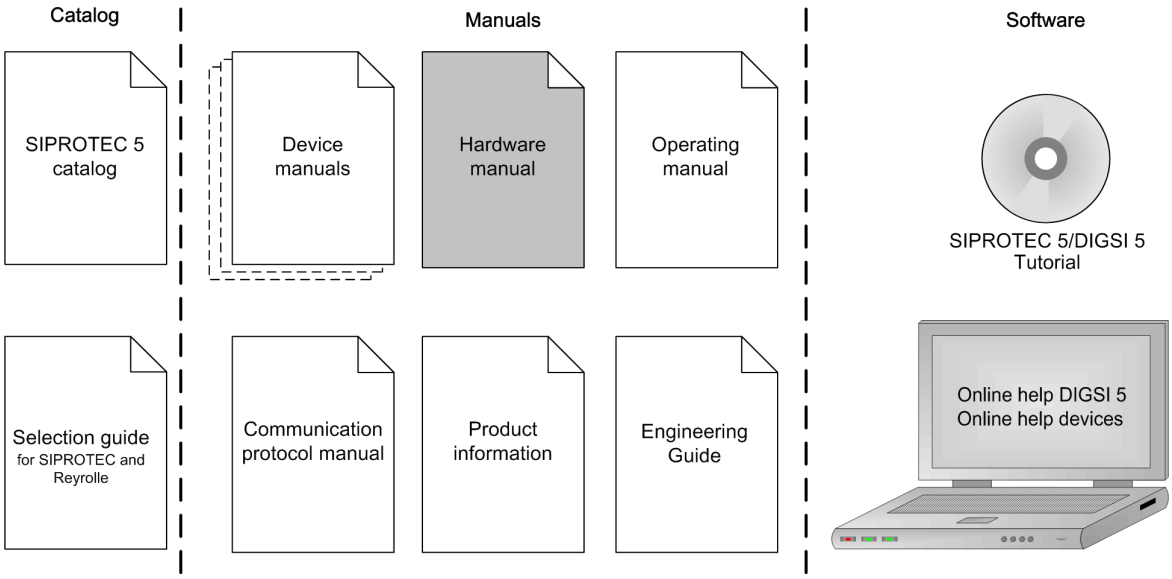

[dwprefhw-221012-01.tif, 3, en_US]

- Device manuals
  Each Device manual describes the functions and applications of a specific SIPROTEC 5 device. The printed manual and the online help for the device have the same informational structure.
- Hardware manual
  The Hardware manual describes the hardware building blocks and device combinations of the SIPROTEC 5 device family.
- Operating manual
  The Operating manual describes the basic principles and procedures for operating and assembling the devices of the SIPROTEC 5 range.

- Communication protocol manual

  The Communication protocol manual contains a description of the protocols for communication within the SIPROTEC 5 device family and to higher-level network control centers.

- Product information

  The Product information includes general information about device installation, technical data, limiting values for input and output modules, and conditions when preparing for operation. This document is provided with each SIPROTEC 5 device.

- Engineering Guide

  The Engineering Guide describes the essential steps when engineering with DIGSI 5. In addition, the Engineering Guide shows you how to load a planned configuration to a SIPROTEC 5 device and update the functionality of the SIPROTEC 5 device.

- DIGSI 5 online help

  The DIGSI 5 online help contains a help package for DIGSI 5 and CFC.

  The help package for DIGSI 5 includes a description of the basic operation of software, the DIGSI principles and editors. The help package for CFC includes an introduction to CFC programming, basic examples of working with CFC, and a reference chapter with all the CFC blocks available for the SIPROTEC 5 range.

- SIPROTEC 5/DIGSI 5 Tutorial

  The tutorial on the DVD contains brief information about important product features, more detailed information about the individual technical areas, as well as operating sequences with tasks based on practical operation and a brief explanation.

- SIPROTEC 5 catalog

  The SIPROTEC 5 catalog describes the system features and the devices of SIPROTEC 5.

- Selection guide for SIPROTEC and Reyrolle

  The selection guide offers an overview of the device series of the Siemens protection devices, and a device selection table.

Indication of Conformity

This product complies with the directive of the Council of the European Communities on harmonization of the laws of the Member States relating to electromagnetic compatibility (EMC Council Directive 2014/30/EU) and concerning electrical equipment for use within specified voltage limits (Low Voltage Directive 2014/35/EU).

This conformity has been proved by tests performed according to the Council Directive in accordance with the product standard EN 60255-26 (for EMC directive) and with the product standard EN 60255-27 (for Low Voltage Directive) by Siemens AG.

The device is designed and manufactured for application in an industrial environment.

The product conforms with the international standards of IEC 60255 and the German standard VDE 0435.

Other Standards

IEEE Std C 37.90

The technical data of the product is approved in accordance with UL.

For more information about the UL database, see *certified.ul.com*

Select **Online Certifications Directory** and enter **E194016** as **UL File Number**.

IND. CONT. EQ.
69CA

[ul_listed_c_us, 1, --_--]

Additional Support

For questions about the system, please contact your Siemens sales partner.

Support

Our Customer Support Center provides a 24-hour service.

Phone:	+49 (180) 524-7000
Fax:	+49 (180) 524-2471
E-Mail:	*support.energy@siemens.com*

Training Courses

Inquiries regarding individual training courses should be addressed to our Training Center:

Siemens AG
Siemens Power Academy TD

Humboldtstraße 59
90459 Nürnberg
Germany

Phone:	+49 (911) 433-7415
Fax:	+49 (911) 433-7929
E-Mail:	*poweracademy@siemens.com*
Internet:	*www.siemens.com/poweracademy*

Notes on Safety

This document is not a complete index of all safety measures required for operation of the equipment (module or device). However, it comprises important information that must be followed for personal safety, as well as to avoid material damage. Information is highlighted and illustrated as follows according to the degree of danger:

DANGER

DANGER means that death or severe injury **will** result if the measures specified are not taken.

✧ Comply with all instructions, in order to avoid death or severe injuries.

WARNING

WARNING means that death or severe injury **may** result if the measures specified are not taken.

✧ Comply with all instructions, in order to avoid death or severe injuries.

CAUTION

CAUTION means that medium-severe or slight injuries **can** occur if the specified measures are not taken.

✧ Comply with all instructions, in order to avoid moderate or minor injuries.

NOTICE

NOTICE means that property damage **can** result if the measures specified are not taken.

✧ Comply with all instructions, in order to avoid property damage.

NOTE

Important information about the product, product handling or a certain section of the documentation which must be given particular attention.

Qualified Electrical Engineering Personnel

Only qualified electrical engineering personnel may commission and operate the equipment (module, device) described in this document. Qualified electrical engineering personnel in the sense of this manual are people who can demonstrate technical qualifications as electrical technicians. These persons may commission, isolate, ground and label devices, systems and circuits according to the standards of safety engineering.

Proper Use

The equipment (device, module) may be used only for such applications as set out in the catalogs and the technical description, and only in combination with third-party equipment recommended and approved by Siemens.

Problem-free and safe operation of the product depends on the following:

- Proper transport
- Proper storage, setup and installation
- Proper operation and maintenance

When electrical equipment is operated, hazardous voltages are inevitably present in certain parts. If proper action is not taken, death, severe injury or property damage can result:

- The equipment must be grounded at the grounding terminal before any connections are made.
- All circuit components connected to the power supply may be subject to dangerous voltage.
- Hazardous voltages may be present in equipment even after the supply voltage has been disconnected (capacitors can still be charged).
- Operation of equipment with exposed current-transformer circuits is prohibited. Before disconnecting the equipment, ensure that the current-transformer circuits are short-circuited.
- The limiting values stated in the document must not be exceeded. This must also be considered during testing and commissioning.

Open Source Software

The product contains, among other things, Open Source Software developed by third parties. The Open Source Software used in the product and the license agreements concerning this software can be found in the Readme_OSS. These Open Source Software files are protected by copyright. Your compliance with those license conditions will entitle you to use the Open Source Software as foreseen in the relevant license. In the event of conflicts between Siemens license conditions and the Open Source Software license conditions, the Open Source Software conditions shall prevail with respect to the Open Source Software portions of the software. The Open Source Software is licensed royalty-free. Insofar as the applicable Open Source Software License Conditions provide for it you can order the source code of the Open Source Software from your Siemens sales contact - against payment of the shipping and handling charges - for a period of at least 3 years since purchase of the Product. We are liable for the Product including the Open Source Software contained in it pursuant to the license conditions applicable to the Product. Any liability for the Open Source Software beyond the program flow intended for the Product is explicitly excluded. Furthermore any liability for defects resulting from modifications to the Open Source Software by you or third parties is excluded. We do not provide any technical support for the Product if it has been modified.

When using DIGSI 5 in online mode, you are provided with the option to go to the main menu **Show Open source information** and read and display the Readme_OSS file containing the original license text and copyright information.

To do this, the following steps are necessary:

- Switch to online mode.
- Select the device.
- Select **online** in the menu bar.
- Click **Show Open source information**.

NOTE

To read the Readme_OSS file, a PDF viewer must be installed on the computer.

In order to operate SIPROTEC 5 devices, a valid DIGSI 5 license is required.

Table of Contents

1 Introduction

1.1 Advantages of SIPROTEC 5

The devices in the SIPROTEC 5 series are based on the many years of experience gathered with SIPROTEC 4. Extensive improvements have also been integrated. Take note of the differences between the modular and non-modular systems.

The SIPROTEC 5 series is based on a newly developed, flexible modular system that is applicable to all the devices. This results in the following advantageous new features:

- You save time because of jumperless devices.

  You can set the rated current ranges (1 A, 5 A) electronically. You do not need to open the devices to do this. You can set the thresholds of the binary inputs by setting parameters.

- The freely configurable, modular device design creates more flexibility.

  You can configure your own device variants in addition to the standard variants. The modular system consists of base and expansion modules, and optional plug-in modules. Thus, you can combine the devices exactly as desired, and the standard variants are expandable. Devices with a size of up to 2-row 19-inches are possible.

- You save time because of prewired terminal blocks.

  The terminal blocks for connection of the relays, of the binary inputs and outputs and of the current and voltage transformers can be removed and fitted again while wired. This enables the possibility of pre-wiring in the cabinet construction phase. Device replacement is uncomplicated and is possible in a short time.

- You do not need to open the device to install and replace plug-in modules.

  The slots for the plug-in modules are externally accessible. Communication modules and measuring-transducer modules (for example, 4 x 20-mA measuring-transducer input) can be plugged in at these plug-in module positions.

- Operation is uncomplicated and intuitive.

  For all modular devices, it is possible to select whether to use a large graphical display, a small display, or no display. The non-modular devices are available with large or small graphical display. The key switches on the expansion module can be selected optionally. The 9 function keys enable a safe and uncomplicated procedure for important operator actions.

- Multi-colored LEDs ensure safe system management.

  The 16 LEDs on the base module are 2-colored (green/red). Thus, the status of a signal (OK/disrupted) can be shown clearly, for example. There can also be 16 red LEDs on each expansion module.

- Up to 40 analog channels per device create a greater scope of functions than in SIPROTEC 4.

  Thus, even complex applications such as the 1 1/2 circuit-breaker layout are possible.

NOTE

For the central busbar protection 7SS85, up to 80 analog channels are possible.

1.2 Modular Systems and Hardware Characteristics

The SIPROTEC 5 series includes both modular and non-modular devices.

Modular devices consist of a base module (1/3 of 19 inches) and can be expanded with expansion modules (1/6 of 19 inches). The device type identifier for modular devices is XXX85, XXX86, or XXX87, for example, 7SA86.

Type xxx84 devices have the same hardware properties as the modular devices, but they cannot be expanded with expansion modules.

All non-modular devices consist of just a base module (1/3 of 19 inches) and **cannot** be expanded with expansion modules (1/6 of 19 inches). The device type identifier for non-modular devices is 7XX82, for example, 7SJ82.

Modular System for Modular Devices

The system is based on a modular structure. A modular device always consists of a base module and optionally of expansion modules. The modules can be selected according to hardware characteristics. These characteristics are:

- Module size
- Type of construction
- Fastening of the on-site operation panel
- Creation of the on-site operation panel
- Input and output module
- Plug-in modules

The modules are available in 2 sizes:

- Base module (1/3 of 19 inches)
- Expansion module (1/6 of 19 inches)

The devices are available in 3 designs: These are:

- Flush-mounting devices with on-site operation panel fitted directly on the device
- Surface-mounting devices with integrated on-site operation panel
- Surface-mounting devices with detached on-site operation panel

The on-site operation panels of the base modules can be selected from 3 variants:

- With a large display, keypad, and 16 two-colored LEDs
- With a small display, keypad, and 16 two-colored LEDs
- Without a display, without a keypad (standard), but with 16 two-colored LEDs

The on-site operation panels of the expansion modules can be selected from 3 variants:

- With 16 monochrome LEDs and 2 key switches
- With 16 monochrome LEDs
- Without display elements

The base modules always contain the power-supply module PS201 and an input and output module IO2XX.

The expansion modules contain an input and output module IO2XX or a plug-in module assembly with integrated power supply CB202. The 1st expansion module in the 2nd device row always contains the power-supply module PS203.

The plug-in modules are available for various applications. Plug-in modules can be installed in 1 base module or in 1 expansion module with 1 plug-in module assembly with integrated power supply CB202. You can find more information on the available plug-in module types in chapter *4 Plug-In Modules*.

Hardware Characteristics of Non-Modular Devices (7xx82)

A non-modular device always consists of just 1 module (1/3 of 19 inches) and cannot be expanded with expansion modules (1/6 of 19 inches). These hardware characteristics are:

- Module size: 1/3 of 19 in.
- Type of construction: Flush-mounting devices with on-site operation panel fitted directly on the device

The on-site operation panels can be selected from 2 variants:

- With a large display, keypad, and 16 two-colored LEDs
- With a small display, keypad, and 16 two-colored LEDs

The module always contains the power-supply module PS101 and an input and output module IO10X. The input and output module IO10X includes the terminals for current and voltage transformers. Optionally, the module can be equipped an additional input and output module IO110 for extra binary inputs and outputs.

The plug-in modules are available for various applications. You can find more information on the available plug-in module types in chapter *4 Plug-In Modules*.

2 Forms of Devices and On-Site Operation Panels

2.1 Flush-Mounting Devices

2.1.1 Description

The flush-mounting devices were conceived for installation in 19-inch racks or special openings in control desks and cabinets. The on-site operation panel is linked permanently to the device.

Base Module

[le_surface_mounting_front, 1, --_--]

Figure 2-1 Front View

(1) USB connection type B

(2) On-site operation panel

(3) Bus terminal for expansion module, provided only in modular devices (shown with bus termination plate)

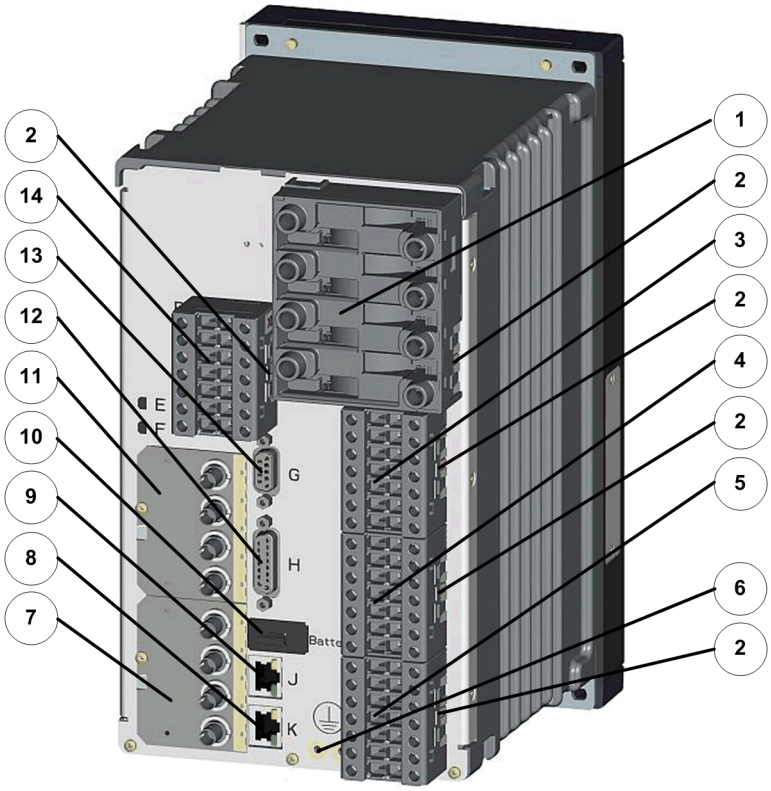

[dwbasrue-030211-01.tif, 1, --_--]

Figure 2-2 Rear View of a Modular Device, Terminals of a Typical Device with IO202

(1) Current terminal 1A
(2) Spring clip
(3) Voltage terminal 1B
(4) Voltage terminal 1C
(5) Voltage terminal 1D
(6) Grounding terminal
(7) Plug-in module position F
(8) Terminal for COM link K
(9) Terminal for integrated Ethernet interface J
(10) Battery compartment
(11) Plug-in module position E
(12) Terminal for detached on-site operation panel H
(13) Terminal for time synchronization G
(14) Voltage terminal 2B

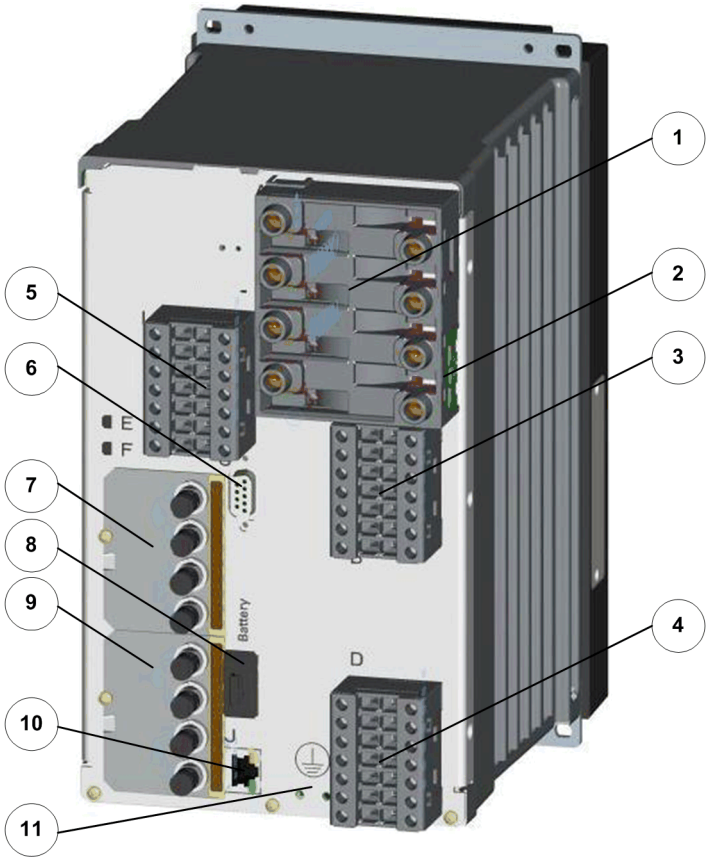

[dwlightr-250613-01.tif, 1, --_--]

Figure 2-3 Rear View of a Non-Modular Device (7xx82), Terminals of a Typical Device with IO102

(1) Current terminal A
(2) Spring clip
(3) Voltage terminal B
(4) Voltage terminal D
(5) Voltage terminal L
(6) Time synchronization G
(7) Plug-in module position E
(8) Battery compartment
(9) Plug-in module position F
(10) Terminal for integrated Ethernet interface J
(11) Grounding terminal

Fastening Openings of the Base and 1/3 Module

To remove the screw cover, insert the screwdriver into the slot provided for this.

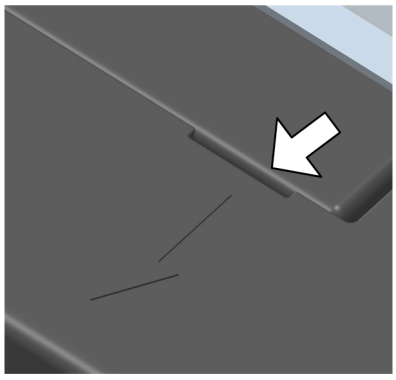

[dw_screwdriver, 1, --_--]

Figure 2-4 Slot for Inserting the Screwdriver

Loosen the cover by turning it slightly. Pull the cover towards you.

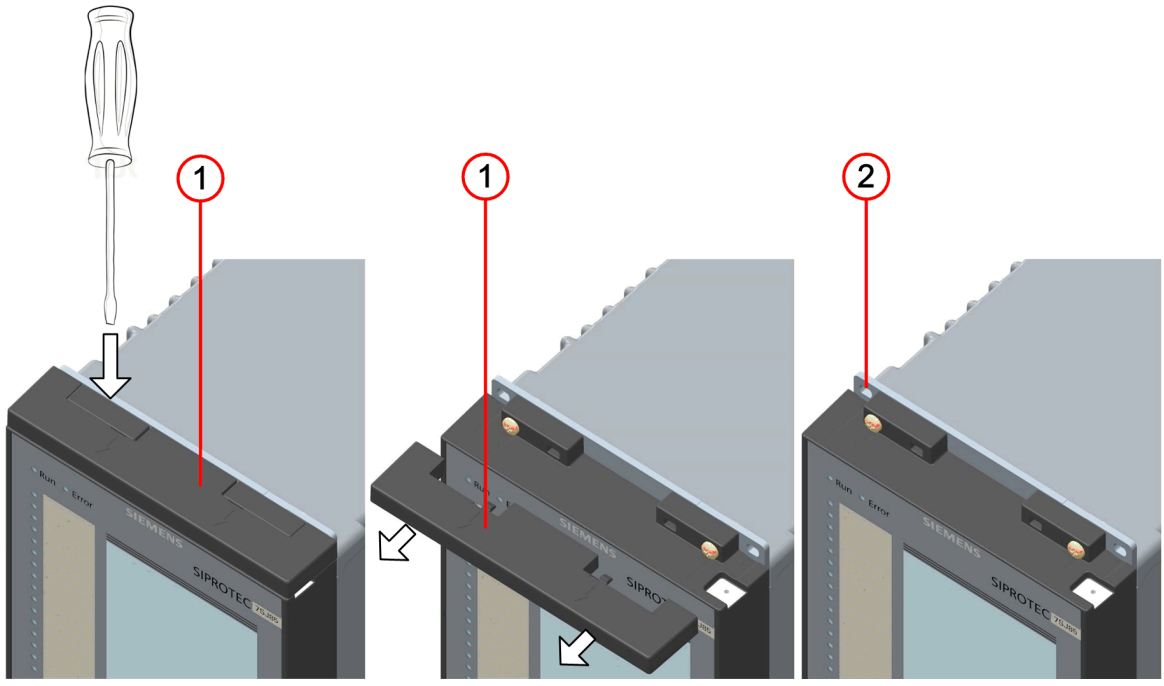

[le_osobep, 1, --_--]

Figure 2-5 Fastening Opening of the Base and 1/3 Module Shown, for Example, on the Top Fastening

(1) Screw cover
(2) Fastening opening

NOTICE

The screw cover can be damaged if it is removed in an incorrect way.

Non-observance of the following measure can result in material damage.

✧ Use a screwdriver to remove the screw cover.

Expansion Module

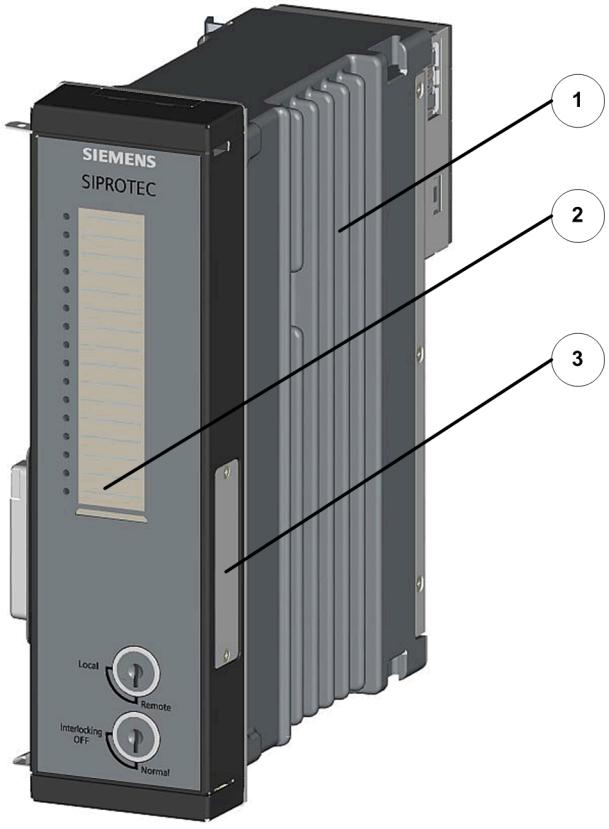

[dwein6po-030211-01.tif, 1, --_--]

Figure 2-6 Front View of the Expansion Module

(1) Device housing
(2) On-site operation panel
(3) Bus terminal for an additional expansion module (shown with bus termination plate)

Unused bus terminals are sealed with a cover.

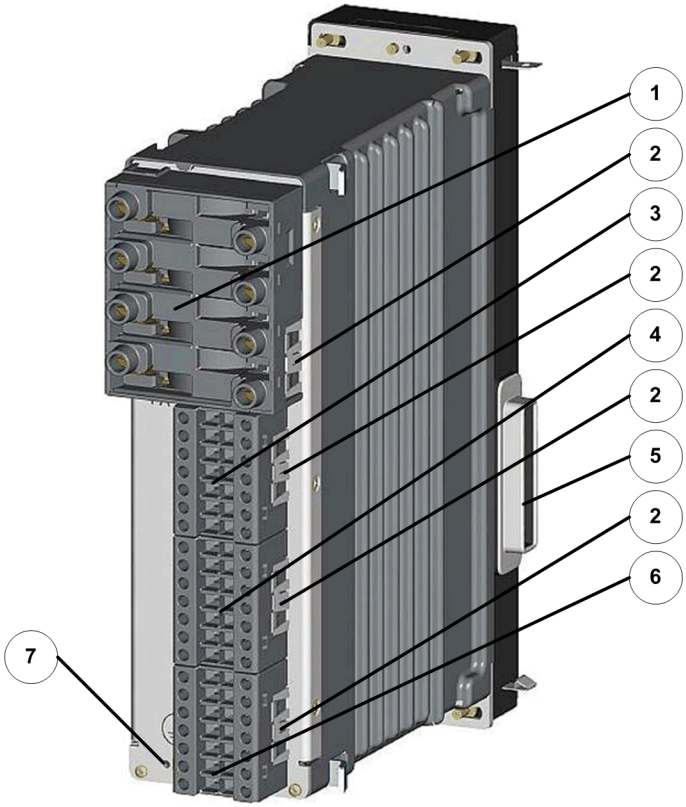

[dwerwrue-030211-01.tif, 1, --_--]

Figure 2-7 Rear View of the Expansion Module

(1) Current terminal xA
(2) Spring clip
(3) Voltage terminal xB
(4) Voltage terminal xC
(5) Bus terminal to the base module
(6) Voltage terminal xD
(7) Grounding terminal

NOTE

These modules can be installed in the 1st and 2nd device rows. x corresponds to the slot in the 19-inch rack.

Possible values in the 1st device row: x = 3, 4, 5, or 6

Possible values in the 2nd device row: x = 8, 9, 10, 11 or 12

Counting Method for Assemblies in 19-Inch Rack (View of the Rear of the Device)

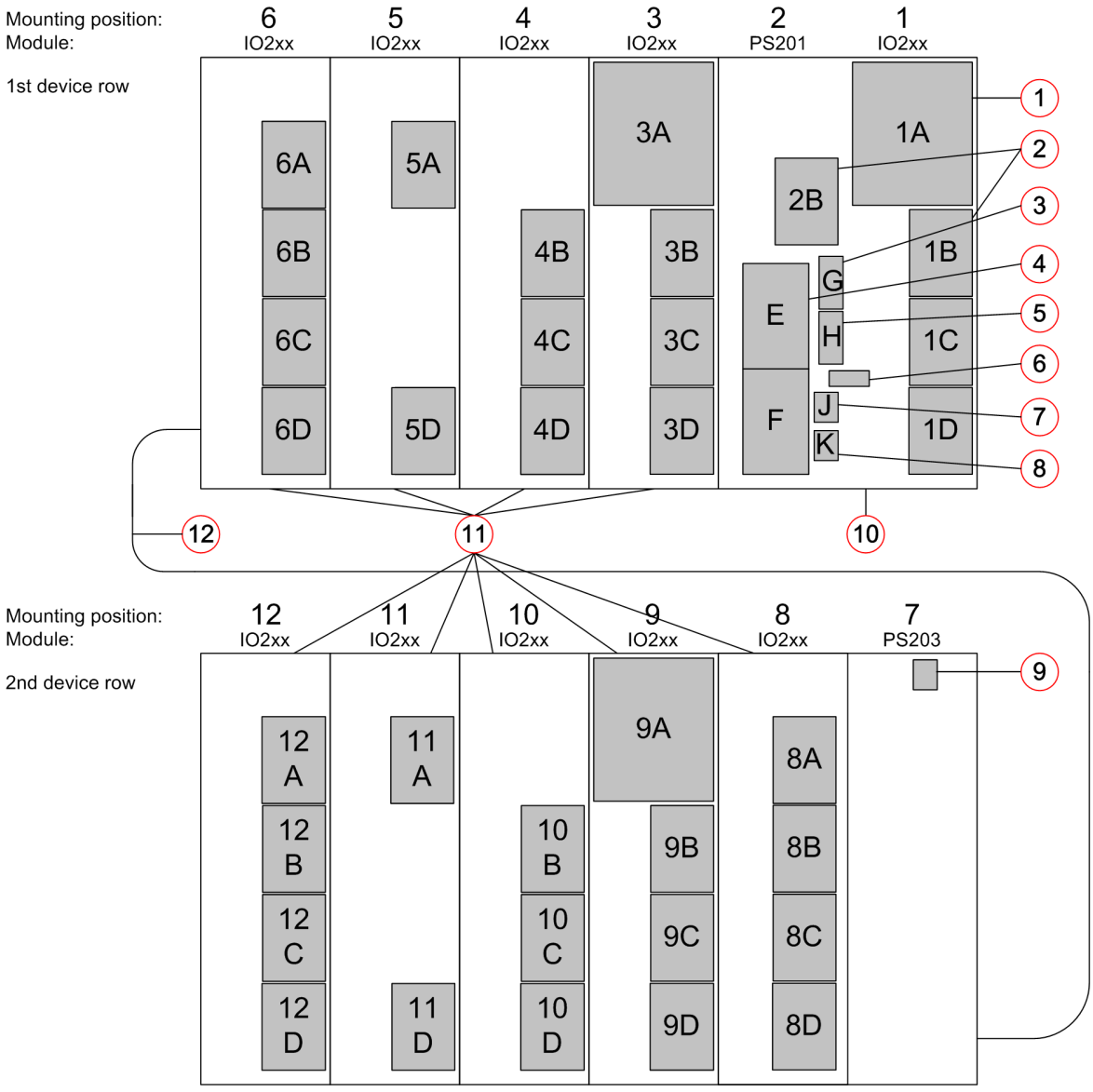

[dwbgrpos-170713-01.tif, 2, en_US]

Figure 2-8 Counting Method for Assemblies in 19 Inch Rack (Example)

(1) Current terminal A
(2) Voltage terminal A, B, C, D
(3) Terminal for time synchronization G
(4) Plug-in module E, F
(5) Terminal for detached on-site operation panel H
(6) Battery compartment
(7) Terminal for integrated Ethernet interface J
(8) Terminal for COM link K
(9) 2-pole terminal to connect power supply
(10) Base module 1/3 of 19 in
(11) Expansion module 1/6 of 19 in
(12) Connecting cable between 1st and 2nd device rows

NOTE

The structure of the 2nd device row is described in section *5.2.1.3 Expanding Devices with 2nd Device Row*.

Connection Systems

[dwverbin-030211-01.tif, 1, --_--]

Figure 2-9 Connection Systems

(1) Cut-out for contact tab
(2) Contact tab (prefitted on the expansion module)
(3) Hinged angle clip
(4) Snap-in spring

NOTE

All on-site operation panels must be connected to one another via the bolt-on contact tabs. The contact tabs are delivered with the expansion modules.

2.2 Surface-Mounting Devices with Integrated On-Site Operation Panel

2.2.1 Description of the Modular Device

NOTE

The basic device structure is described in chapter *2.1.1 Description* .

The surface-mounting devices with integrated on-site operation panel were conceived for fitting on a flat wall surface. The on-site operation panel is fastened on the device with a distance frame. The distance frame creates the necessary wiring space for the cable connections.

Base Module

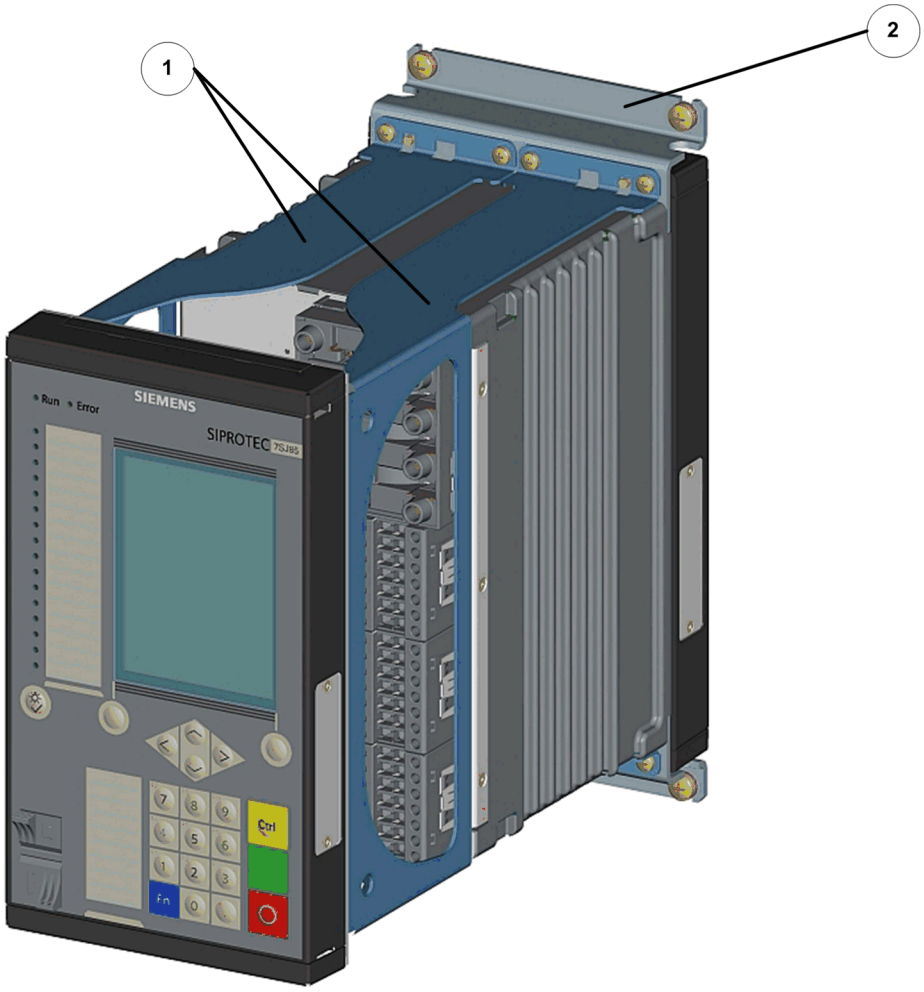

[dwauf3p1-040211-01.tif, 1, --_--]

Figure 2-10 Device Structure

(1) Outer distance frame

(2) Fastening bracket

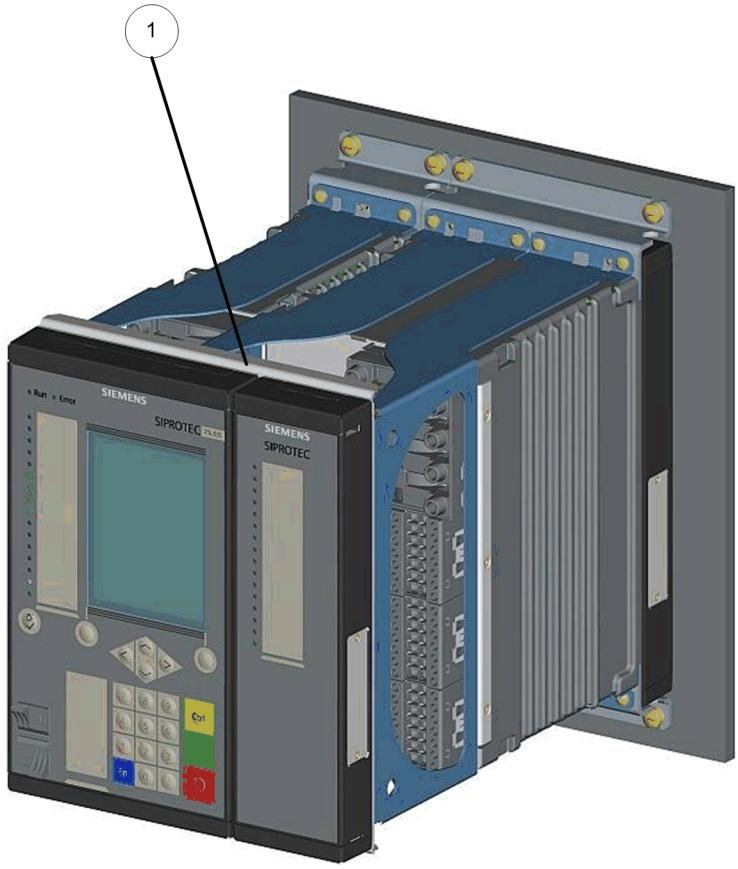

[dwauzeil-040211-01.tif, 1, --_--]

Figure 2-11 Basic and Expansion Module of the Surface-Mounting Device

(1) Mounting bracket

NOTE

When a base module is expanded, 2 mounting brackets must be fitted between the on-site operation panels and the distance frame. The mounting bracket stabilizes the device. The length of the mounting bracket corresponds to the width of the device.

Fastening Openings

[dwbaaube-040211-01.tif, 1, --_--]

Figure 2-12 Fastening Openings of the Base Module

(1) Top fastening openings
(2) Bottom fastening openings

2.2.2 Description of the Non-Modular Surface-Mounting Device

NOTE

The basic device structure is described in chapter *2.1.1 Description* .

The non-modular device variant is designed for mounting to a flat wall surface. This variant is created by flush-mounting the non-modular device into the surface-mounting bracket. In this process, you may face the opening as needed upward (cables coming from above) or downward (cables coming from below) as shown in the following figure. You can order the surface-mounting bracket individually.

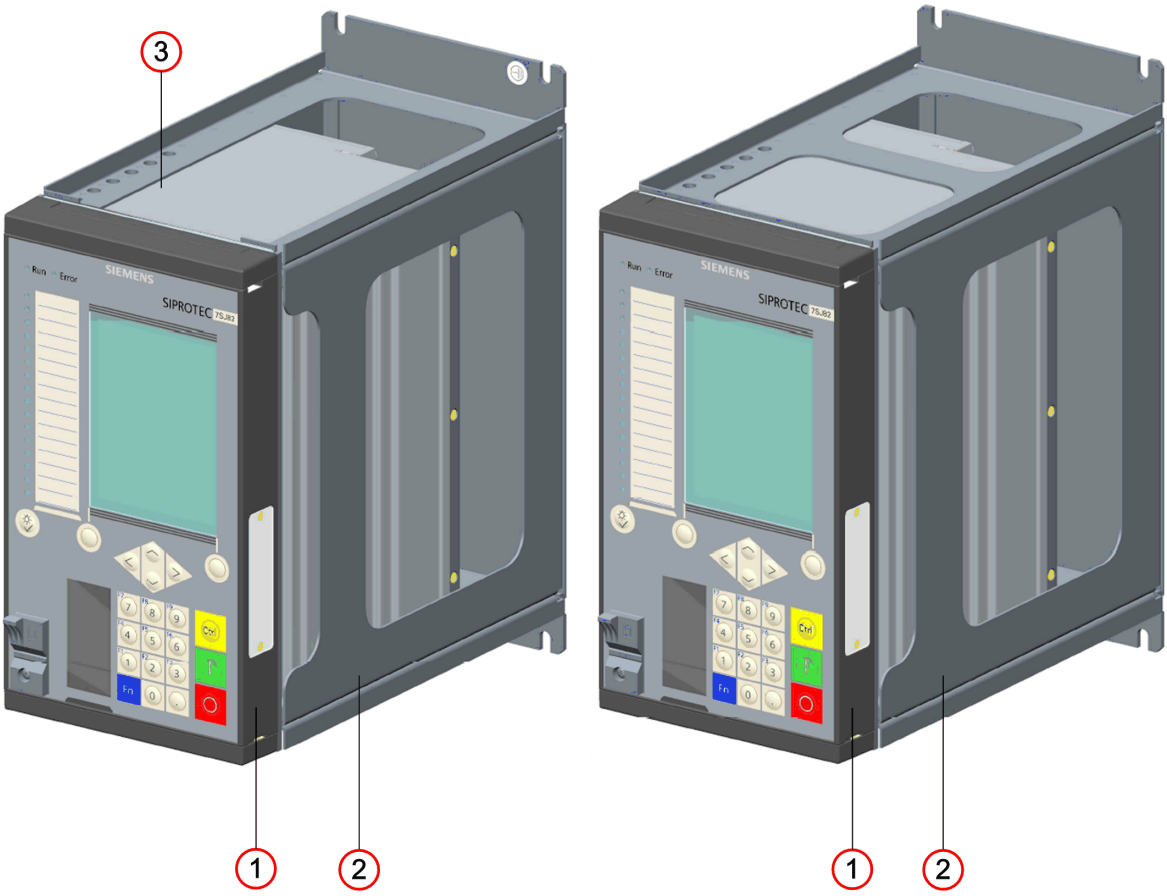

[dw device with console above and below, 1, --_--]

Figure 2-13 Bracket with the Opening Upward (Left) and the Opening Downward (Right)

(1) Flush-mounting device

(2) Bracket for the surface-mounting variant

(3) Bracket opening for cable entry or exit when mounting or dismantling the device

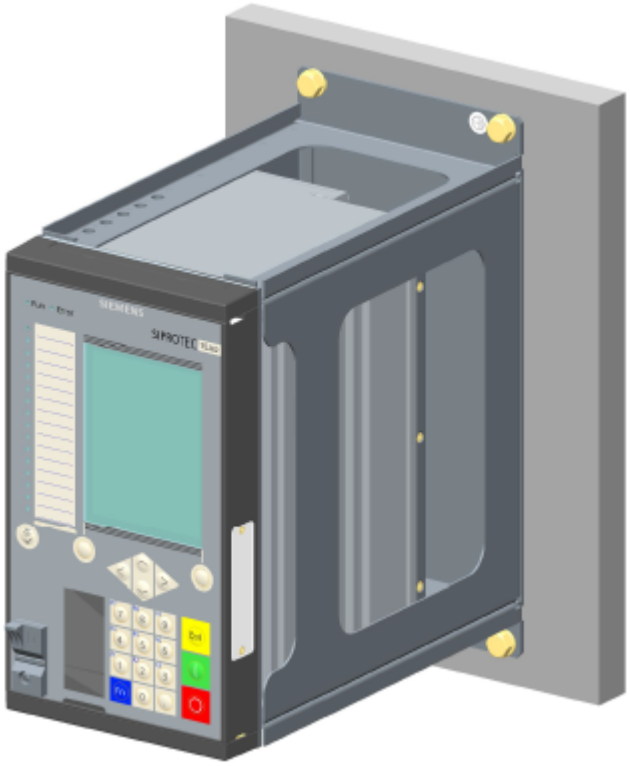

[sc device mounting, 1, --_--]

Figure 2-14 Surface-Mounting Version of the Non-Modular Device, Mounted

Fastening Openings

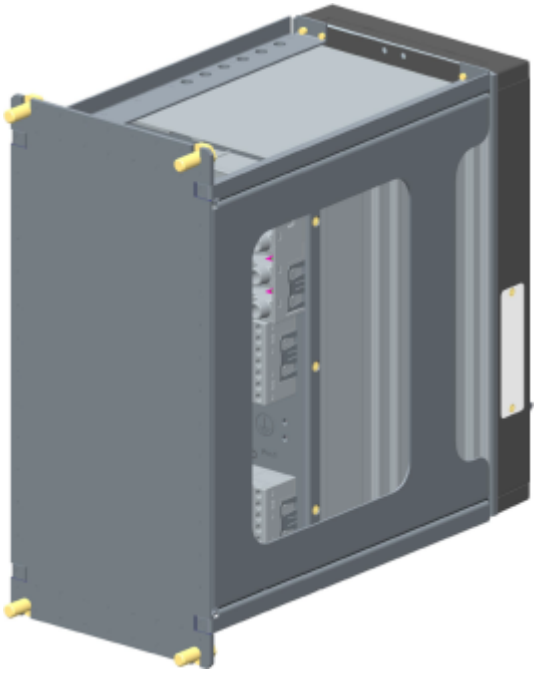

[sc fixing console, 1, --_--]

Figure 2-15 Fastening Openings of the Bracket

2.3 Surface-Mounting Devices with Detached On-Site Operation Panel

2.3.1 Description

NOTE

The basic device structure is described in chapter *2.1.1 Description* .

The surface-mounting devices with detached on-site operation panel are a variant of the surface-mounting devices with an integrated on-site operation panel. The essential difference is that you can fit the on-site operation panel separately from the device. The distance frames are not assembled in this device type.

Base Module

The distance between the installation location of the device and that of the on-site operation panel is limited to not more than 5 m (196.85 in) by the length of the connecting cable. The on-site operation panel must be grounded.

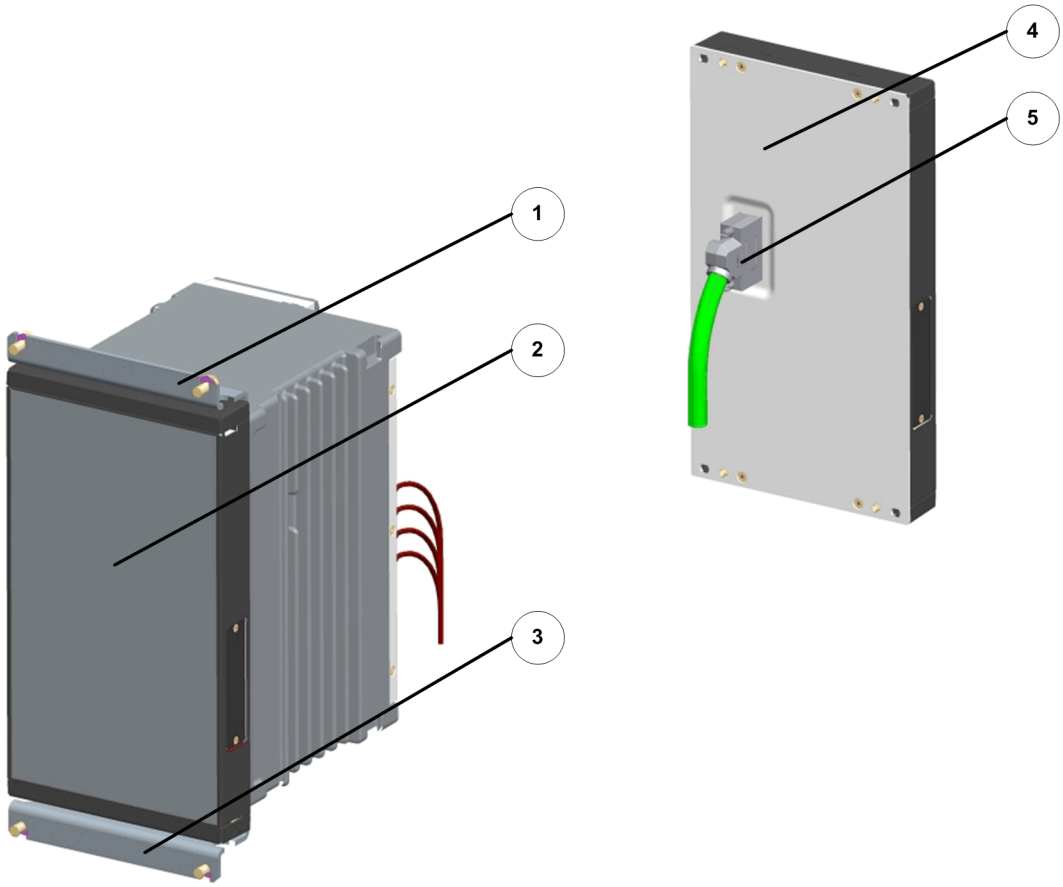

[dwbaaupo-040211-01.tif, 1, --_--]

Figure 2-16 Device Structure of the Base Module

(1) Top mounting bracket
(2) Cover
(3) Bottom mounting bracket
(4) Rear plate of the on-site operation panel
(5) Connecting cable between the base module and the on-site operation panel

Fastening Openings

[dwbaaube-040211-01.tif, 1, --_--]

Figure 2-17 Device Structure of the Base Module

(1) Top fastening openings
(2) Bottom fastening openings

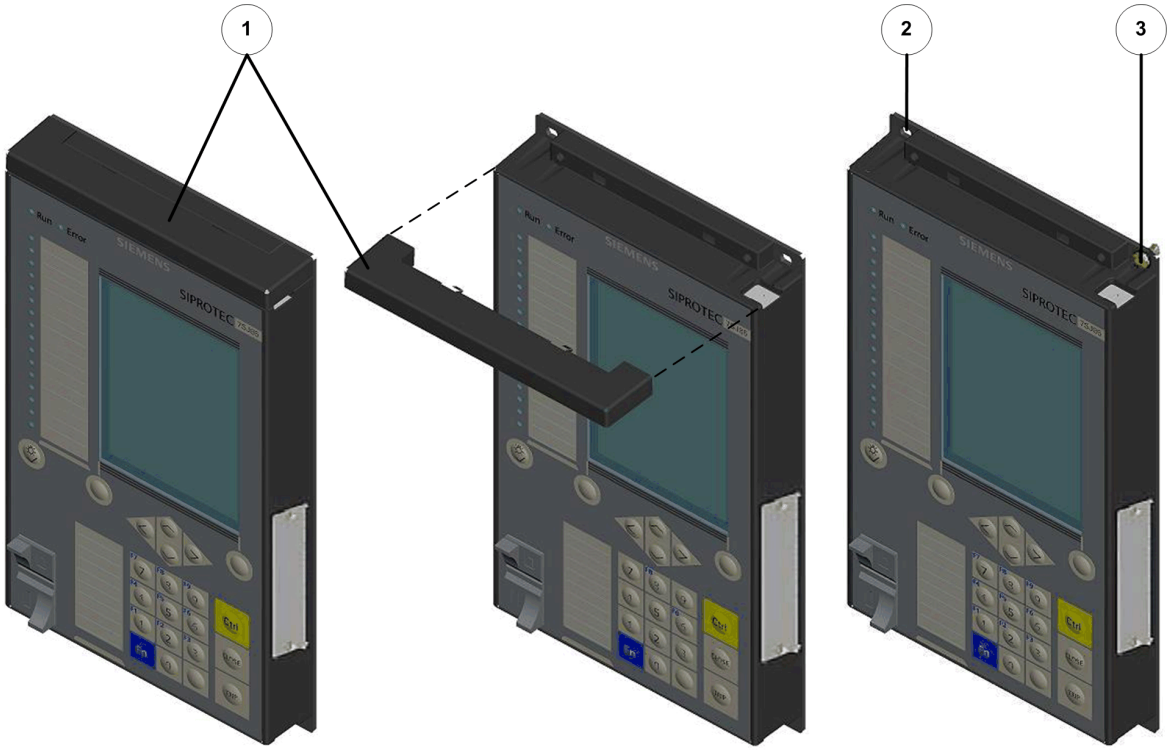

[dwosobb1-040211-01.tif, 1, --_--]

Figure 2-18 Fastening Openings for the On-Site Operation Panel

(1) Screw cover (pull towards you to remove)
(2) Fastening opening
(3) Fastening opening with fastening screw

2.4 On-Site Operation Panels

2.4.1 Description

Operating Concept

The operating concept is based on 4 groups:

- Navigation in the menu tree
- Modification of settings
- Display of measured values and protocols
- Control function from menu bar or control image

Operating personnel are informed about the current state of important measured data, indications, and parameters. The data can be read out. You can perform parameterization and switching operations directly on the device.

User Interface Language

You can set the user interface language to the following:

- Local language
- US English
- IEC 61850

Variants

Corresponding to the equipment configuration, 3 variants are available for each size. In the case of the non-modular devices, only the front variants with small and large display are available.

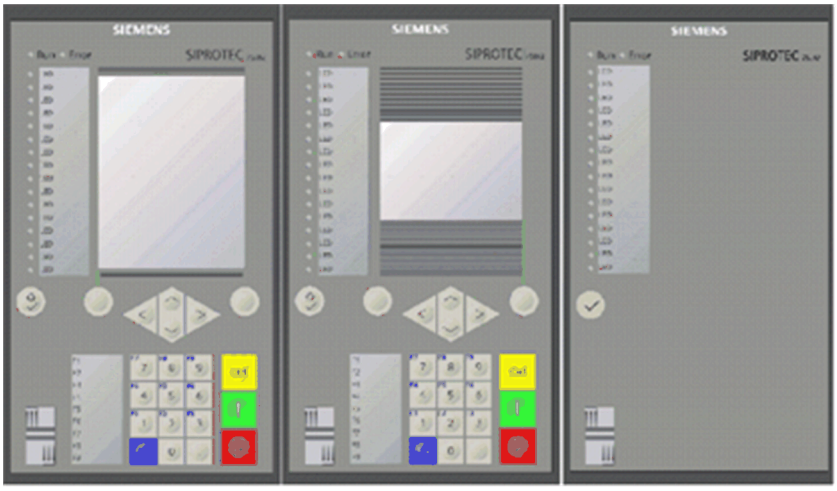

[dwvaosop-080211-01.tif, 2, --_--]

Figure 2-19 Variants 1/3 Devices

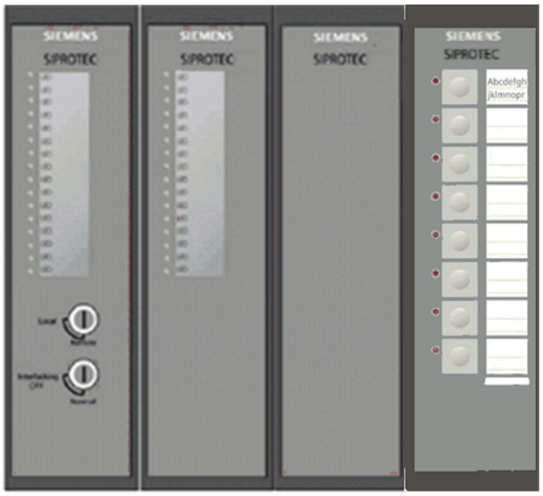

[dw_osop_with_pushbutton, 1, --_--]

Figure 2-20 Variants 1/6 Devices

2.4.2 Overview of Operating Elements and Display Elements

On-Site Operation Panel of the Base and 1/3 Module

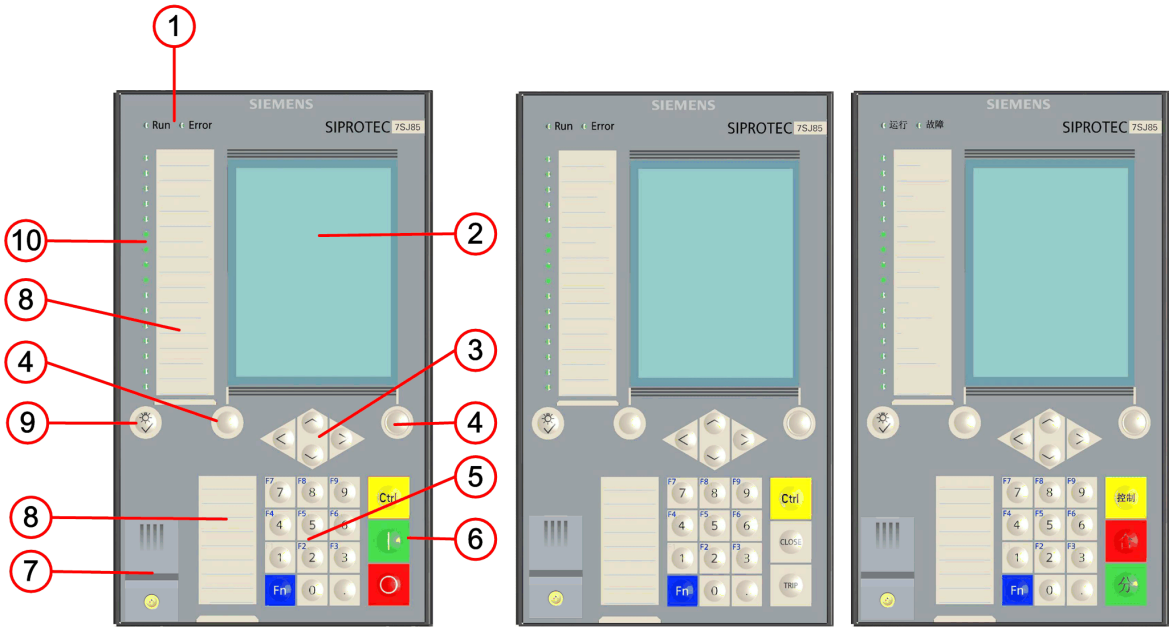

[le_base_module, 1, --_--]

Figure 2-21 Base and 1/3 Module in Standard, US, and China Design

(1) Operating state display
(2) Display in 2 design versions
(3) Keypad with navigation keys
(4) Softkey
(5) Keypad with numerical keys and shiftable function keys
(6) Keypad of control keys
(7) USB port cover
(8) Cover labels

(9) Reset and LED test key
(10) 16 two-colored LEDs

The on-site operation panels are distinguished by the following characteristics:

- Flat and compact design
- LCD (Liquid Crystal Display) graphics display
  Small with 192 x 128 pixels for showing measured values and small control displays
  Large with 240 x 320 pixels for showing measured values and control displays
- Membrane keypad
- Menu navigation function keys
- USB port, type B for notebook/PC
- 16 two-colored LEDs (parameterizable)

The operating elements and display elements of the on-site operation panel for base modules are explained in the following table.

Operating Element/ Display Element	Function
	Testing LED functionality and resetting the LEDs to the original state
	Softkey for confirming entry prompts On the left and right underneath the display
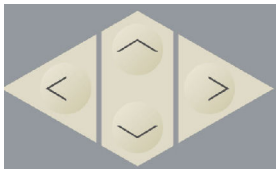	Keypad with navigation keys for navigating in the menus or in the graphical displays (control image and control displays)
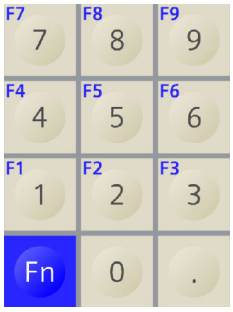	Keypad with numerical keys for the entry of values and with programmable function keys for fast execution of actions Next to the keypad there are marking strips for user-defined marking.
	Activating the function keys
	Control key for activating the control display
	Control key for activating the switching object
	Control key for deactivating the switching object

Operating Element/ Display Element	Function
	Display of operability Run: operable, the green LED is lit. Error: not operable, the red LED is lit.
	USB port with protective cover Type B for notebook/PC
	16 two-colored parameterizable LEDs

On-Site Operation Panel of Expansion Modules

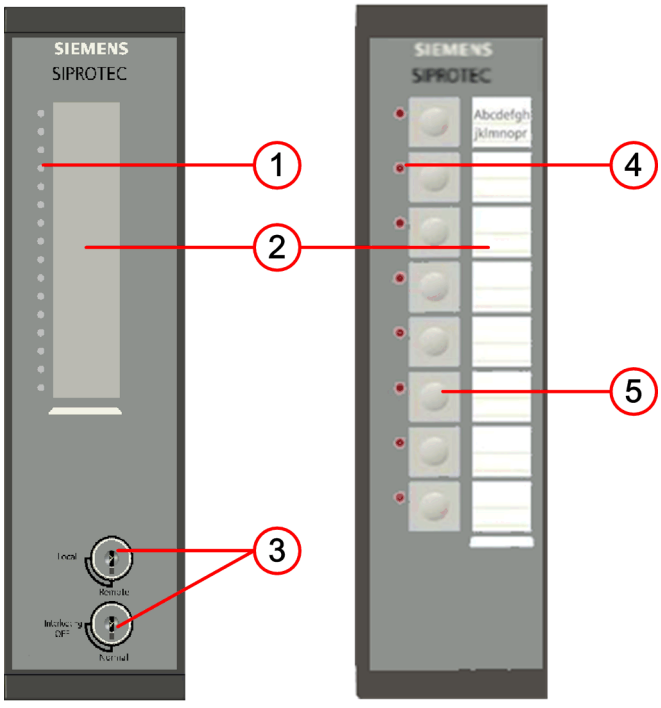

[dwerwmod-040211-01.tif, 2, --_--]

Figure 2-22 Expansion Module

(1) 16 monochrome LEDs
(2) Cover labels
(3) 2 key switches
(4) 8 monochrome LEDs
(5) 8 push-buttons

The on-site operation panels are distinguished by the following characteristics:

- Flat and compact design
- 16 monochrome parameterizable LEDs
- Decorative film
- 2 key switches for setting the operating mode

Besides the base module, you can add an expansion module with key switches. The following table explains the meanings of the switch positions.

Operating Element/ Display Element	Meaning
	16 monochrome parameterizable LEDs
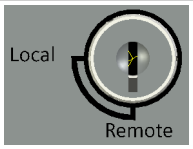	Local: on-site operation Remote: remote control
	Interlocking OFF: unlocked operation Normal: locked operation with the configured interlocking conditions

The on-site operation panel with push-buttons is equipped with 8 LEDs and 8 function keys. It can be used as an on-site operation panel by almost all the I/O modules (except for the modules IO230, IO231). The push-button module must be placed in the 1st row at position 3. If the device has a key switch, then the push-button module must be placed in the 1st row at position 4. One push-button module is permitted per device.

Operating Element/ Display Element	Meaning
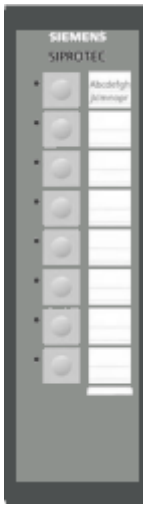	8 monochrome parameterizable LEDs Keypad with programmable function keys for fast execution of actions. Next to the keypad there are marking strips for user-defined marking.

3 Electronic Modules

3.1 Power-Supply Modules of the Modular Devices

3.1.1 Application Sheet of the Power-Supply Modules of the Modular Devices

Module Designation	Function Description
PS201	• Power-supply module • 24 V DC/48 V DC or DC 60 V to DC 250 V and AC 100 V to AC 230 V • In the base module 1/3 of 19 in • Assembled with 3 binary inputs, 2 binary outputs, and one status life contact
PS203	• Power-supply module for supplying the 2nd device row • 24 V DC/48 V DC or DC 60 V to DC 250 V and AC 100 V to AC 230 V • In the expansion module, 1/6 of 19 in
CB202	• Plug-in module assembly with internal power supply • 24 V DC/48 V DC or DC 60 V to DC 250 V and AC 100 V to AC 230 V • In the expansion module, 1/6 of 19 in

3.1.2 Power-Supply Module PS201

3.1.2.1 Description

The power-supply module PS201 is always permanently installed in the base module. The central task is to supply power to all modules. The following can be found on the PS201 module:

- 2 positions for plug-in modules (communication modules, measuring-transducer modules)
- Terminals for time synchronization, the on-site operation panel, an integrated Ethernet interface, and a COM link interface
- A 14-pole voltage terminal (3 binary inputs and 3 binary outputs)
- Battery for the CPU.

The power supply of the other modules is established automatically through the plug-in bus connection when they are assembled.

The following 2 variants are available for the rated voltage range:

- DC 24 V to 48 V
- DC 60 V to DC 250 V and AC 100 V to AC 230 V (50 Hz and 60 Hz)

3.1.2.2 Terminals

Overview of Terminals

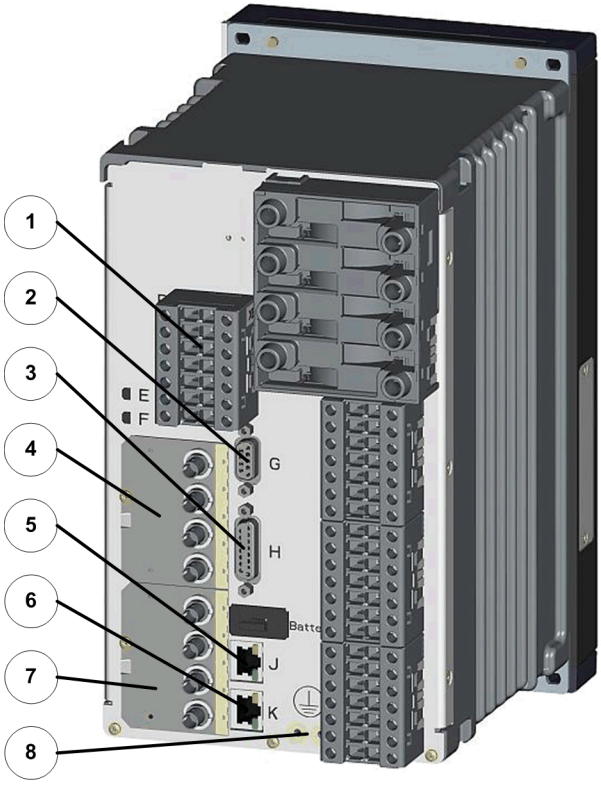

[dwps201x-160513-01.tif, 1, --_--]

Figure 3-1 PS201 – Terminals

(1) Voltage terminal 2B
(2) Time synchronization G
(3) Detached on-site operation panel H
(4) Plug-in module position E
(5) Integrated Ethernet interface J
(6) COM link K, connection to the CB202 PCB assembly (plug-in module assembly), position L
(7) Plug-in module position F
(8) Grounding terminal

Terminal and Connection Diagram

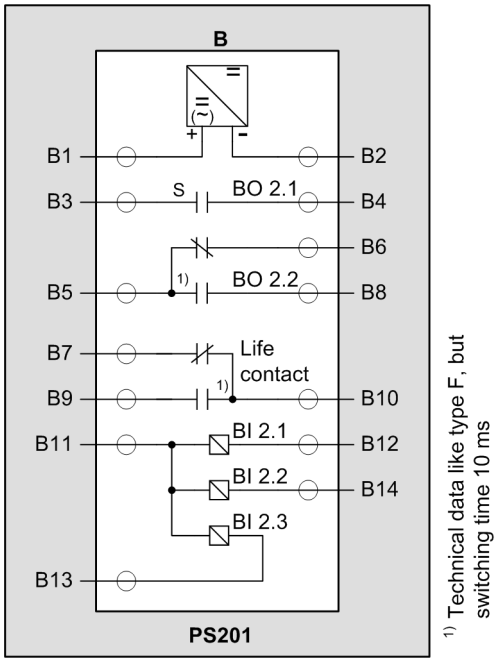

[cdps201x-270912-01.tif, 1, en_US]

Figure 3-2 PS201 – Terminal Diagram

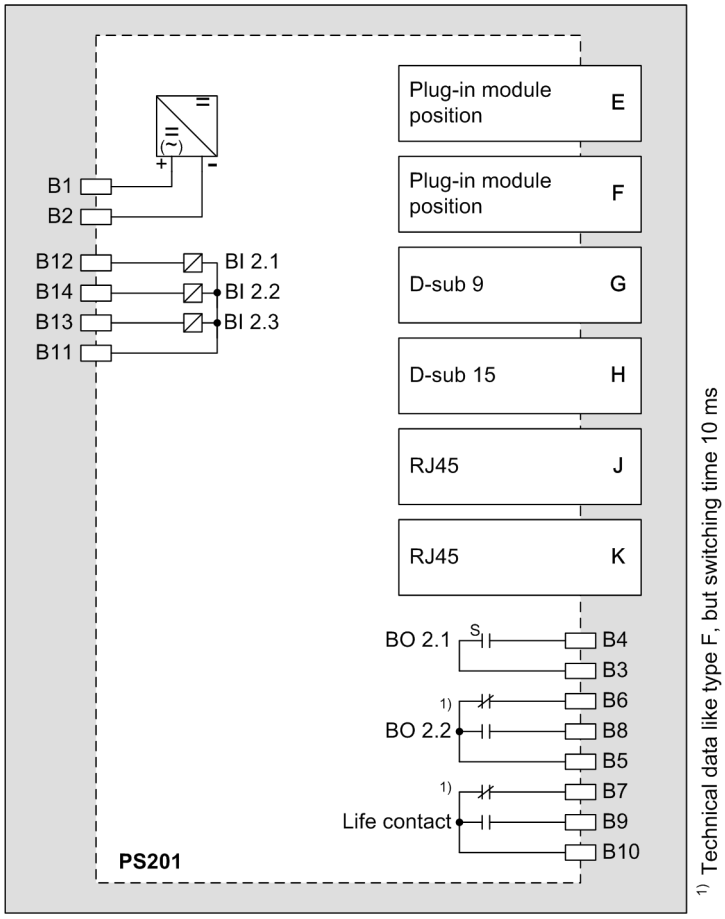

[tdps201x-270812-01.tif, 1, en_US]

Figure 3-3 PS201 – Connection Diagram

Time-Synchronization Terminal

The terminal for time synchronization is located on the D-sub 9 interface (position G). Time synchronization signals for DC 5 V, DC 12 V, and DC 24 V can be processed as an option.

For further information on connecting to time synchronization, see chapter*6.6 Communication Interfaces* in the Technical Data.

On-Site Operation Panel Terminal

The terminal for the on-site operation panel of surface-mounted devices is located on the D-sub 15 interface (position H). The on-site operation panel of surface-mounted devices with the local operation panel integrated or detached is connected to this interface.

For further information on connecting the on-site operation panel , see chapter *6.6 Communication Interfaces* in the Technical Data.

Integrated Ethernet Interface J (RJ45)

This terminal is used to load the device with DIGSI 5 using Ethernet. This terminal also enables straightforward IEC 61850 Ethernet communication or communication with another protocol via Ethernet, for example, for connecting an external RTD unit.

For further information on the integrated Ethernet interface, see chapter *6.6 Communication Interfaces* in the Technical Data.

Ethernet COM Link

The Ethernet connection to the CB202 PCB assembly (plug-in module assembly with integrated power supply) is realized using the RJ45 interface.

The RJ45 interface can be used exclusively for the connection of the CB202 module. This terminal is left unused when no CB202 module is in use.

For further information on the Ethernet COM link, see chapter *6.6 Communication Interfaces* in the Technical Data.

3.1.3 Power-Supply Module PS203

3.1.3.1 Description

If you expand the device into the 2nd device row, you need the PS203 power-supply module.

NOTE

The PS203 power-supply module is always supplied with the expansion module and must always be mounted at position 7.

Up to 5 additional expansion modules are possible in the 2nd device row. The scope of delivery of the PS203 power-supply module includes 1 connecting cable for the 2nd device row, 1 angle rail, 1 sealing panel and 1 adapter bracket.

The PS203 power-supply module has no additional functionality. It is used exclusively to supply power to the 2nd device row.

The rated voltage variant of the PS203 power-supply module must always match the PS201 power-supply module of the base module.

3.1.3.2 Terminals

Overview of Terminals

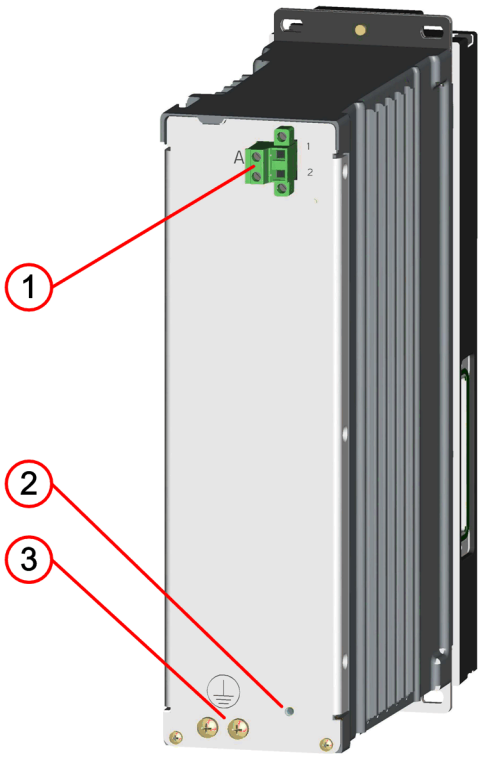

[dwps203x-030713-01.tif, 1, --_--]

Figure 3-4 PS203 – Terminals

(1) 2-pole terminal to connect power supply
(2) LED: Power On
(3) Grounding terminal

Connection Diagram

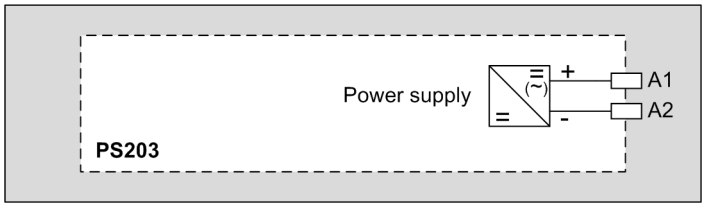

[tdps203x-030713-01.tif, 2, en_US]

Figure 3-5 PS203 – Connection Diagram

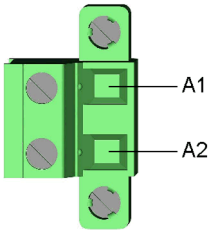

[dwkl2pol-030211-01.tif, 1, --_--]

Figure 3-6 Connection of External Power Supply

NOTE

When expanding a device with the 2nd device row, you must install the connecting cable for the 2nd device row together with the associated angle rail. All required components are included with a power-supply module PS203.

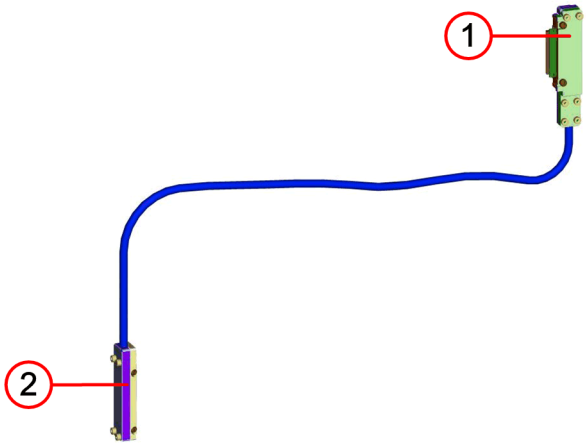

[dw_kabel1-020414-01, 1, --_--]

Figure 3-7 Connecting Cable for the 2nd Device Row

(1) Handle mould for the connection to the 1st device row
(2) Handle mould for the connection to the 2nd device row

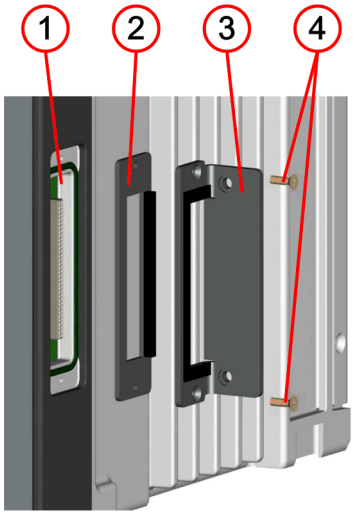

[dw_winkel-020414-01, 1, --_--]

Figure 3-8 Sealing Plate and Adaptor Bracket for the Expansion Module of the 1st Device Row

(1) Device bus of the outermost right expansion module of the 1st device row
(2) Sealing plate
(3) Adaptor angle
(4) 2 mounting screws

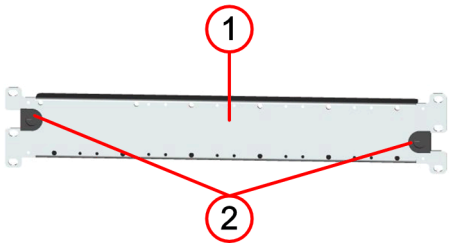

[dw_schiene-020414-01, 1, --_--]

Figure 3-9 Angle Rail

(1) Angle rail
(2) 2 rubber seals

3.1.4 Plug-In Module Assembly with Integrated Power Supply CB202

3.1.4.1 Description

The plug-in module assembly CB202 is a module with an internal power supply. The CB202 module is used in an expansion module. 3 plug-in module positions (M, N and P) are available for installation of plug-in modules. The plug-in modules can be installed in the following arrangements:

	Plug-In Module Position		
	M	N	P
Configured with 3 measuring-transducer modules	Measuring-transducer module	Measuring-transducer module	Measuring-transducer module
Configured with 2 measuring-transducer modules and 1 communication module	Measuring-transducer module	Measuring-transducer module	Communication module
	Measuring-transducer module	Communication module	Measuring-transducer module
Configured with 1 measuring-transducer module and 2 communication modules	Measuring-transducer module	Communication module	Communication module

Combinations that do not occupy all plug-in module positions are also possible.

NOTE

A communication module cannot be plugged into the plug-in module position M.

The CB202 module communicates with the base module using a communication connection. This communication connection is established with a special connecting cable. This connecting cable (CAT5 FTP patch cable) is always included in the scope of delivery of the CB202 module and need not be ordered separately.

The following 2 variants are available for the rated voltage range:

- DC 24 V to 48 V
- DC 60 V to DC 250 V and AC 100 V to AC 230 V (50 Hz and 60 Hz)

The CB202 PCB assembly assembly can be used in the 1st and 2nd device rows.

LEDs of the RJ45 Terminals

The light-emitting diodes (LEDs) signal the operating state of the communication connection. The operating states are explained in the following table:

COM Link (RJ45)	Signal	Color	Operating State
LED 1	CL2_LED0_N	Yellow	Flashes when a communication module is inserted in plug-in module position P.
LED 2	CL3_LED0_N	Green	Flashes when a communication module is inserted in plug-in module position N.

3.1.4.2 Terminals

Overview of Terminals

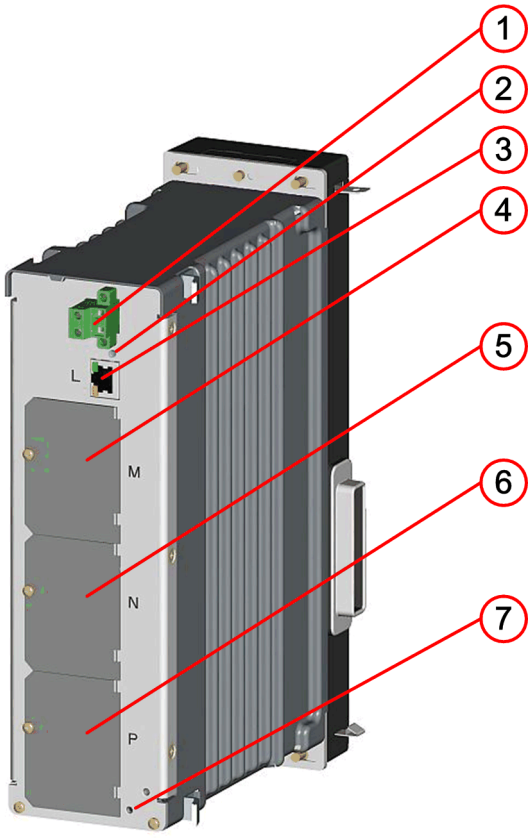

[dwcb202p-030211-01.tif, 1, --_--]

Figure 3-10 CB202 – Terminals

(1) 2-pole terminal to connect power supply
(2) LED: Power On
(3) COM link
(4) Plug-in module position M (measuring-transducer modules only)
(5) Plug-in module position N (for measuring-transducer or communication modules)
(6) Plug-in module position P (for measuring-transducer or communication modules)
(7) Grounding terminal

The Ethernet connection to the base module is established at the COM link terminal.
The 2-pole voltage terminal is used for the external power supply (see *Figure 3-12*).

Connection Diagram

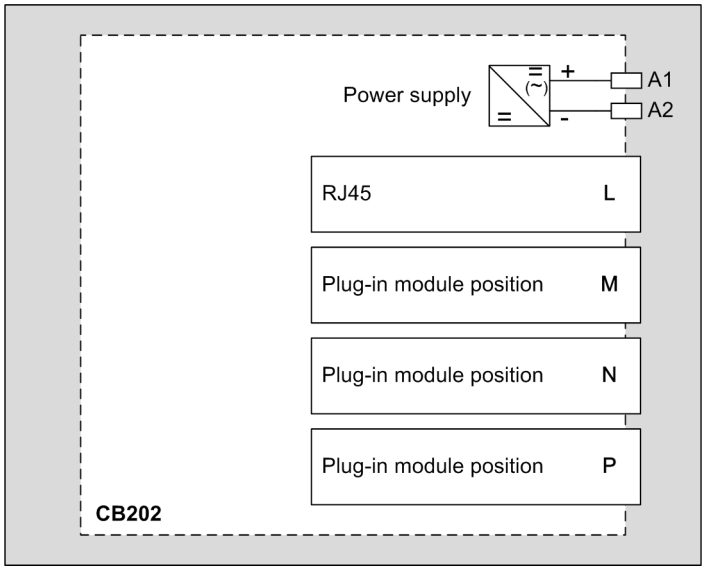

[tdcb202x-100713-01.tif, 2, en_US]

Figure 3-11 CB202 – Connection Diagram

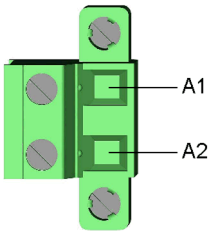

[dwkl2pol-030211-01.tif, 1, --_--]

Figure 3-12 Connection of External Power Supply

3.2 Input and Output Modules of the Modular Devices

3.2.1 Function Description of the Input and Output Modules of the Modular Devices

Module Designation	Function Description
IO201	• Input and output module • 4 current measuring inputs, 8 binary inputs, 6 binary outputs
IO202	• Input and output module • 4 current measuring inputs, 4 voltage measuring inputs, 8 binary inputs, 6 binary outputs
IO203	• Input and output module • 8 current measuring inputs, 4 binary inputs, 4 binary outputs
IO204	• Input and output module • 10 binary inputs, 4 binary outputs, 4 power relays for controlling 2 motors
IO205	• Input and output module • 12 binary inputs, 16 binary outputs
IO206	• Input and output module • 6 binary inputs, 7 binary outputs
IO207	• Input and output module • 16 binary inputs, 8 binary outputs
IO208	• Input and output module • 4 current measuring inputs, 4 voltage measuring inputs, 4 binary inputs, 11 binary outputs
IO209	• Input and output module • 8 binary inputs, 4 high-speed binary outputs (semiconductor accelerated)
IO210	• Input and output module • 4 current measuring inputs, 3 voltage measuring inputs, 4 high-speed measuring-transducer inputs for current or voltage, 7 binary outputs
IO211	• Input and output module • 8 voltage inputs, 8 binary inputs
IO212	• Input and output module • 8 high-speed measuring-transducer inputs for current or voltage, 8 binary inputs
IO214	• Input and output module • 4 current measuring inputs, 4 voltage measuring inputs, 2 binary inputs, 5 binary outputs
IO215	• Input and output module • 4 current measuring inputs, 4 voltage measuring inputs (measuring range: 7.07 V), 8 binary inputs, 6 binary outputs
IO230	• Input module • 48 binary inputs
IO231	• Input and output module • 24 binary inputs • 24 binary outputs
PB201	• Process-bus module • 7 LC Duplex interfaces of which 1 is a service port

3.2.2 Input and Output Module IO201

3.2.2.1 Description

The terminals for the following are located on the input and output module IO201:

- 4 current transformers (optionally protection-class current transformers or instrument transformers)
- 8 binary inputs
- 6 binary outputs, of which:
  - 4 high-speed make contacts (type F)
  - 2 high-speed change-over contacts (type F)

The connections are distributed over:

- 1 x 8-pole current terminal
- 3 x 14-pole voltage terminal

3.2.2.2 Terminals

Overview of Terminals

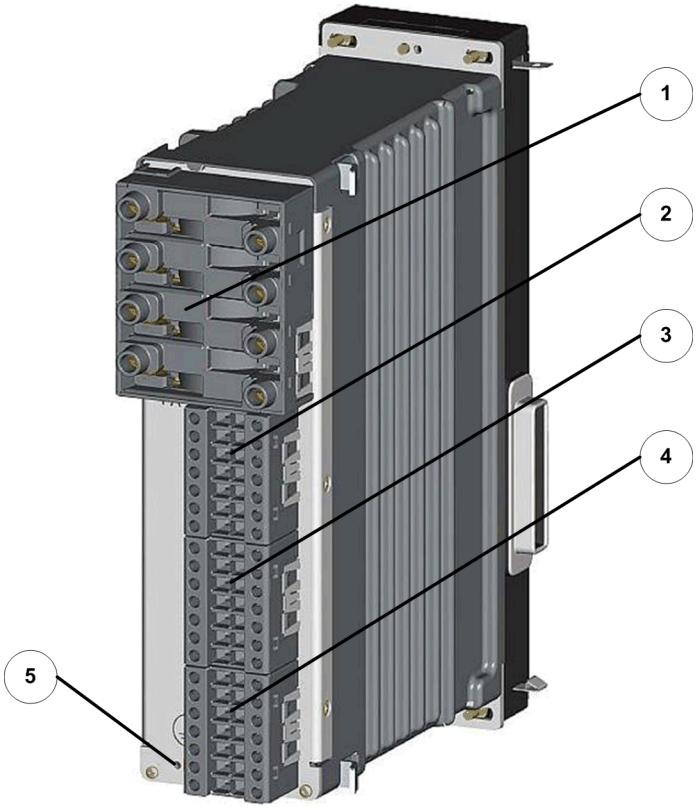

[dwio201p-030211-01.tif, 1, --_--]

Figure 3-13 IO201 – Terminals

(1) Current terminal xA
(2) Voltage terminal xB
(3) Voltage terminal xC
(4) Voltage terminal xD
(5) Grounding terminal

NOTE

x corresponds to the slot in the 19-inch rack.

Terminal and Connection Diagram

For the binary inputs and outputs, the x corresponds to the slot in the 19-inch rack.

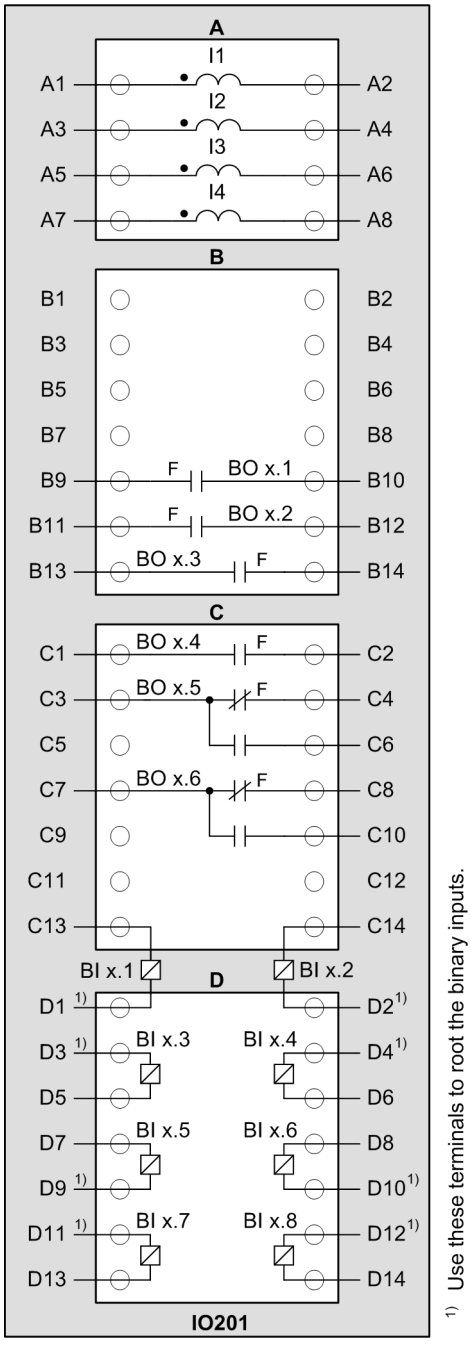

[cdio201x-290812-01.tif, 1, en_US]

Figure 3-14 IO201 – Terminal Diagram

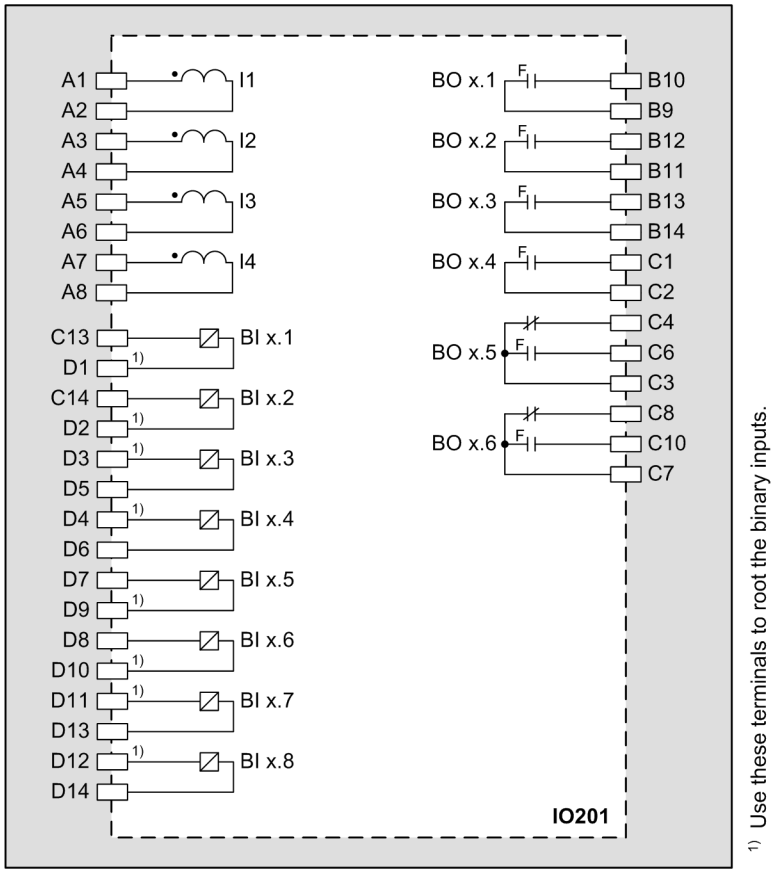

[tdio201x-290812-01.tif, 1, en_US]

Figure 3-15 IO201 – Connection Diagram

3.2.3 Input and Output Module IO202

3.2.3.1 Description

This input and output module is used as the base measurement module in all protection devices and bay units. One device can contain several IO202 input and output modules. The number of IO202 input and output modules depends on the measured values required. Up to 40 measuring channels are possible for each SIPROTEC device.

The terminals for the following are located on the input and output module IO202:

- 4 current transformers (optionally protection-class current transformers or instrument transformers)
- 4 voltage transformers
- 8 binary inputs
- 6 binary outputs, of which:
  - 4 high-speed make contacts (type F)
  - 2 high-speed change-over contacts (type F)

The connections are distributed over:

- 1 x 8-pole current terminal
- 3 x 14-pole voltage terminal

3.2.3.2 Terminals

Overview of Terminals

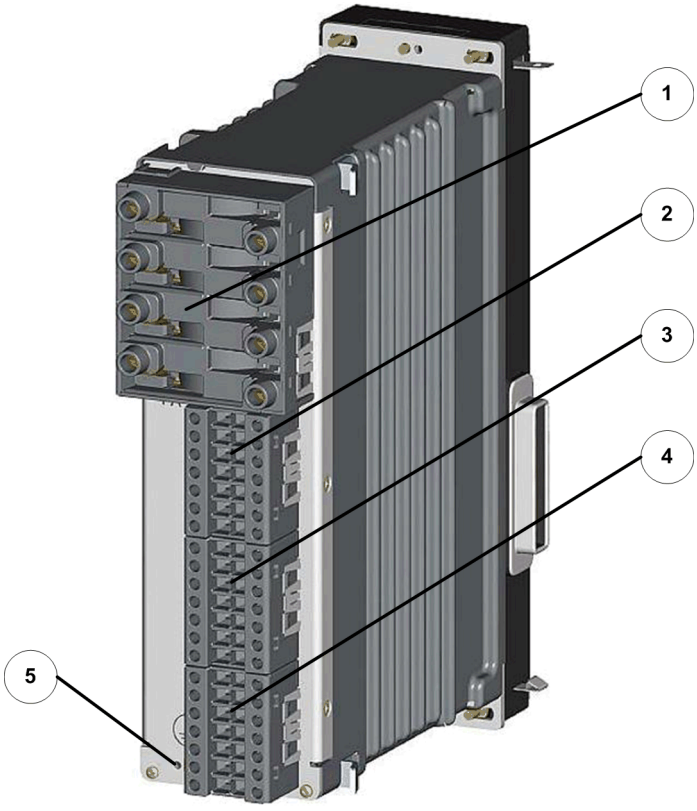

[dwio202p-030211-01.tif, 1, --_--]

Figure 3-16 IO202 – Terminals

(1) Current terminal xA
(2) Voltage terminal xB
(3) Voltage terminal xC
(4) Voltage terminal xD
(5) Grounding terminal

NOTE

x corresponds to the slot in the 19-inch rack.

Terminal and Connection Diagram

For the binary inputs and outputs, the x corresponds to the slot in the 19-inch rack.

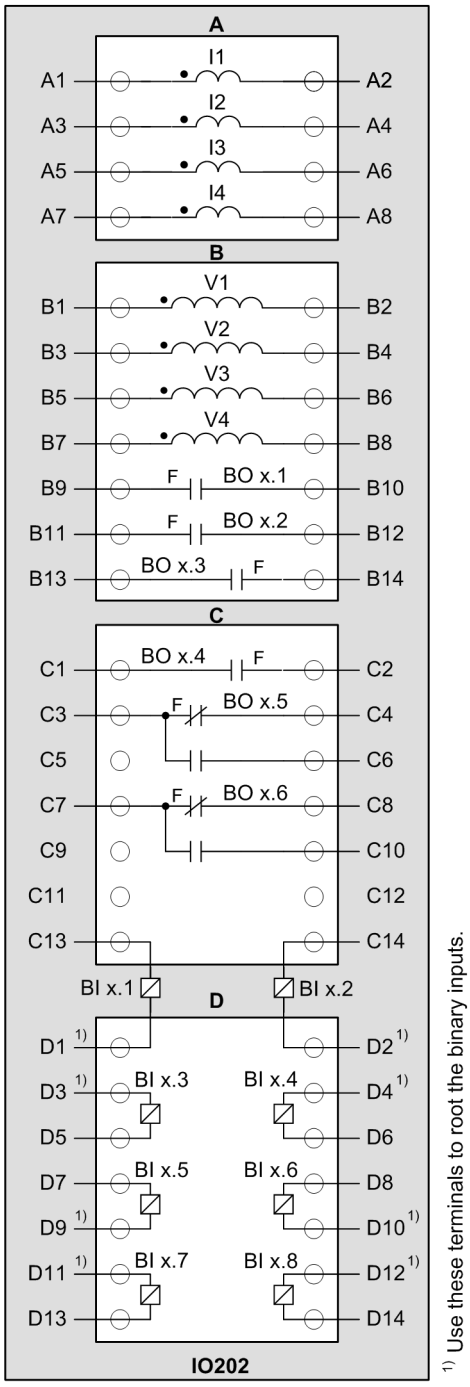

[cdio202x-300812-01.tif, 1, en_US]

Figure 3-17 IO202 – Terminal Diagram

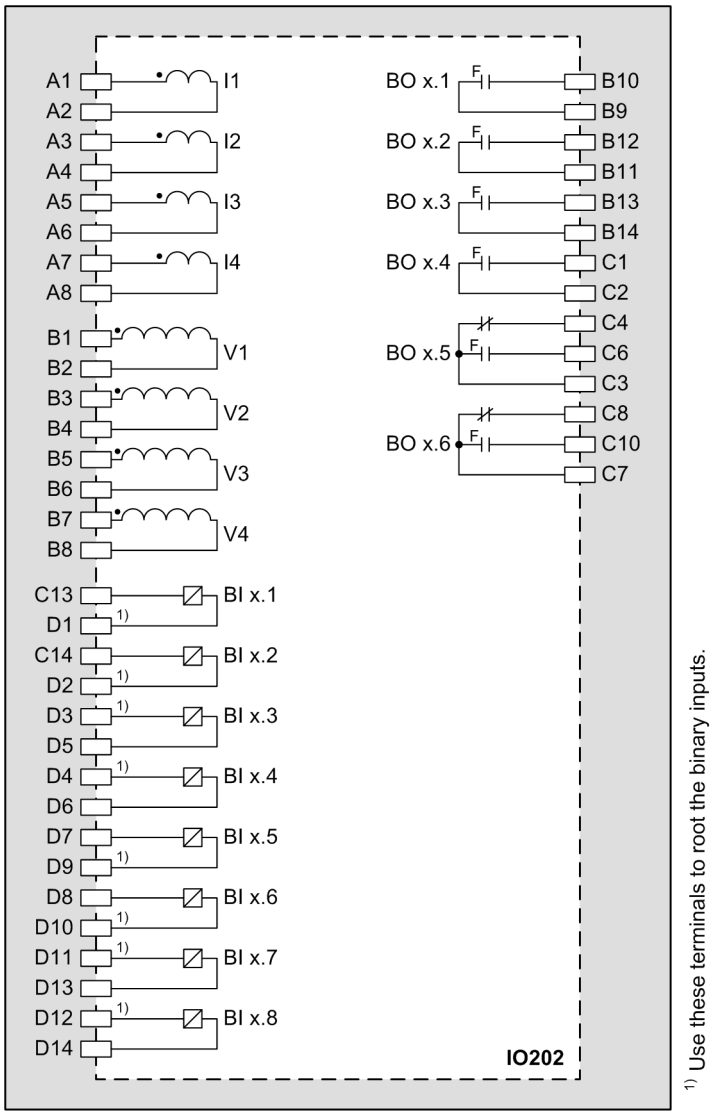

[tdio202x-240812-01.tif, 1, en_US]

Figure 3-18 IO202 – Connection Diagram

3.2.4 Input and Output Module IO203

3.2.4.1 Description

The terminals for the following are located on the input and output module IO203:

- 8 current transformers (optionally protection-class current transformers or instrument transformers)
- 4 binary inputs (2 binary inputs each with common connection)
- 4 binary outputs with 4 high-speed make contacts (type F)

The connections are distributed over:

- 2 x 8-pole current terminal
- 1 x 14-pole voltage terminal

3.2.4.2 Terminals

Overview of Terminals

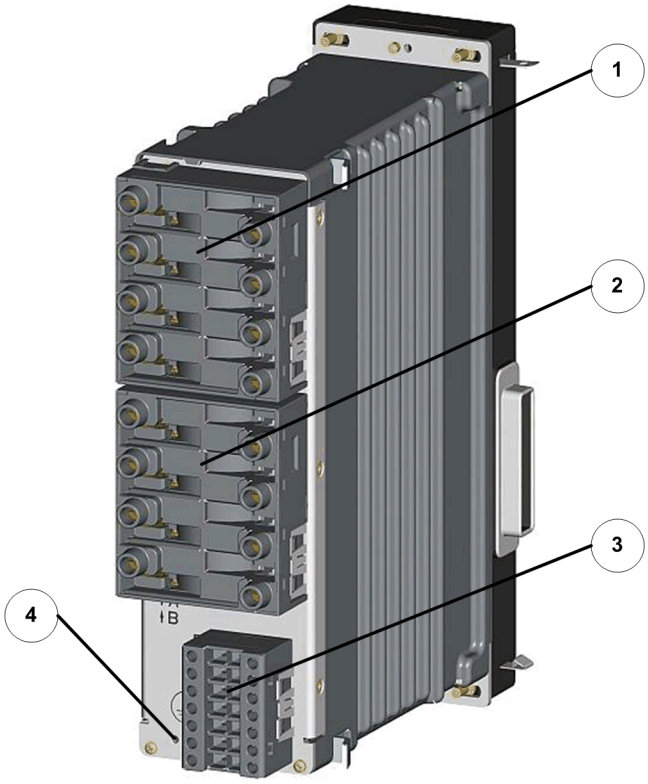

[dwio203p-030211-01.tif, 1, --_--]

Figure 3-19 IO203 – Terminals

(1) Current terminal xA
(2) Current terminal xB
(3) Voltage terminal xD
(4) Grounding terminal

NOTE

x corresponds to the slot in the 19-inch rack.

Terminal and Connection Diagram

For the binary inputs and outputs, the x corresponds to the slot in the 19-inch rack.

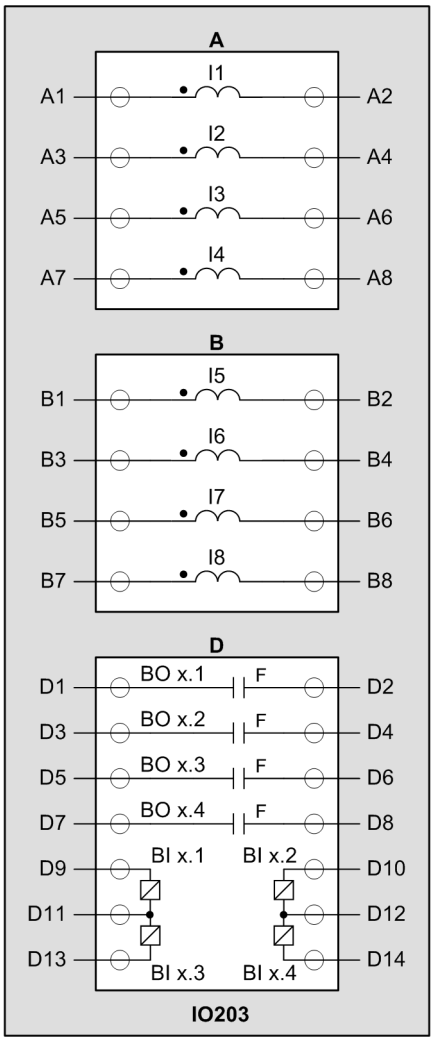

[cdio203x-280812-01.tif, 1, en_US]

Figure 3-20 IO203 – Terminal Diagram

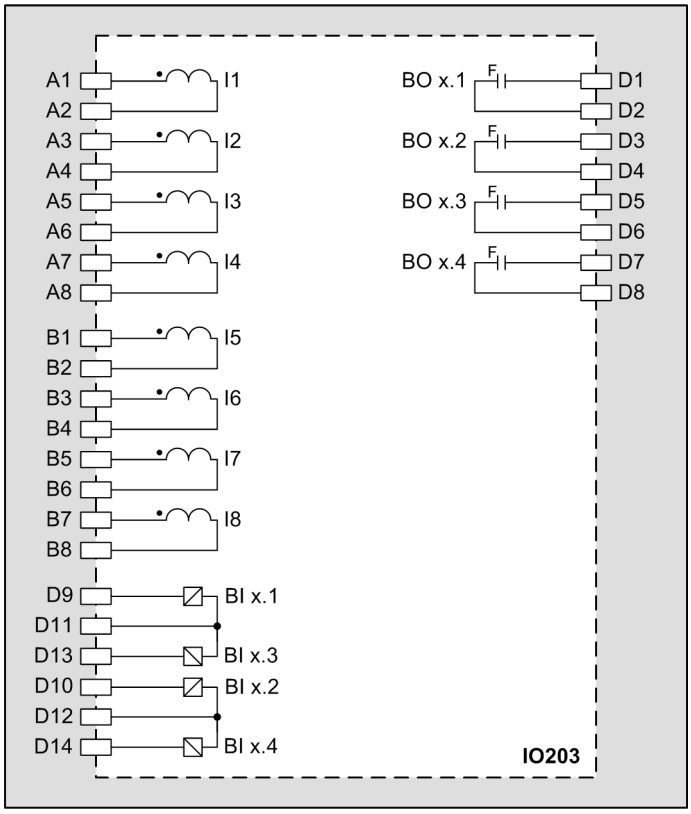

[tdio203x-110313-01.tif, 1, en_US]

Figure 3-21 IO203 – Connection Diagram

3.2.5 Input and Output Module IO204

3.2.5.1 Description

The terminals for the following are located on the input and output module IO204:

- 10 binary inputs
- 4 binary outputs with 4 standard make contacts (type S)
- 4 power relays for controlling 2 motors (forward/backward) with a common auxiliary voltage supply V_{aux}+, V_{aux}-

  The power relays operate in interlocked mode, that is, only one relay of each switching pair picks up at a time thereby avoiding a power-supply short circuit. Note the polarity specified in the terminal and connection diagram.

The connections are distributed over three 14-pole voltage terminals.

3.2.5.2 Terminals

Overview of Terminals

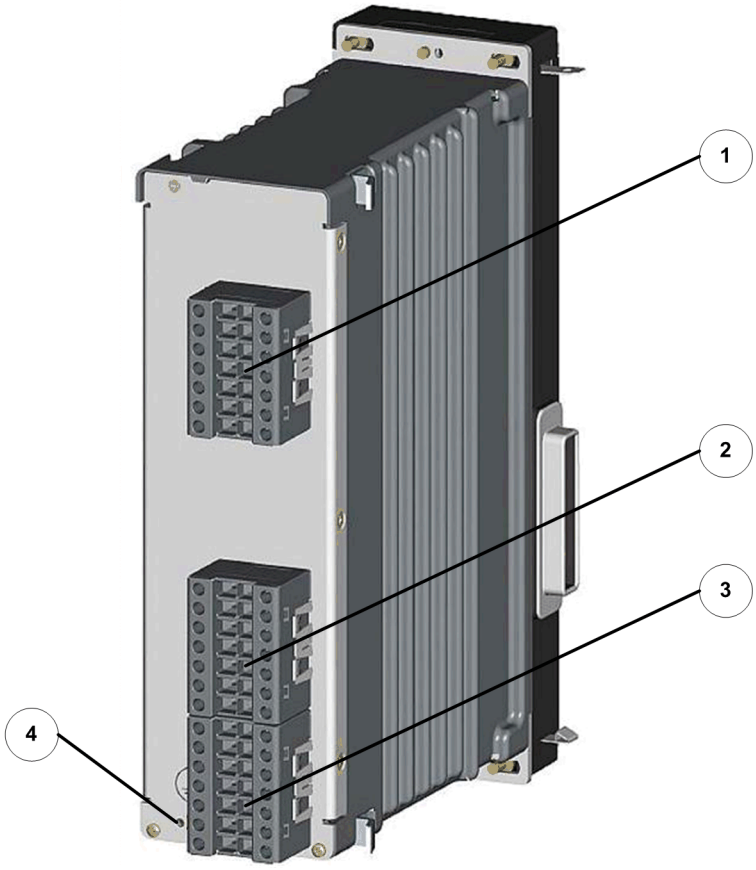

[dwio204p-201112-01.tif, 1, --_--]

Figure 3-22 IO204 – Terminals

(1) Voltage terminal xA
(2) Voltage terminal xC
(3) Voltage terminal xD
(4) Grounding terminal

NOTE

x corresponds to the slot in the 19-inch rack.

Terminal and Connection Diagram

For the binary inputs and outputs, the x corresponds to the slot in the 19-inch rack.

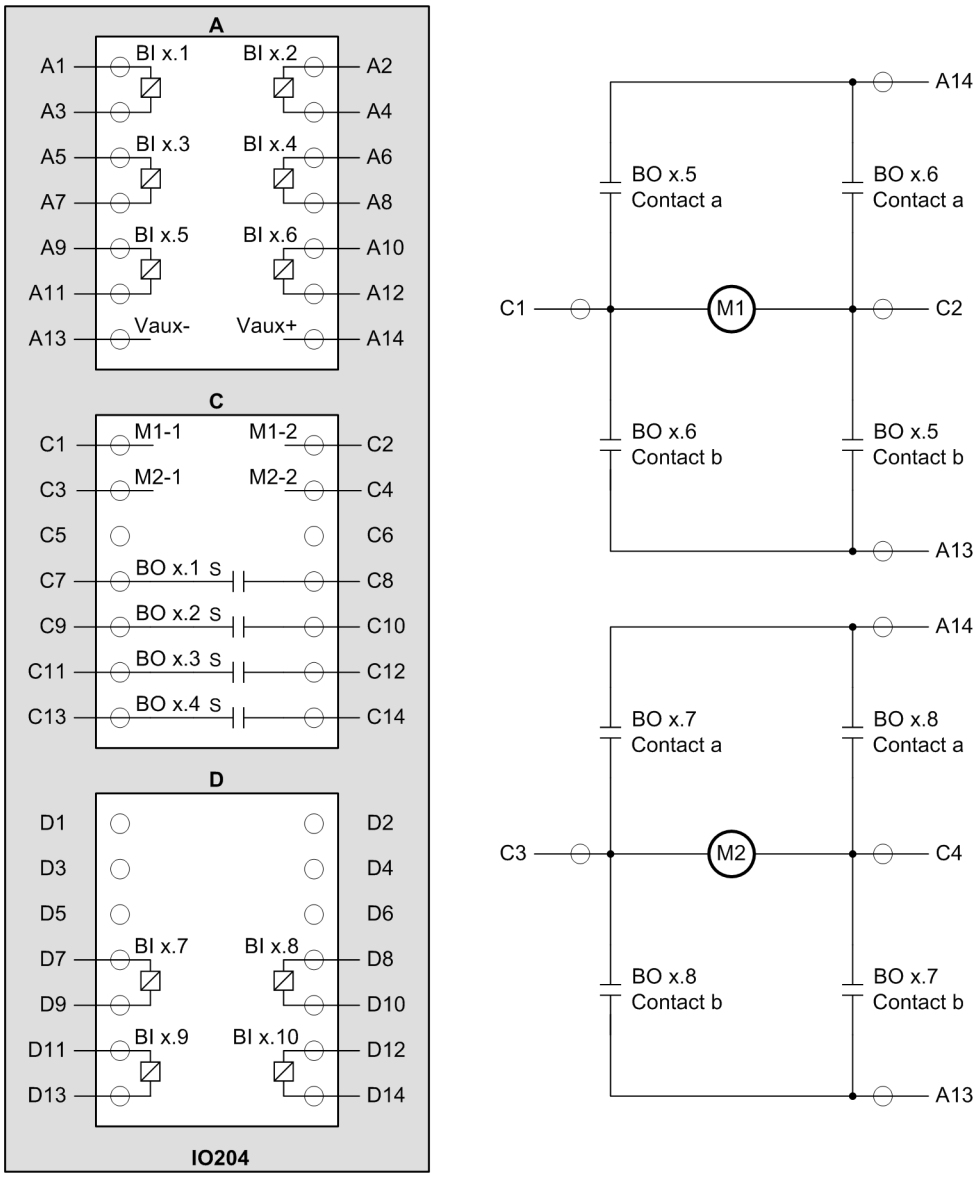

[cdio204x-201112-01.tif, 1, en_US]

Figure 3-23 IO204 – Terminal Diagram

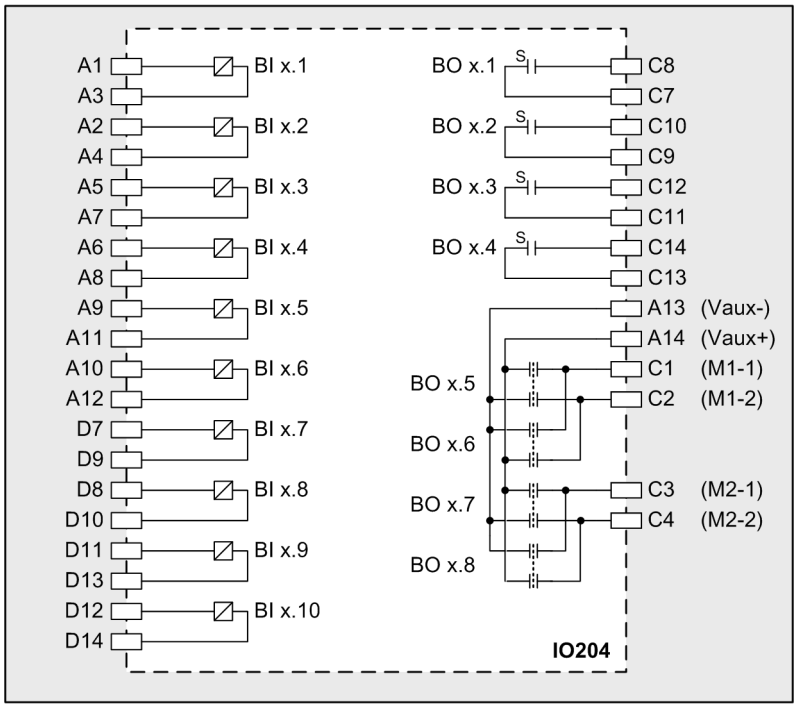

[tdio204x-201112-01.tif, 1, en_US]

Figure 3-24 IO204 – Connection Diagram

3.2.6 Input and Output Module IO205

3.2.6.1 Description

The terminals for the following are located on the input and output module IO205:

- 12 binary inputs
- 16 binary outputs with 16 standard make contacts (type S)

The connections are distributed over four 14-pole voltage terminals.

3.2.6.2 Terminals

Overview of Terminals

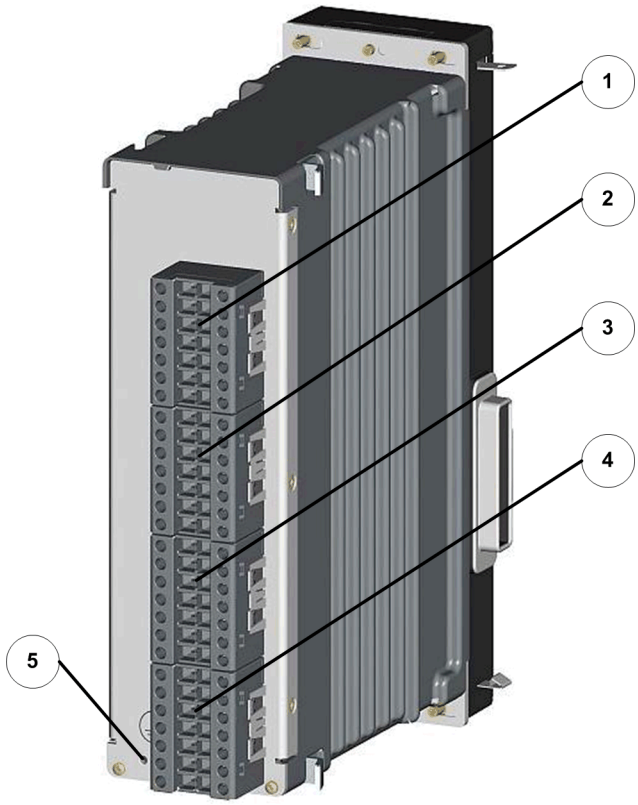

[dwio205p-030211-01.tif, 1, --_--]

Figure 3-25 IO205 – Terminals

(1) Voltage terminal xA
(2) Voltage terminal xB
(3) Voltage terminal xC
(4) Voltage terminal xD
(5) Grounding terminal

NOTE

x corresponds to the slot in the 19-inch rack.

Terminal and Connection Diagram

For the binary inputs and outputs, the x corresponds to the slot in the 19-inch rack.

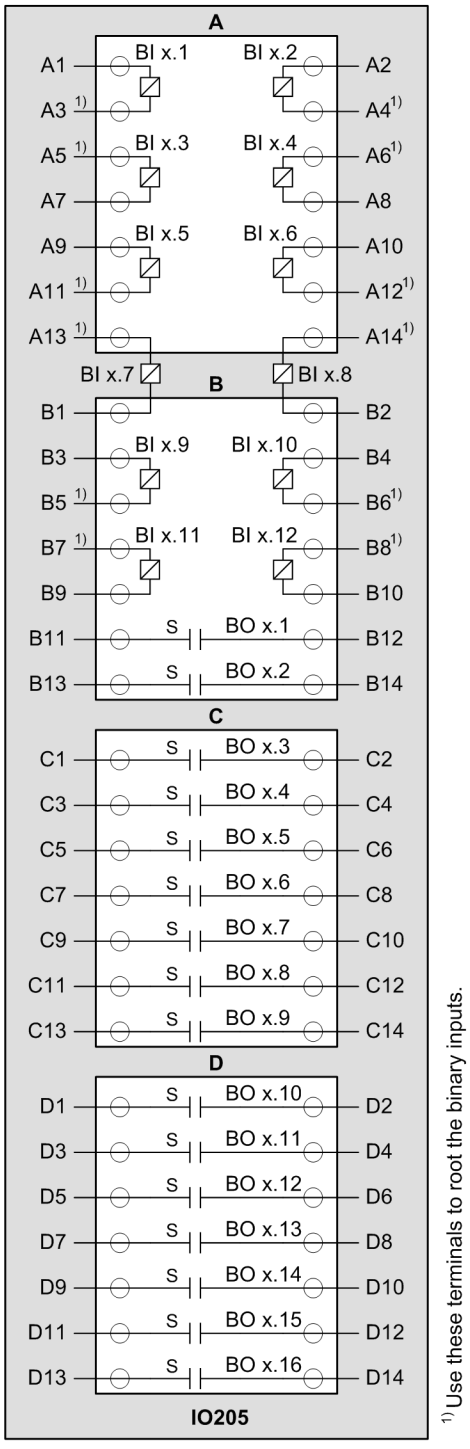

[cdio205x-260213-01.tif, 1, en_US]

Figure 3-26 IO205 – Terminal Diagram

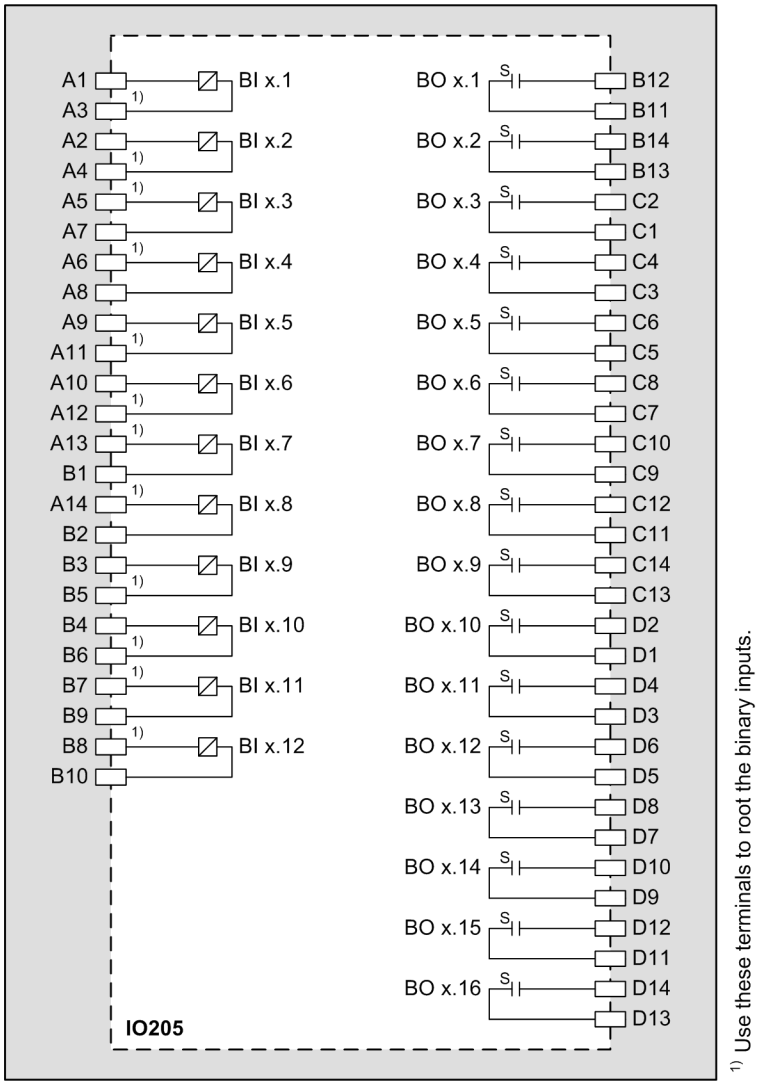

[tdio205x-240812-01.tif, 1, en_US]

Figure 3-27 IO205 – Connection Diagram

3.2.7 Input and Output Module IO206

3.2.7.1 Description

The terminals for the following are located on the input and output module IO206:

- 6 binary inputs
- 7 binary outputs with 7 standard make contacts (type S)

The connections are distributed over two 14-pole voltage terminals.

3.2.7.2 Terminals

Overview of Terminals

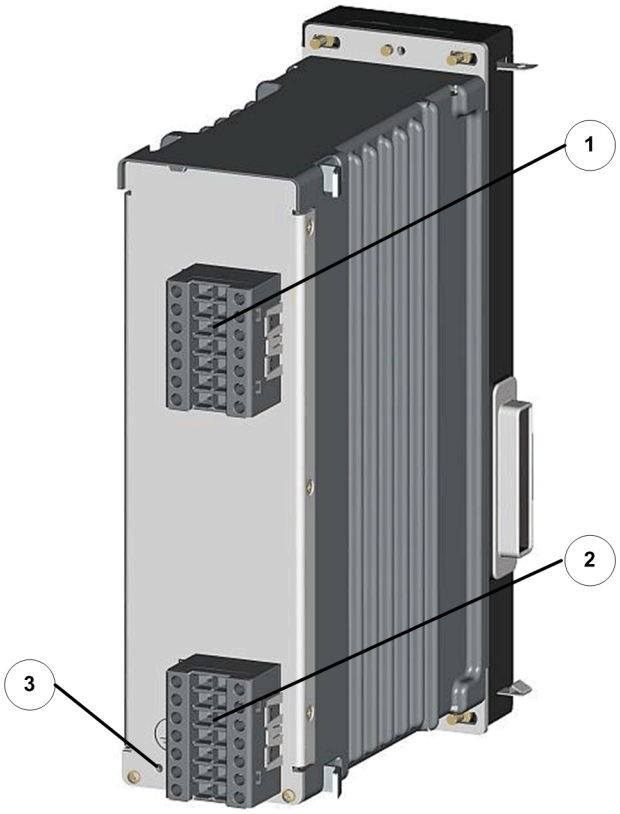

[dwio206p-030211-01.tif, 1, --_--]

Figure 3-28 IO206 – Terminals

(1) Voltage terminal xA
(2) Voltage terminal xD
(3) Grounding terminal

NOTE

x corresponds to the slot in the 19-inch rack.

Terminal and Connection Diagram

For the binary inputs and outputs, the x corresponds to the slot in the 19-inch rack.

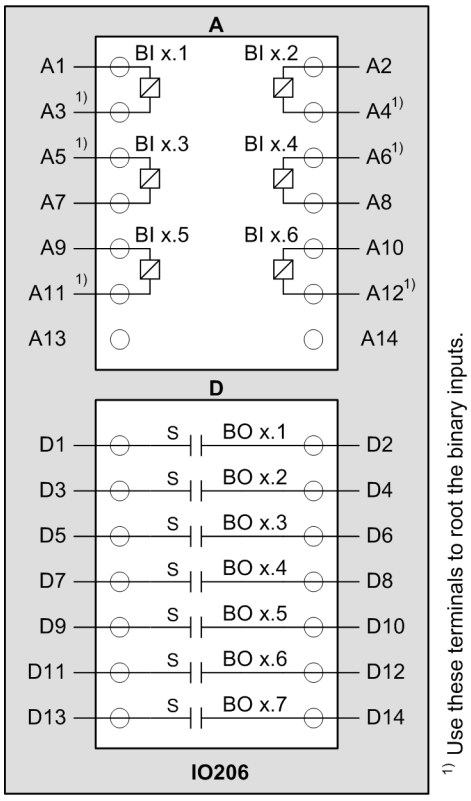

[cdio206x-280812-01.tif, 1, en_US]

Figure 3-29 IO206 – Terminal Diagram

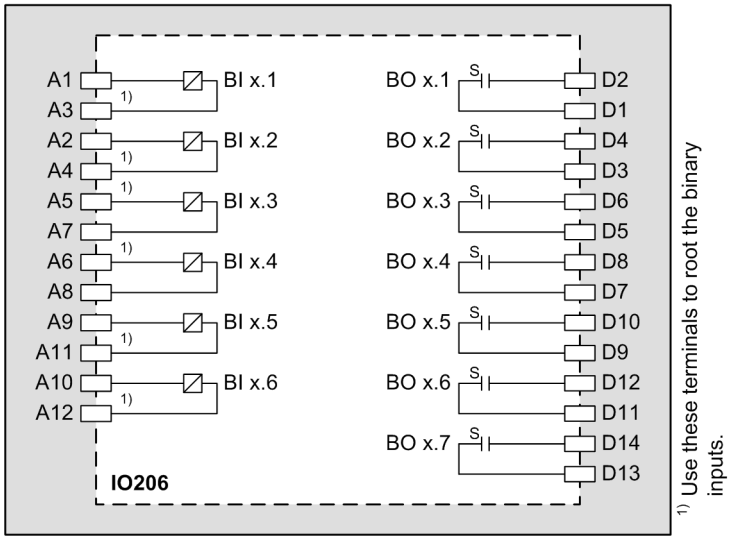

[tdio206x-050313-02.tif, 1, en_US]

Figure 3-30 IO206 – Connection Diagram

3.2.8 Input and Output Module IO207

3.2.8.1 Description

The terminals for the following are located on the input and output module IO207:

- 16 binary inputs
- 8 binary outputs with 8 standard make contacts (type S)

The connections are distributed over four 14-pole voltage terminals.

3.2.8.2 Terminals

Overview of Terminals

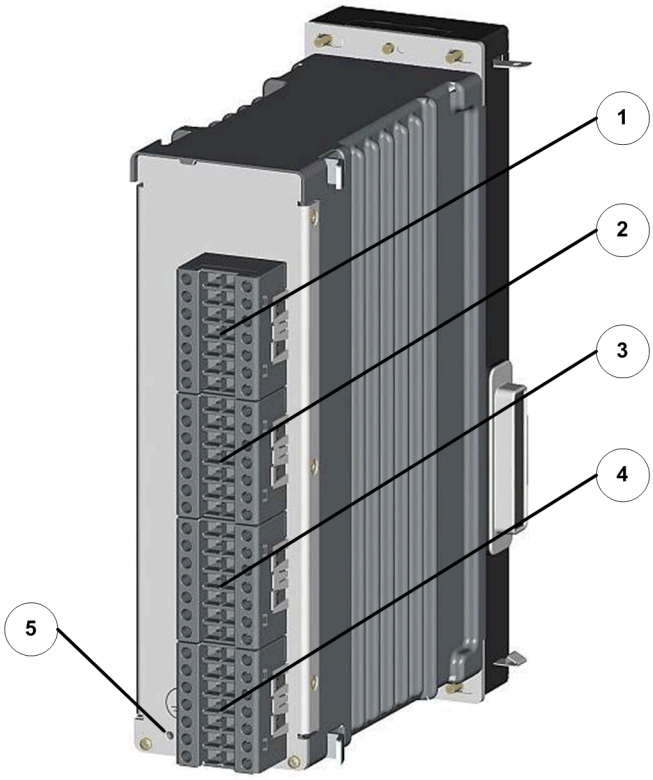

[dwio207p-030211-01.tif, 1, --_--]

Figure 3-31 IO207 – Terminals

(1) Voltage terminal xA
(2) Voltage terminal xB
(3) Voltage terminal xC
(4) Voltage terminal xD
(5) Grounding terminal

NOTE

x corresponds to the slot in the 19-inch rack.

Terminal and Connection Diagram

For the binary inputs and outputs, the x corresponds to the slot in the 19-inch rack.

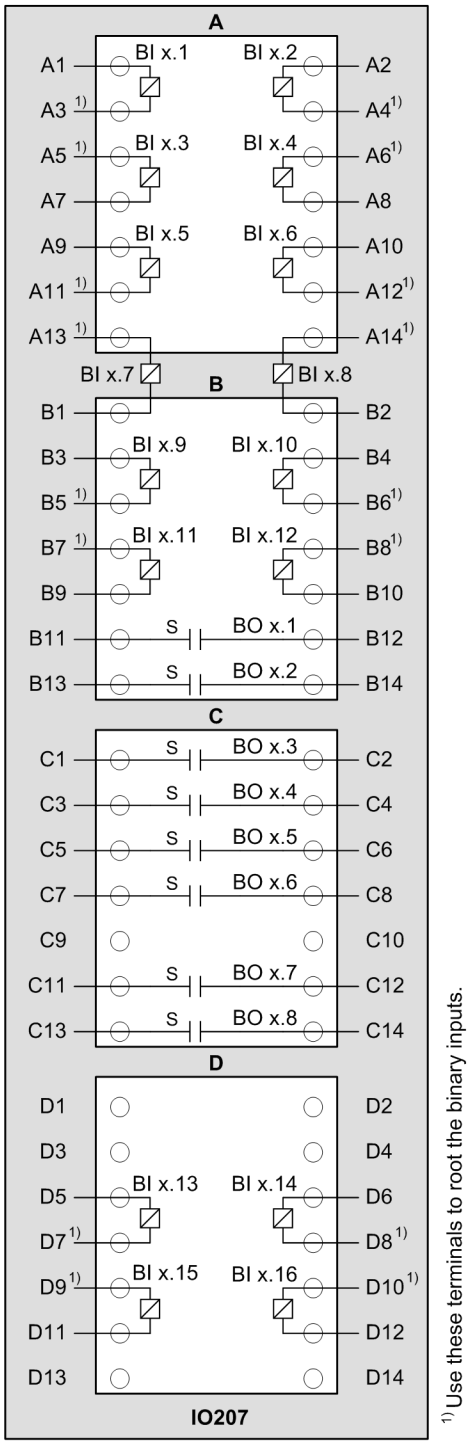

[cdio207x-260213-01.tif, 1, en_US]

Figure 3-32 IO207 – Terminal Diagram

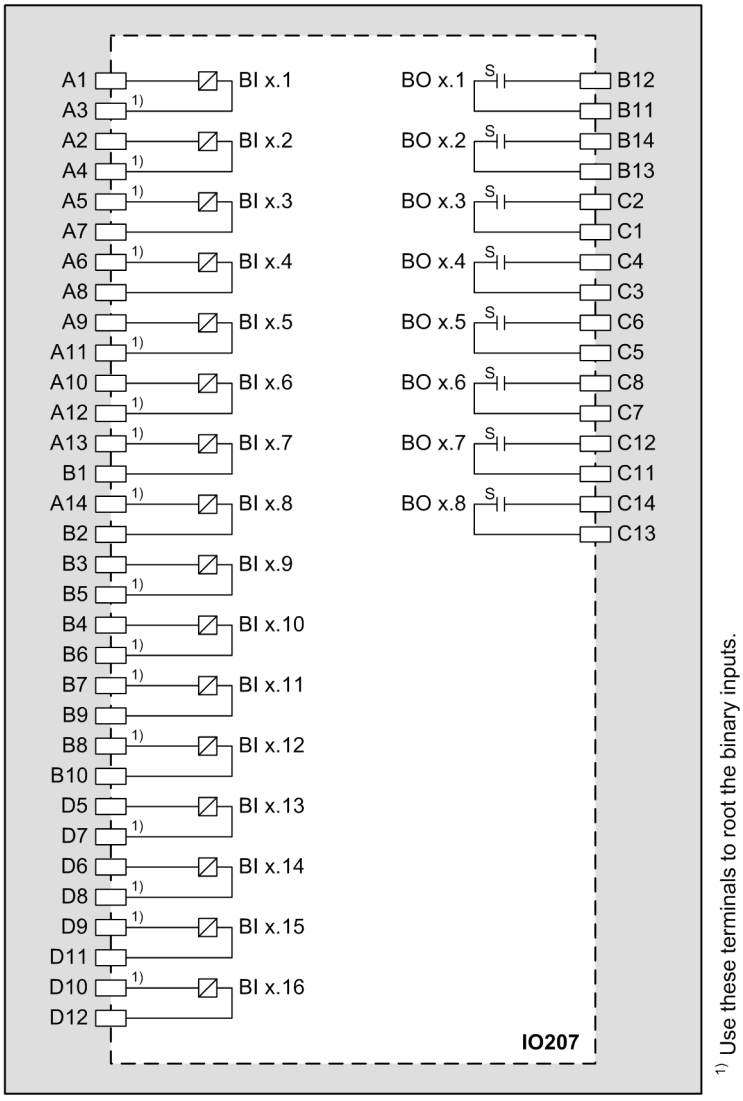

[tdio207x-300812-01.tif, 1, en_US]

Figure 3-33 IO207 – Connection Diagram

3.2.9 Input and Output Module IO208

3.2.9.1 Description

The terminals for the following are located on the input and output module IO208:

- 4 current transformers (optionally protection-class current transformers or instrument transformers)
- 4 voltage transformers
- 4 binary inputs
- 11 binary outputs with 3 standard make contacts (type S), 6 high-speed make contacts (type F), and 2 high-speed change-over contacts (type F)

The connections are distributed over:

- 1 x 8-pole current terminal block
- 3 x 14-pole voltage terminal blocks

3.2.9.2 Terminals

Overview of Terminals

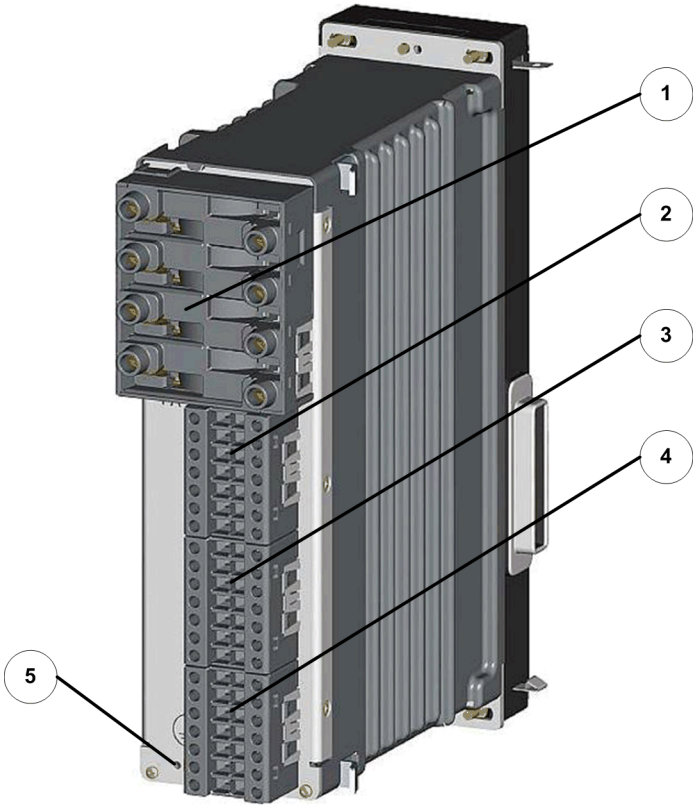

[dwio208p-030211-01.tif, 1, --_--]

Figure 3-34 IO208 – Terminals

(1) Current terminal xA [1]
(2) Voltage terminal xB [1]
(3) Voltage terminal xC [1]
(4) Voltage terminal xD [1]
(5) Grounding terminal

[1] x corresponds to the slot in the 19-inch rack.

Terminal and Connection Diagram

For the binary inputs and outputs, the x corresponds to the slot in the 19-inch rack.

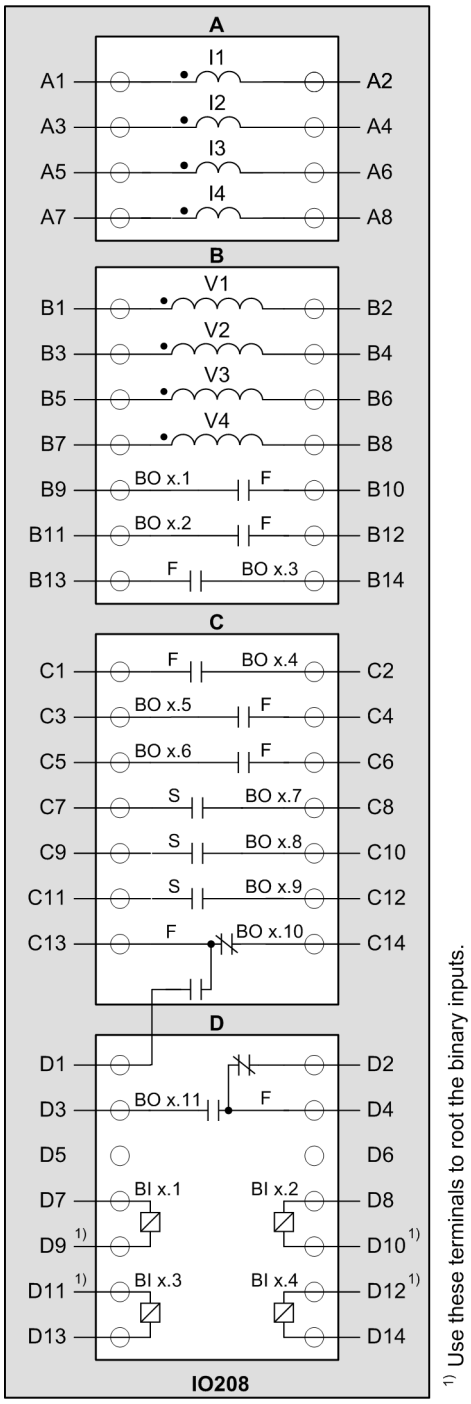

[cdio208x-050313-01.tif, 3, en_US]

Figure 3-35 IO208 – Terminal Diagram

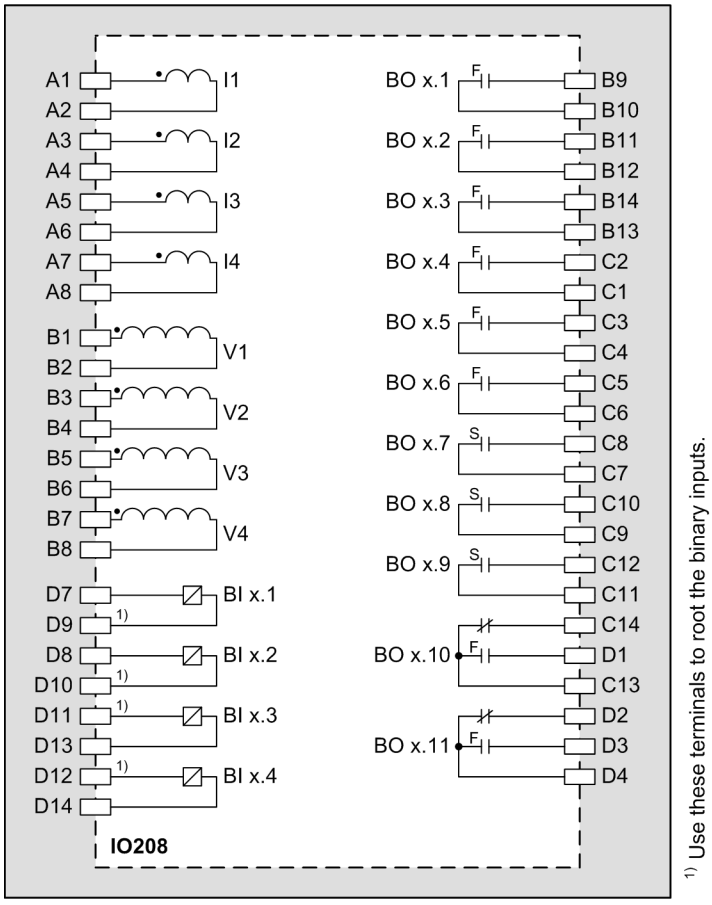

[tdio208x-300812-01.tif, 1, en_US]

Figure 3-36 IO208 – Connection Diagram

3.2.10 Input and Output Module IO209

3.2.10.1 Description

The terminals for the following are located on the input and output module IO209:

- 8 binary inputs
- 4 binary outputs with semiconductor-accelerated make contacts (type HS)

The connections are distributed over three 14-pole voltage terminals.

3.2.10.2 Terminals

Overview of Terminals

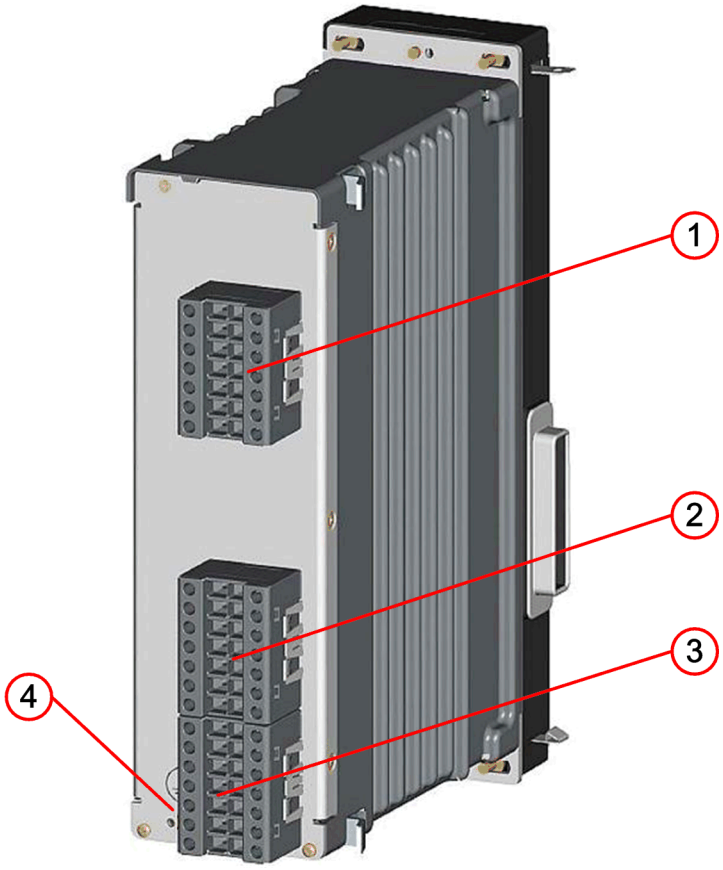

[dwio209p-030211-01.tif, 1, --_--]

Figure 3-37 IO209 – Terminals

(1) Voltage terminal xA
(2) Voltage terminal xC
(3) Voltage terminal xD
(4) Grounding terminal

NOTE

x corresponds to the slot in the 19-inch rack.

Terminal and Connection Diagram

For the binary inputs and outputs, the x corresponds to the slot in the 19-inch rack.

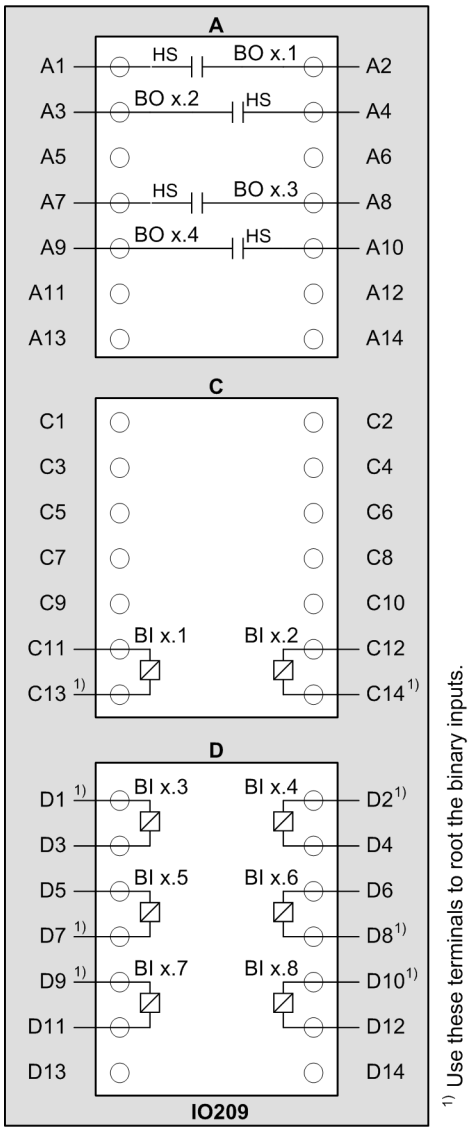

[cdio209x-110313-01.tif, 1, en_US]

Figure 3-38 IO209 – Terminal Diagram

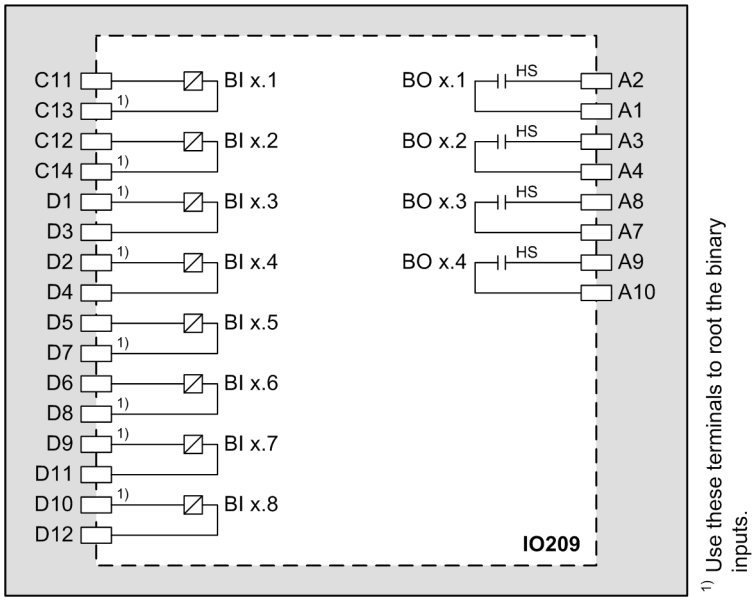

[tdio209x-270812-01.tif, 1, en_US]

Figure 3-39 IO209 – Connection Diagram

3.2.11 Input and Output Module IO210

3.2.11.1 Description

The terminals for the following are located on the input and output module IO210:

- 4 current transformers (optionally protection-class current transformers or instrument transformers)
- 3 voltage transformers
- 4 high-speed measuring transducer inputs for current (20 mA) or voltage (10 V)
- 7 binary outputs, of which:
  - 1 standard make contact (type S)
  - 4 high-speed make contacts (type F)
  - 2 standard change-over contacts (type S)

The connections are distributed over:

- 1 x 8-pole current terminal
- 3 x 14-pole voltage terminal

3.2.11.2 Connections

Overview of Terminals

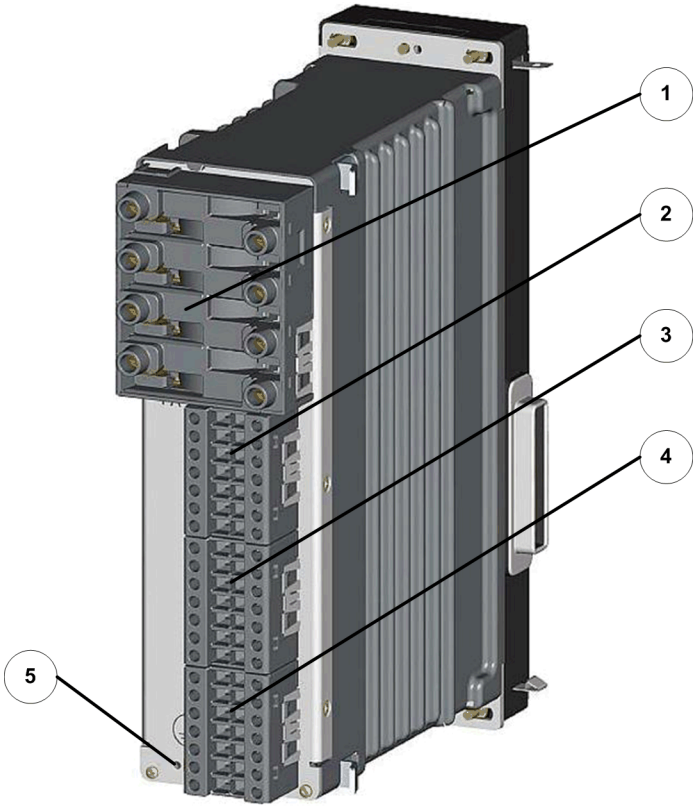

[dw_io210p, 1, --_--]

Figure 3-40 IO210 – Terminals

(1) Current terminal xA
(2) Voltage terminal xB
(3) Voltage terminal xC
(4) Voltage terminal xD
(5) Protective grounding terminal

NOTE

x corresponds to the slot in the 19-inch rack.

Terminal and Connection Diagram

For the binary inputs and outputs, the x corresponds to the slot in the 19-inch rack.

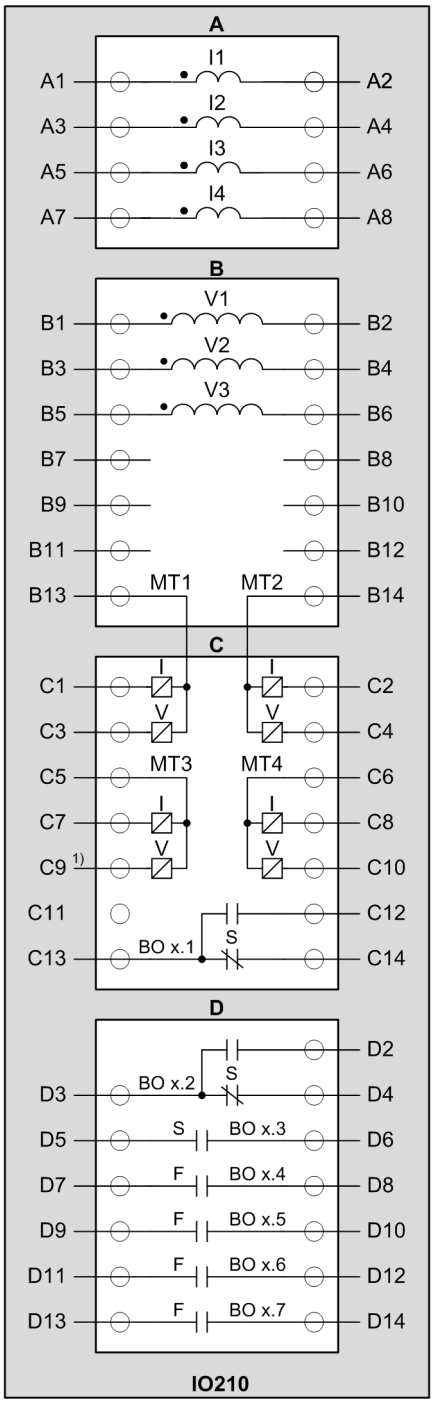

[cd_io210, 2, en_US]

Figure 3-41 IO210 – Terminal Diagram

(1) Voltage input MT3 with higher voltage immunity (maximum continuous voltage +/- 60 V)

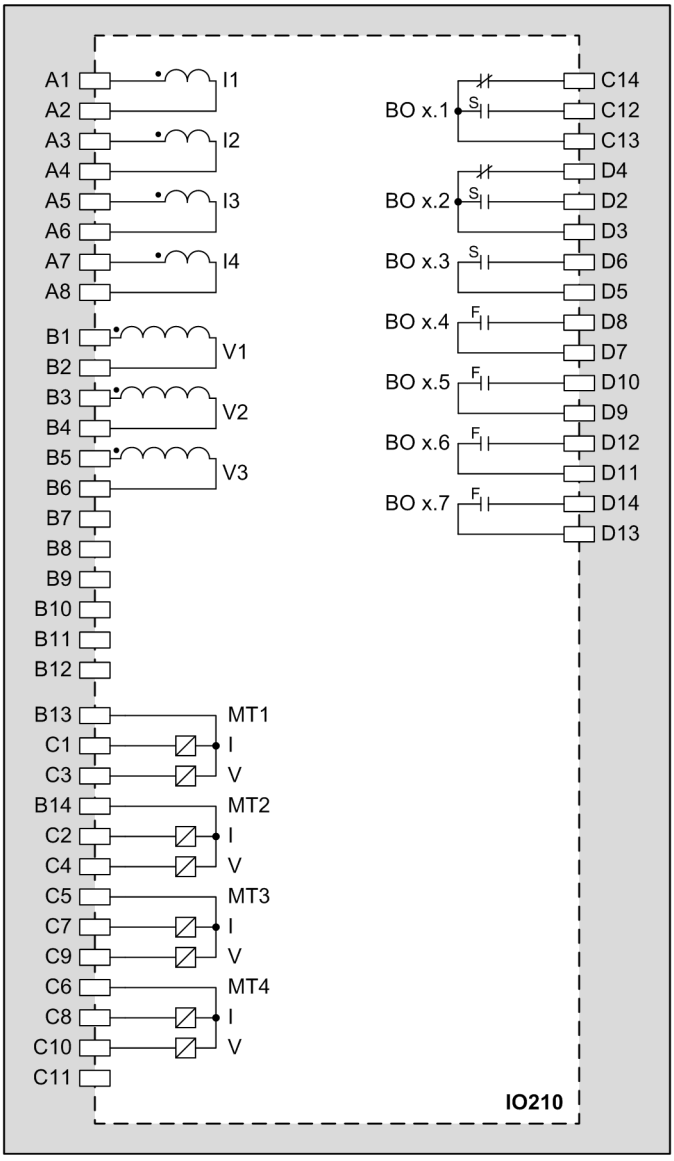

[td_io210, 2, en_US]

Figure 3-42 IO210 – Connection Diagram

3.2.12 Input and Output Module IO211

3.2.12.1 Description

The terminals for the following are located on the input and output module IO211:

- 8 voltage inputs
- 8 binary inputs

The connections are distributed over three 14-pole voltage terminals.

3.2.12.2 Terminals

Overview of Terminals

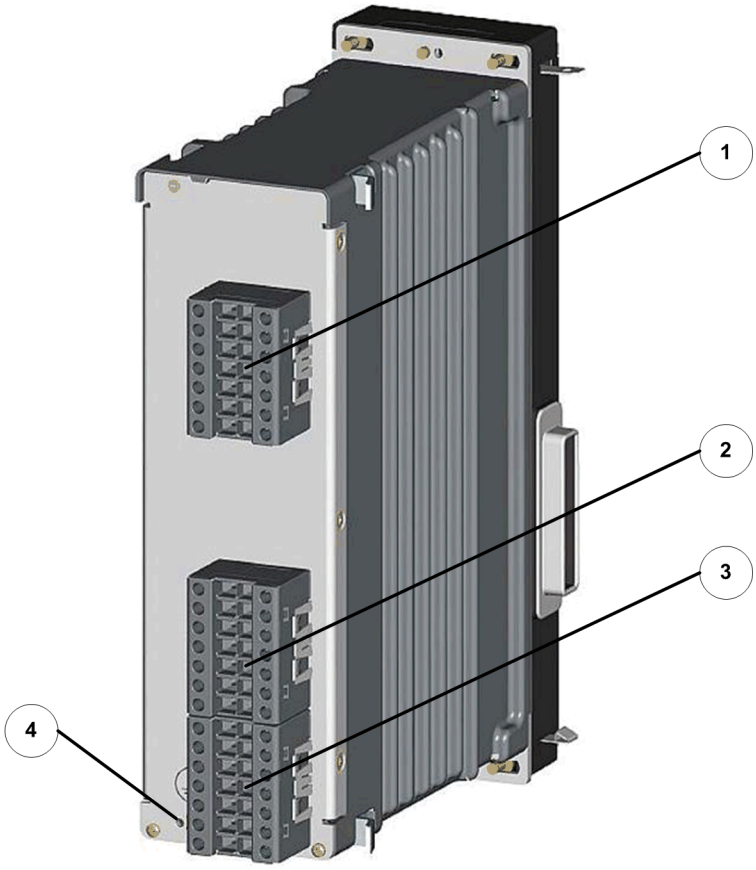

[dwio211p-211112-01.tif, 1, --_--]

Figure 3-43 IO211 Terminals

(1) Voltage terminal xA
(2) Voltage terminal xC
(3) Voltage terminal xD
(4) Grounding terminal

NOTE

x corresponds to the slot in the 19-inch rack.

Terminal and Connection Diagram

For the binary inputs and outputs, the x corresponds to the slot in the 19-inch rack.

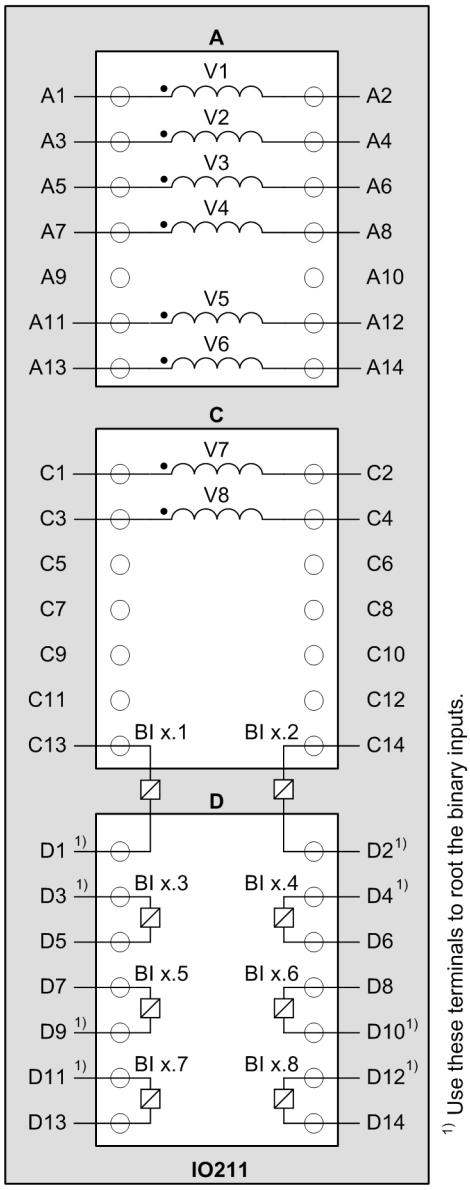

[cdio211x-221112-01.tif, 1, en_US]

Figure 3-44 IO211 Terminal Diagram

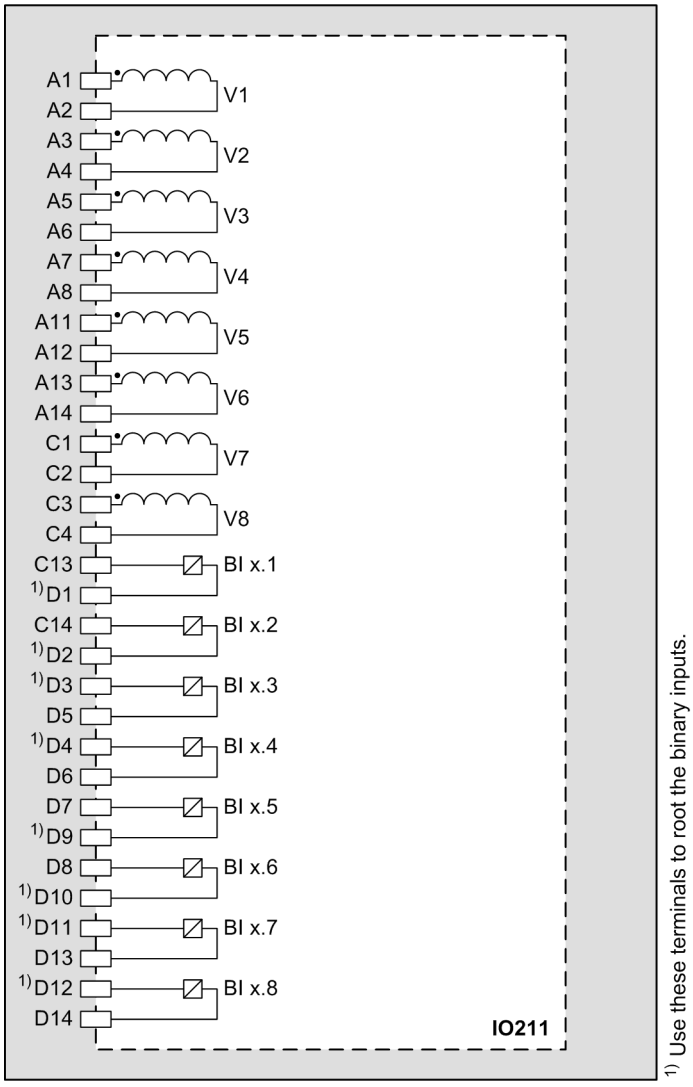

[tdio211x-211112-01.tif, 1, en_US]

Figure 3-45 IO211 Connection Diagram

3.2.13 Input and Output Module IO212

3.2.13.1 Description

The terminals for the following are located on the input and output module IO212:

- 8 high-speed measuring-transducer inputs for current (20 mA) or voltage (10 V)
- 8 binary inputs

The connections are distributed over three 14-pole voltage terminals.

3.2.13.2 Terminals

Overview of Terminals

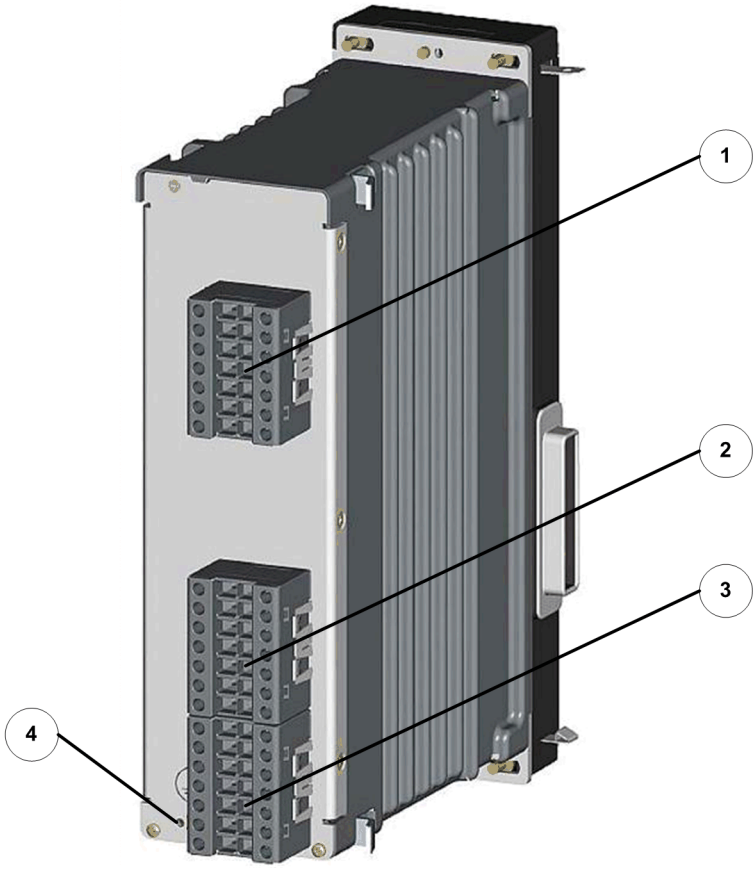

[dwio204p-201112-01.tif, 1, --_--]

Figure 3-46 IO212 – Terminals

(1) Voltage terminal xA
(2) Voltage terminal xC
(3) Voltage terminal xD
(4) Grounding terminal

NOTE

x corresponds to the slot in the 19-inch rack.

Terminal and Connection Diagram

For the binary inputs and outputs, the x corresponds to the slot in the 19-inch rack.

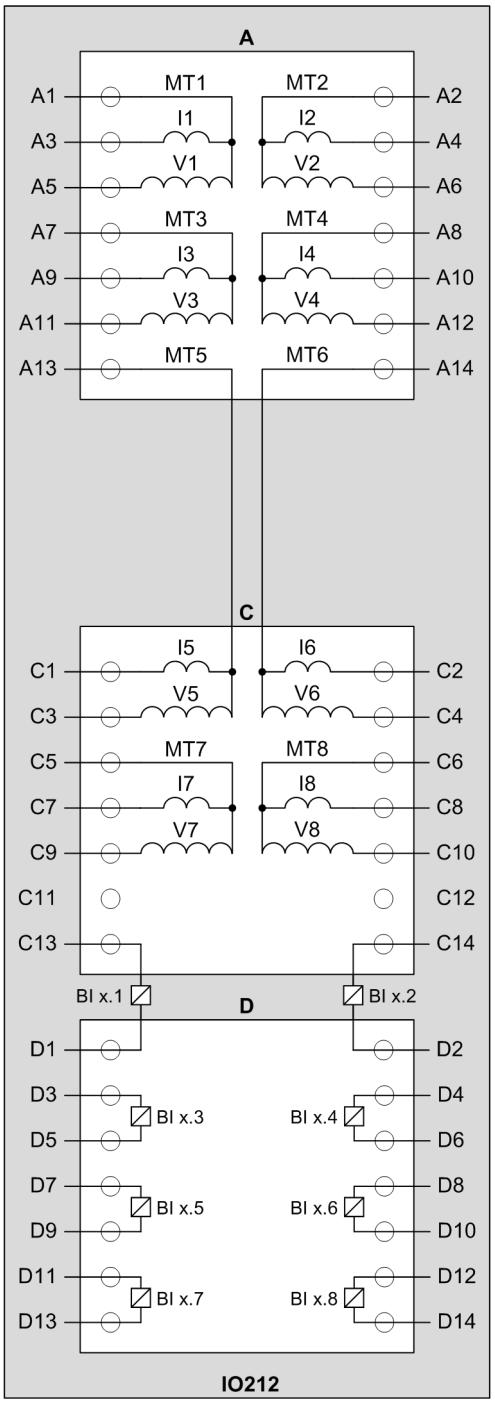

[cd_io212, 1, en_US]

Figure 3-47 IO212 – Terminal Diagram

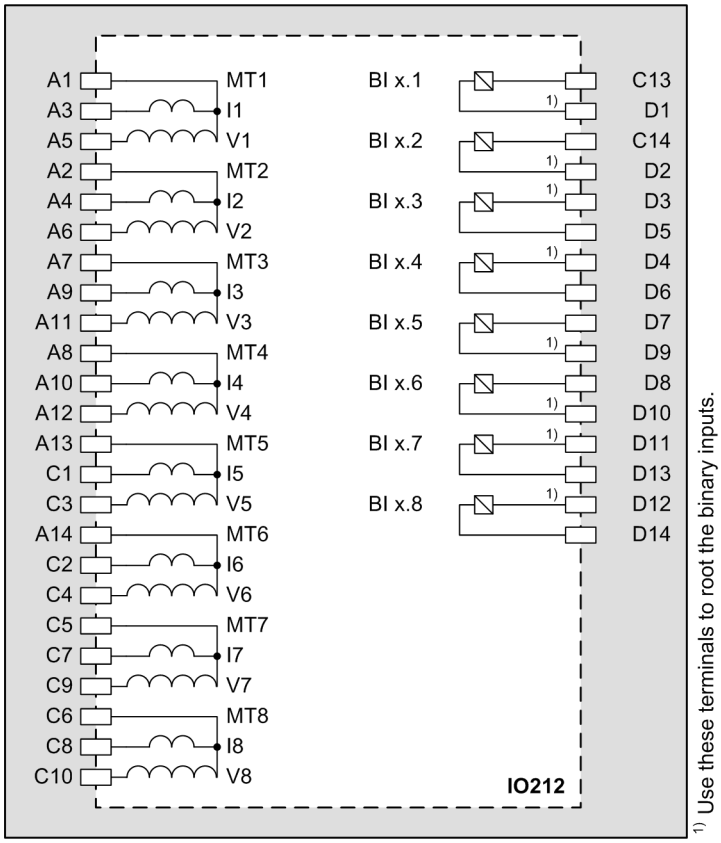

[tdio212x, 1, en_US]

Figure 3-48 IO212 – Connection Diagram

3.2.14 Input and Output Module IO214

3.2.14.1 Description

This input and output module is used as the base measurement module in all protection devices. One device can contain several IO214 input and output modules. The number of IO214 input and output modules depends on the measured values required. Up to 40 measuring channels are possible for each SIPROTEC device.

The terminals for the following are located on the input and output module IO214:

- 4 current transformers (optionally protection-class current transformers or instrument transformers)
- 4 voltage transformers
- 2 binary inputs
- 5 binary outputs with 4 high-speed make contacts (type F) and 1 high-speed change-over contact (type F)

The connections are distributed over:

- 1 x 8-pole current terminal
- 3 x 14-pole voltage terminal

3.2.14.2 Terminals

Overview of Terminals

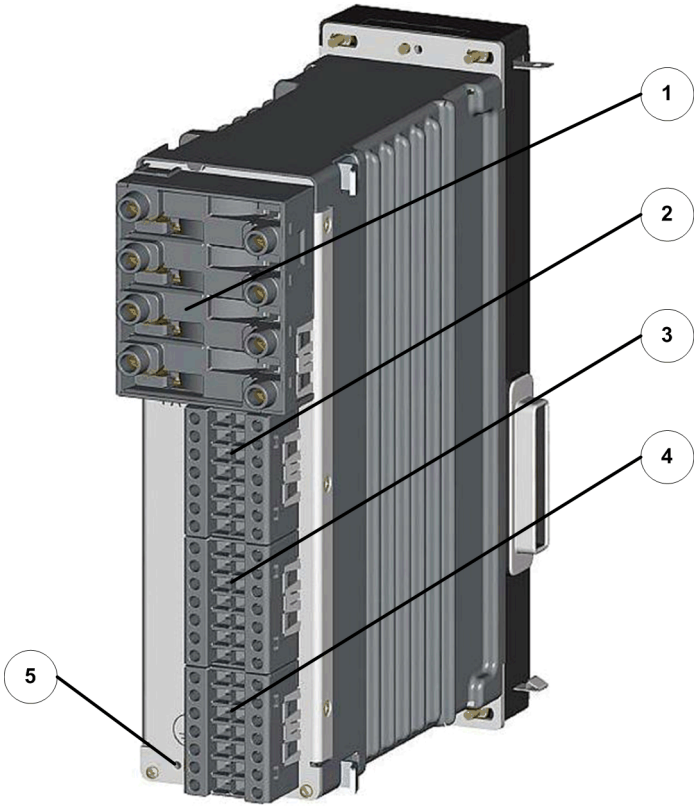

[dwio214p-030211-01.tif, 1, --_--]

Figure 3-49 IO214 – Terminals

(1) Current terminal xA
(2) Voltage terminal xB
(3) Voltage terminal xC
(4) Voltage terminal xD
(5) Grounding terminal

NOTE

x corresponds to the slot in the 19-inch rack.

Terminal and Connection Diagram

For the binary inputs and outputs, the x corresponds to the slot in the 19-inch rack.

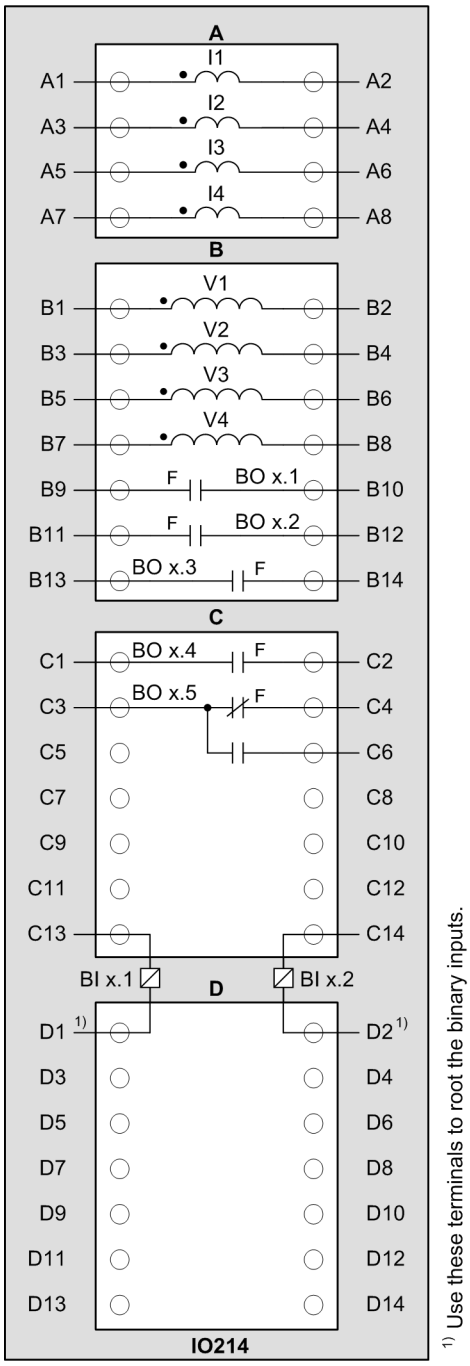

[cdio214x-260213-01.tif, 1, en_US]

Figure 3-50 IO214 – Terminal Diagram

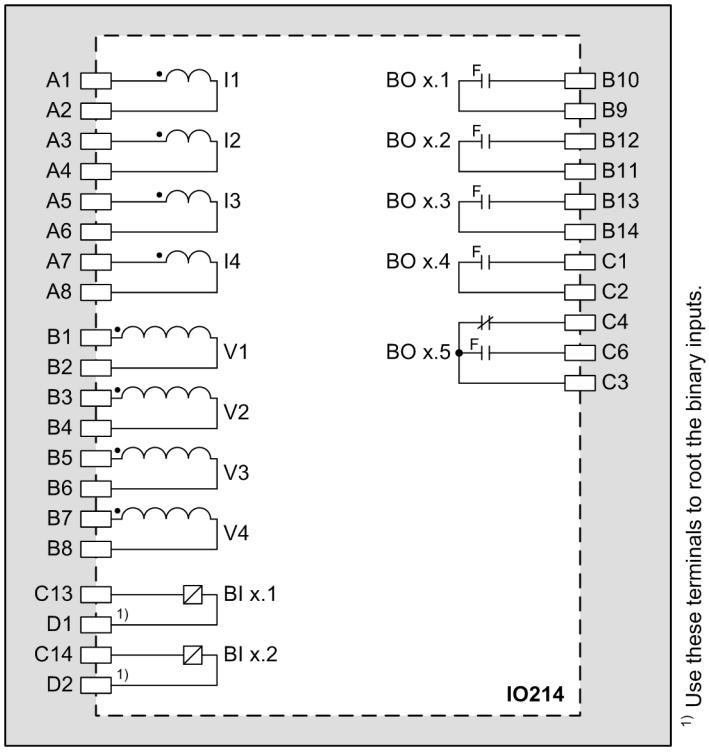

[tdio214x-270812-01.tif, 1, en_US]

Figure 3-51 IO214 – Connection Diagram

3.2.15 Input and Output Module IO215

3.2.15.1 Description

This input and output module is used as the base measurement module in all protection devices and bay units. One device can contain several IO215 input and output modules. The number of IO215 input and output modules depends on the measured values required. Up to 40 measuring channels are possible for each SIPROTEC device.

The terminals for the following are located on the input and output module IO215:

- 4 current transformers (optionally protection-class current transformers or instrument transformers)
- 4 voltage transformers for the connection of an isolation amplifier P27000-H1-S011
  Connect each phase of the device via this isolation amplifier with capacitive voltage transformers from the Trench Co. The voltage input is specially designed for a measuring range up to of 7.07 V.
- 8 binary inputs
- 6 binary outputs, of which:
  – 4 high-speed make contacts (type F)
  – 2 high-speed change-over contacts (type F)

The connections are distributed over:

- 1 x 8-pole current terminal
- 3 x 14-pole voltage terminal

3.2.15.2 Terminals

The terminal and connection diagram is identical to the input and output module IO202 in the expansion module.

You can find more information in chapter *3.2.3.2 Terminals*, *Figure 3-17* and *Figure 3-18*.

3.2.16 Input Module IO230

3.2.16.1 Description

The terminals for the following are located on the IO230 module:

- 48 binary inputs

The connections are distributed over six 10-pole connection terminals.

NOTE

Note that the IO230 input module has group switching for switching thresholds. The thresholds of the binary inputs can be switched only in groups of 4. 4th group x1 to x4 and 4th group x7 to x10 (x = A, C, D, E, G, H).

3.2.16.2 Terminals

Overview of Terminals

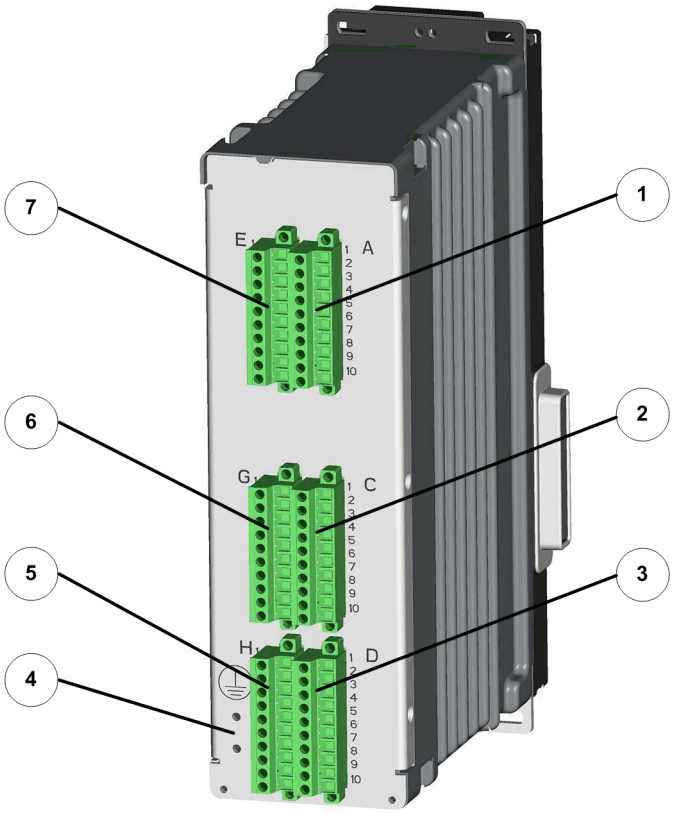

[dwio230x-030713-01.tif, 1, --_--]

Figure 3-52 IO230 – Terminals

(1) Connection terminal xA
(2) Connection terminal xC
(3) Connection terminal xD
(4) Grounding terminal
(5) Connection terminal xH
(6) Connection terminal xG
(7) Connection terminal xE

NOTE

x corresponds to the slot in the 19-inch rack.

Terminal and Connection Diagram

NOTE

The polarities of the voltages at the binary inputs must not be reversed!

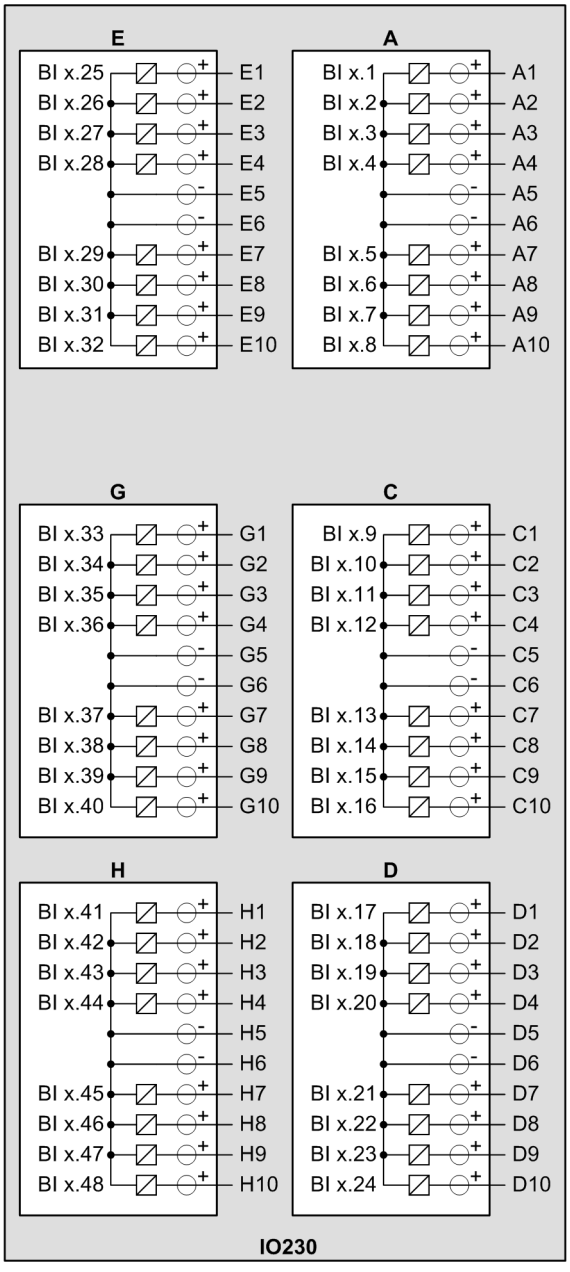

[cdio230x-030713-01.tif, 1, en_US]

Figure 3-53 IO230 – Terminal Diagram

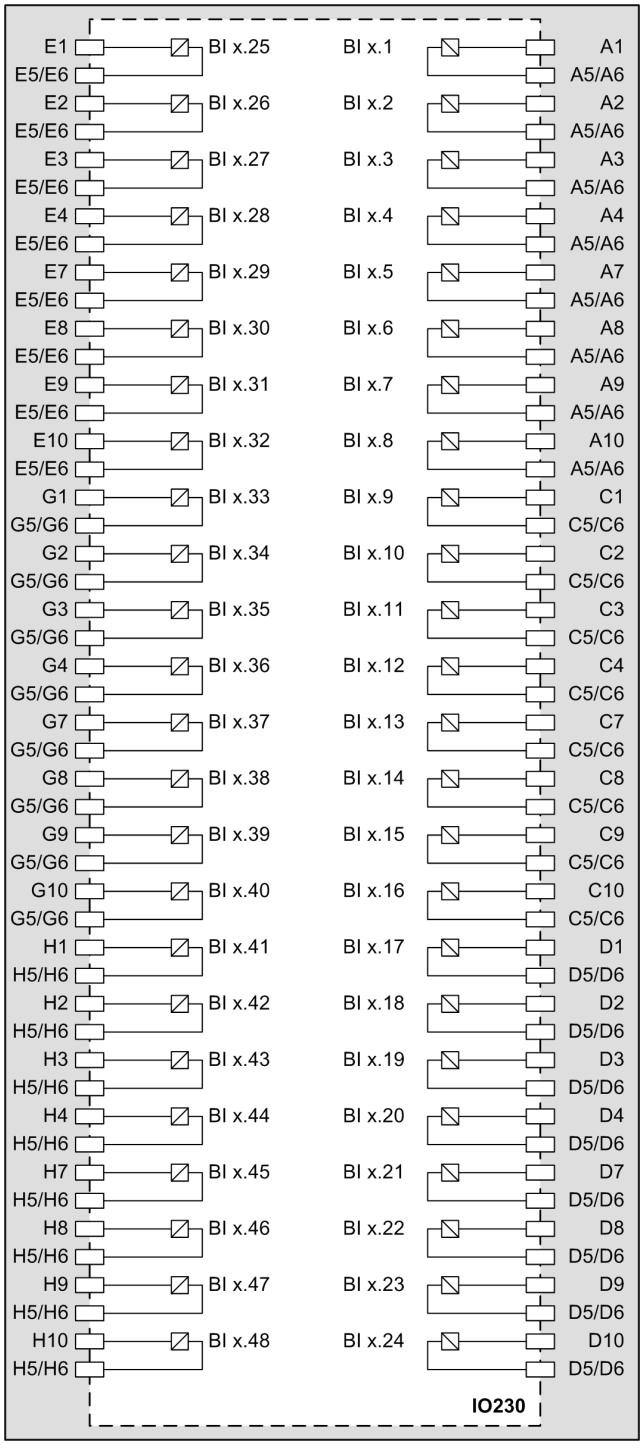

[dwtdio230x-211013, 1, en_US]

Figure 3-54 IO230 – Connection Diagram

3.2.17 Input and Output Module IO231

3.2.17.1 Description

The terminals for the following are located on the input and output module IO231:

- 24 binary inputs
- 24 binary outputs, standard make contacts (type S)

The connections are distributed over six 10-pole connection terminals.

3.2.17.2 Terminals

Overview of Terminals

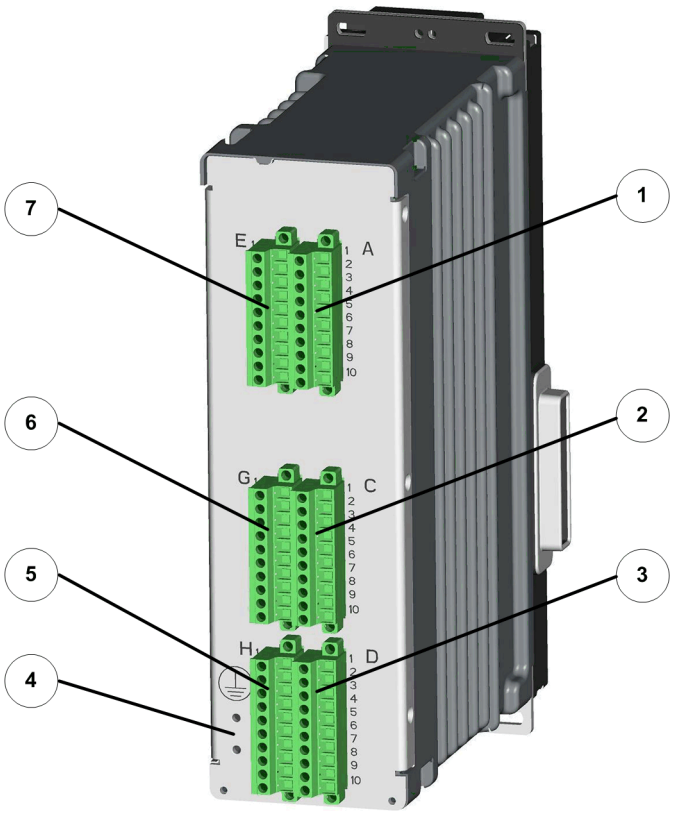

[dwio230x-030713-01.tif, 1, --_--]

Figure 3-55 IO231 – Terminals

(1) Connection terminal xA
(2) Connection terminal xC
(3) Connection terminal xD
(4) Grounding terminal
(5) Connection terminal xH
(6) Connection terminal xG
(7) Connection terminal xE

NOTE

x corresponds to the slot in the 19-inch rack.

Terminal and Connection Diagram

NOTE

The polarities of the voltages at the binary inputs must not be reversed!

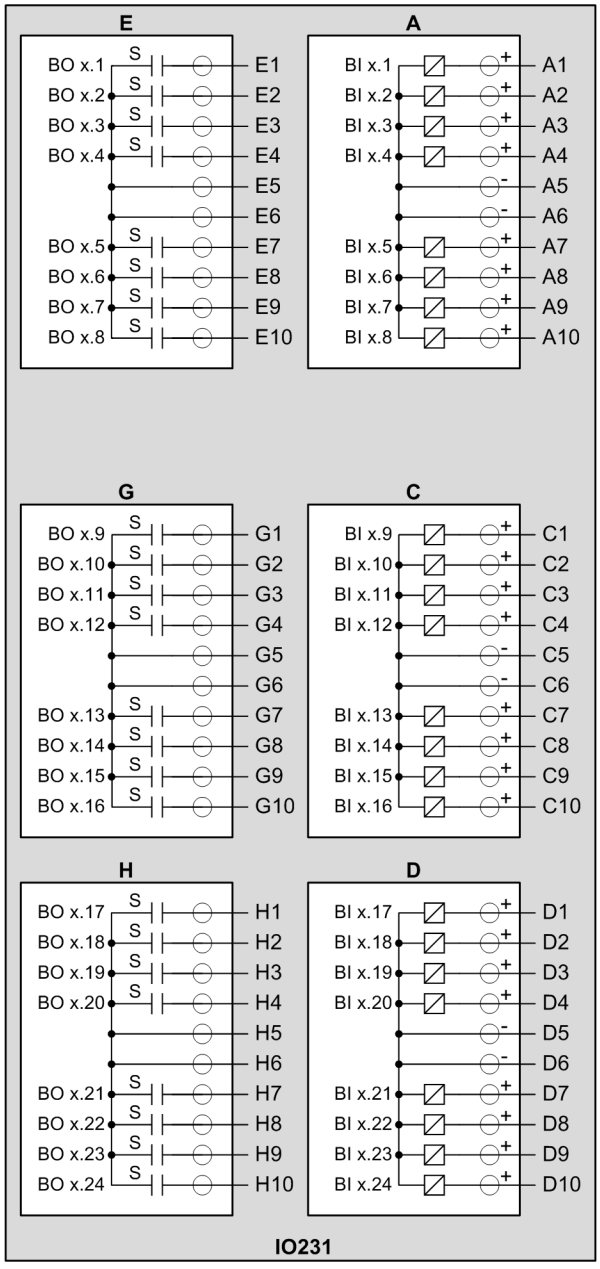

[cd_io231x, 2, en_US]

Figure 3-56 IO231 – Terminal Diagram

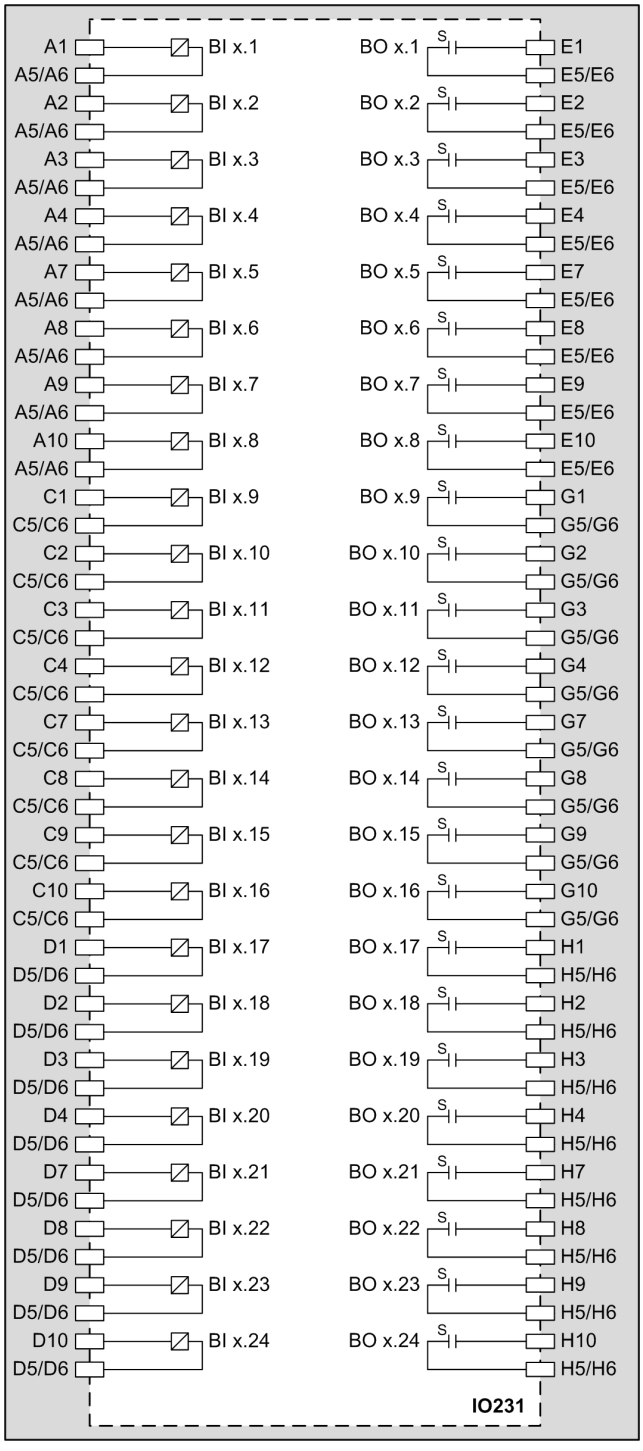

[td_tdio231x, 1, en_US]

Figure 3-57 IO231 – Connection Diagram

3.2.18 Input and Output Module PB201

3.2.18.1 Description

The process-bus assembly is used for the reception of Sampled Measured Values (SMV) according to IEC 61850-9-2 via 6 optical interfaces.

3.2.18.2 Terminals

Overview of Terminals

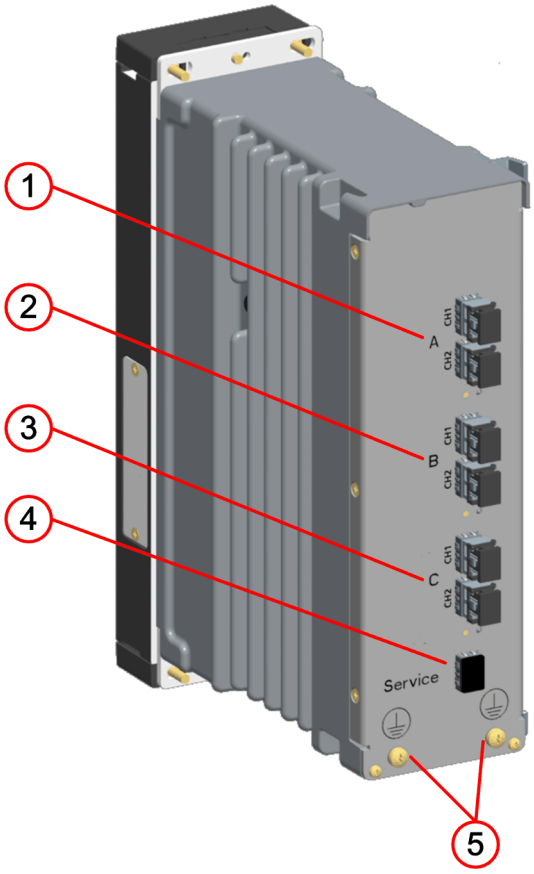

[dw_pb201, 1, --_--]

Figure 3-58 PB201 – Terminals

(1) 2 LC Duplex interfaces channel A
(2) 2 LC Duplex interfaces channel B
(3) 2 LC Duplex interfaces channel C
(4) 1 LC Duplex interface service port
(5) 2 grounding terminals

Product code	P1Txxxxxxxxxx
Connector type	7 x LC Duplex of which 1 is a service port
Wavelength	λ = 1300 nm
Baud rate	100 Mbits/s
Protocol	IEC 61850-9-2 (SMV) IEC 62439-3 (PRP and HSR)
Max. line length	2 km for 62.5 µm/125 µm optical fibers

Transmitter Power	**Minimum**	**Typical**	**Maximum**
50 µm/125 µm, NA[1] = 0.2	-23.5 dBm	-20.0 dBm	-14.0 dBm
62.5 µm/125 µm, NA[1] = 0.275	-20.0 dBm	-17.0 dBm	-14.0 dBm

Receiver sensitivity	Maximum -12.0 dBm Minimum -31.0 dBm

Optical budget	Minimum 7.5 dB for 50 µm/125 µm, NA[1] = 0.2 Minimum 11.0 dB for 62.5 µm/125 µm, NA[1] = 0.275
Laser class 1 as per EN 60825-1/-2	With the use of 62.5 µm/125 µm and 50 µm/125 µm optical fibers
Comment: [1] Numerical aperture (NA = sin θ (launch angle))	

3.3 Power-Supply Module of Non-Modular Devices (7xx82)

3.3.1 Power-Supply Module PS101

3.3.1.1 Description

The power-supply module PS101 is always permanently installed in the 1/3 module. The following can be found on the PS101 module:

- 2 positions for plug-in modules (communication modules, measuring-transducer modules)
- Terminals for time synchronization and an integrated Ethernet interface
- A 14-pole voltage terminal (3 binary inputs, 3 binary outputs and connection for power supply)
- Battery for the CPU

The following 3 variants are available for the rated voltage range:

- DC 24 V to 48 V
- DC 60 V to 125 V
- DC 110 V to DC 250 V and AC 100 V to AC 230 V (50 Hz and 60 Hz)

3.3.1.2 Terminals

Overview of Terminals

The terminals assigned to the module are identified by the frame in the figure.

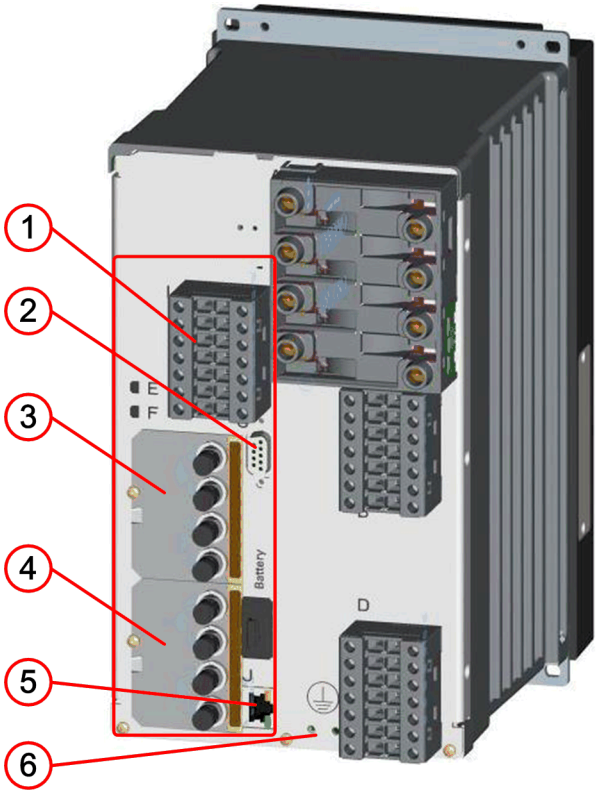

[dwps101x-210513-01.tif, 1, --_--]

Figure 3-59 PS101 – Terminals

(1) Voltage terminal L
(2) Time synchronization G

(3) Plug-in module position E
(4) Plug-in module position F
(5) Integrated Ethernet interface J
(6) Grounding terminal

Terminal and Connection Diagram

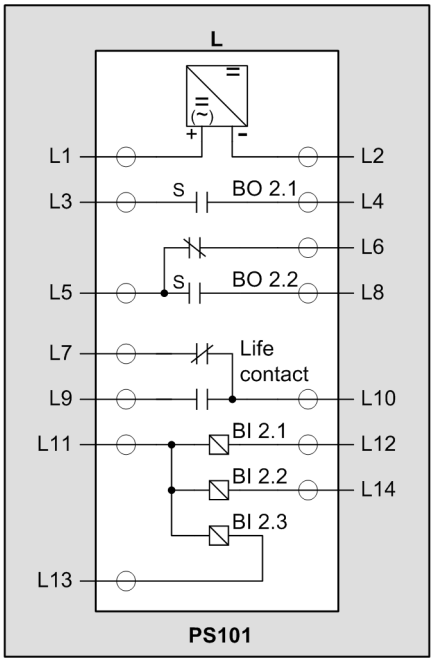

[cdps101x-210513-01.tif, 1, en_US]

Figure 3-60 PS101 – Terminal Diagram

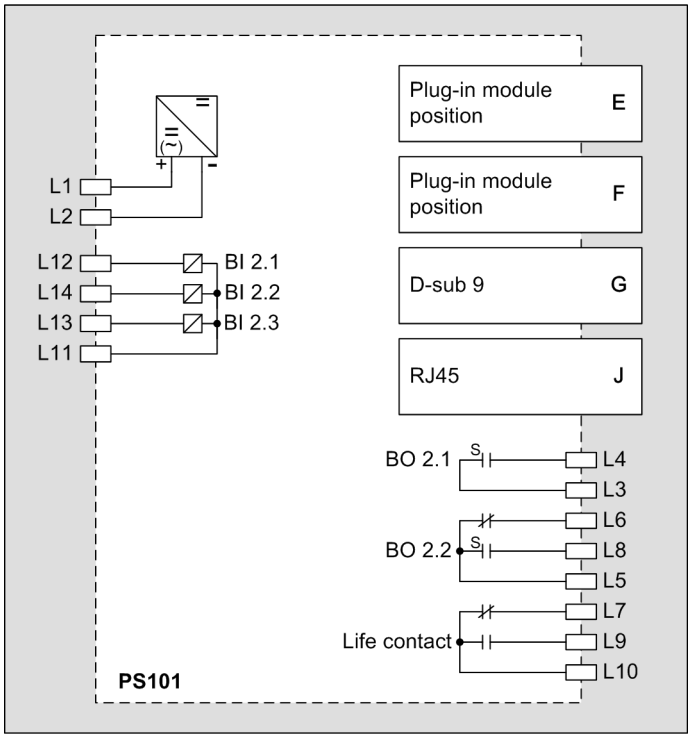

[tdps101x-210513-01.tif, 1, en_US]

Figure 3-61 PS101 – Connection Diagram

Time-Synchronization Terminal

The terminal for time synchronization is located on the D-sub 9 interface (position G). Time synchronization signals for DC 5 V, DC 12 V, and DC 24 V can be processed as an option.

For further information on connecting to time synchronization, see chapter *6.6 Communication Interfaces* in the Technical Data.

Integrated Ethernet Interface J (RJ45)

This terminal is used to load the device with DIGSI 5 using Ethernet. This terminal also enables straighforward IEC 61850 Ethernet communication (including GOOSE) or communication with another protocol via Ethernet, for example, for connecting an external RTD unit.

For further information on the integrated Ethernet interface, see chapter *6.6 Communication Interfaces* in the Technical Data.

3.4 Input and Output Modules of the Non-Modular Devices (7xx82)

3.4.1 Application Sheet of the Input and Output Modules of the Non-Modular Devices

Module Designation	Function Description
IO101	• Input and output module • 4 current measuring inputs, 8 binary inputs, 6 binary outputs
IO102	• Input and output module • 4 current measuring inputs, 4 voltage measuring inputs, 8 binary inputs, 6 binary outputs
IO103	• Input and output module • 8 current measuring inputs, 4 binary inputs, 4 binary outputs
IO110	• Input and output module • 12 binary inputs, 7 binary outputs

3.4.2 Input and Output Module IO101

3.4.2.1 Description

The terminals for the following are located on the input and output module IO101:

- 4 current transformers (3 transformers always as protection-class current transformers, the 4th optionally as protection-class or instrument transformer)
- 8 binary inputs
- 6 binary outputs, of which:
  - 4 standard make contacts (type S)
  - 2 standard change-over contacts (type S)

The connections are distributed over:

- 1 x 8-pole current terminal
- 2 x 14-pole voltage terminal

3.4.2.2 Terminals

Overview of Terminals

The terminals assigned to the module are identified by the frame in the figure.

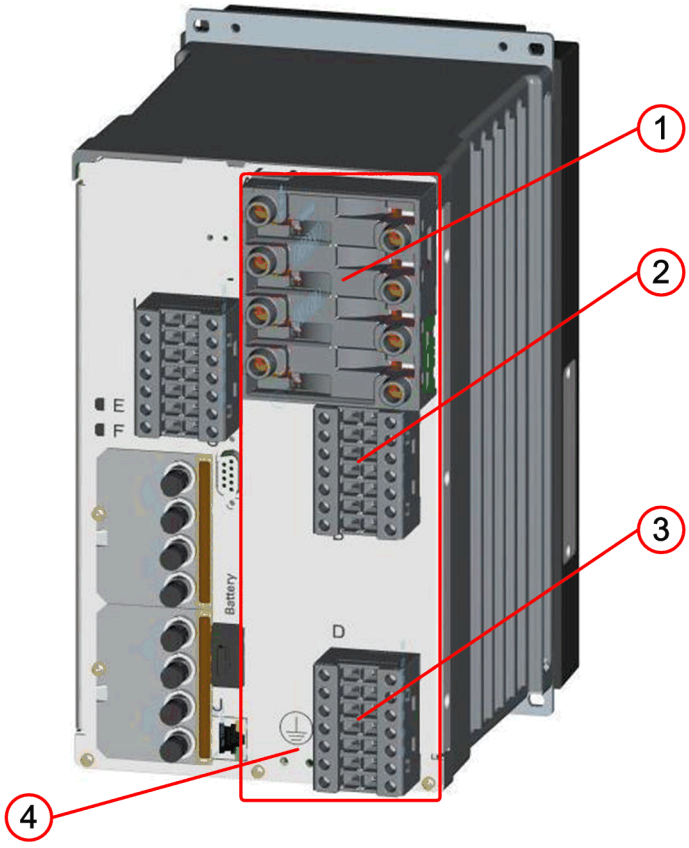

[dwio101x-220513-01.tif, 1, --_--]

Figure 3-62 IO101 – Terminals

(1) Current terminal A
(2) Voltage terminal B
(3) Voltage terminal D
(4) Grounding terminal

Terminal and Connection Diagram

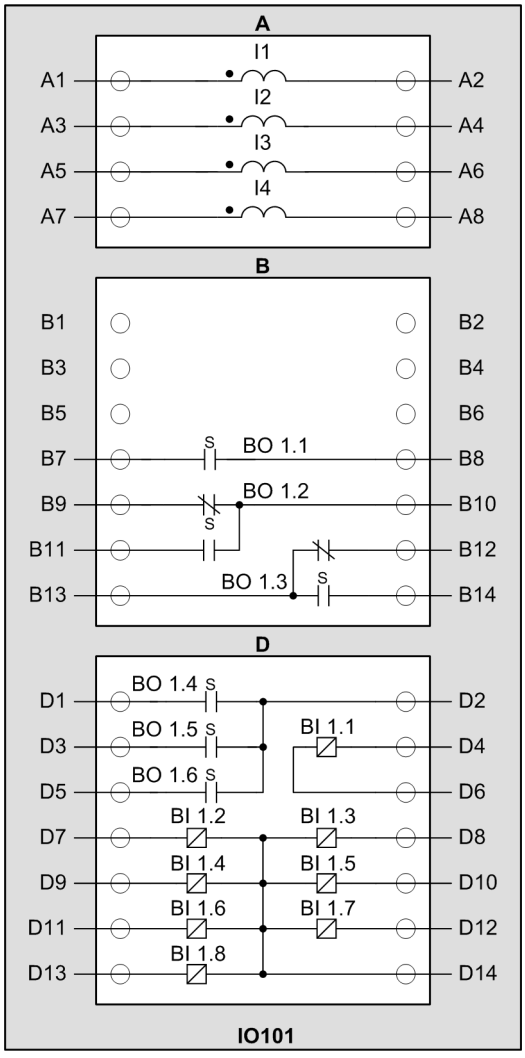

[cdio101x-220513-01.tif, 1, en_US]

Figure 3-63 IO101 – Terminal Diagram

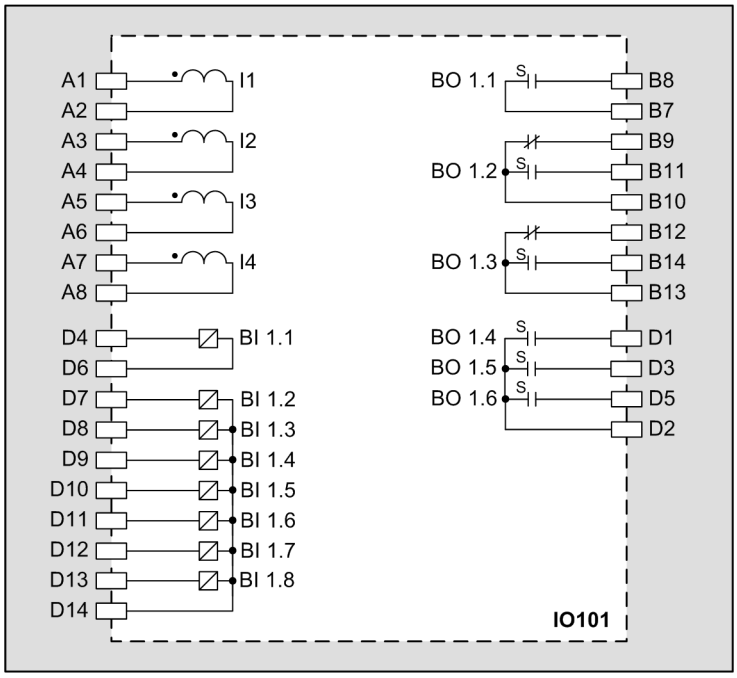

[tdio101x-220513-01.tif, 1, en_US]

Figure 3-64 IO101 – Connection Diagram

3.4.3 Input and Output Module IO102

3.4.3.1 Description

The terminals for the following are located on the input and output module IO102:

- 4 current transformers (3 transformers always as protection-class current transformers, the 4th optionally as protection-class or instrument transformer)
- 4 voltage transformers
- 8 binary inputs
- 6 binary outputs, of which:
  - 4 standard make contacts (type S)
  - 2 standard change-over contacts (type S)

The connections are distributed over:

- 1 x 8-pole current terminal
- 2 x 14-pole voltage terminal

3.4.3.2 Terminals

Overview of Terminals

The terminals assigned to the module are identified by the frame in the figure.

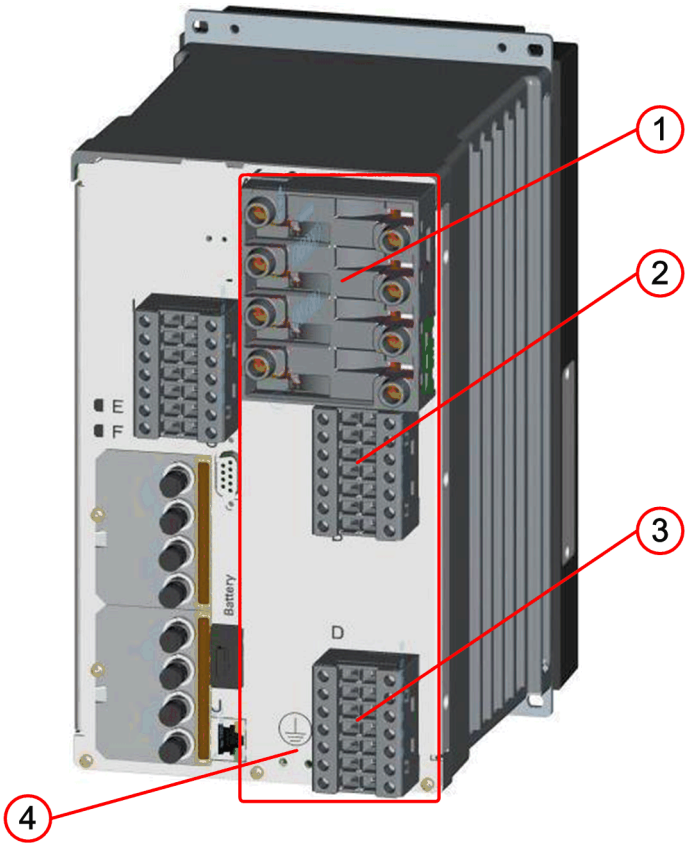

[dwio102x-220513-01.tif, 1, --_--]

Figure 3-65 IO102 – Terminals

(1) Current terminal A
(2) Voltage terminal B
(3) Voltage terminal D
(4) Grounding terminal

Terminal and Connection Diagram

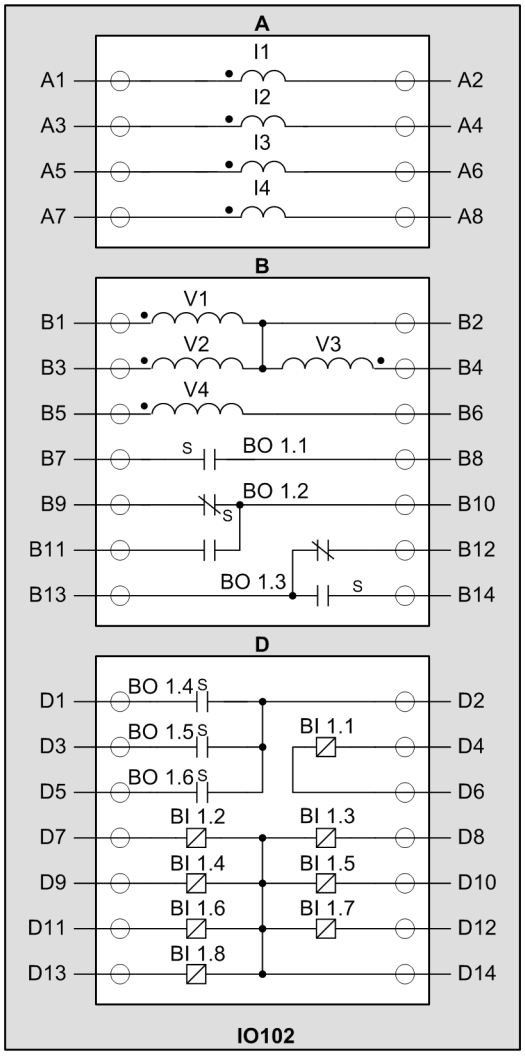

[cdio102x-220513-01.tif, 1, en_US]

Figure 3-66 IO102 – Terminal Diagram

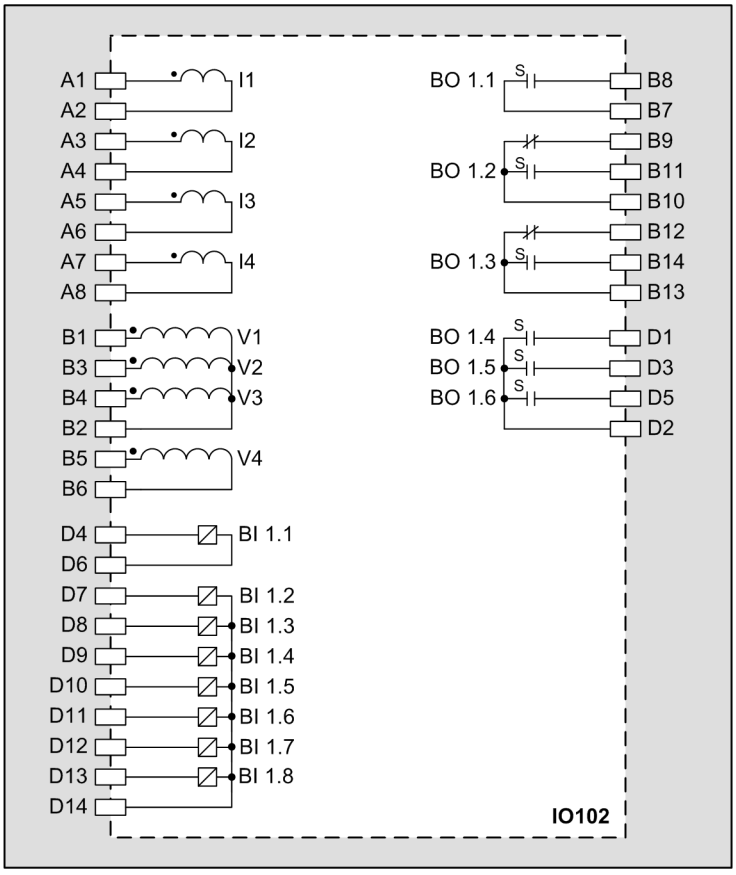

[tdio102x-220513-01.tif, 1, en_US]

Figure 3-67 IO102 – Connection Diagram

3.4.4 Input and Output Module IO103

3.4.4.1 Description

The terminals for the following are located on the input and output module IO103:

- 8 current transformers (optionally as protection-class current transformers or instrument transformers)
- 4 binary inputs (2 binary inputs each with common connection)
- 4 binary outputs with 4 standard make contacts (type S)

The connections are distributed over:

- 2 x 8-pole current terminal
- 1 x 14-pole voltage terminal

3.4.4.2 Terminals

Overview of Terminals

The terminals assigned to the module are identified by the frame in the figure.

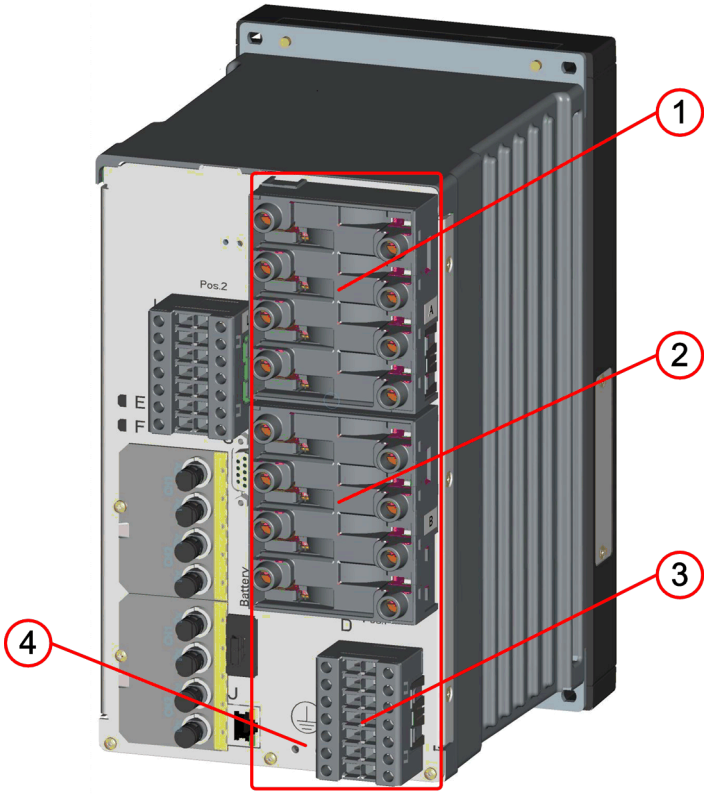

[dwio103x-121113-01, 1, en_US]

Figure 3-68 IO103 – Terminals

(1) Current terminal A
(2) Current terminal B
(3) Voltage terminal D
(4) Grounding terminal

Terminal and Connection Diagram

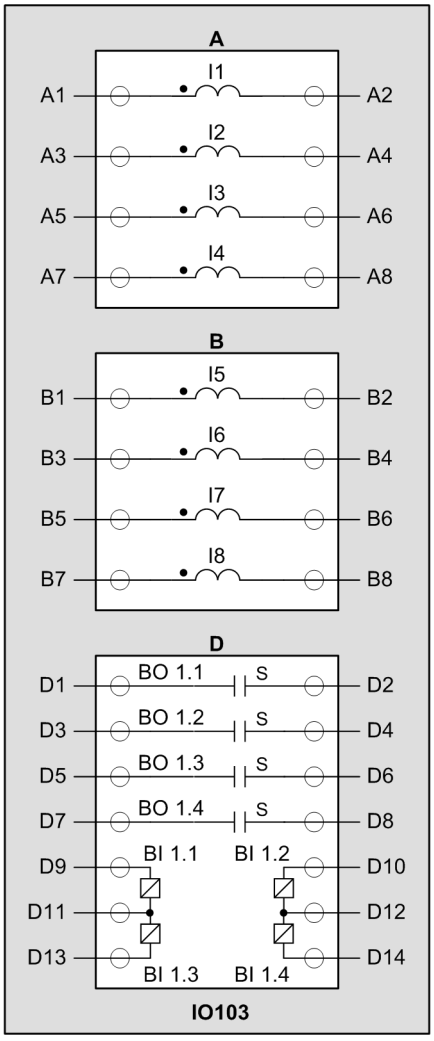

[cdio103x-131113-01, 3, en_US]

Figure 3-69 IO103 – Terminal Diagram

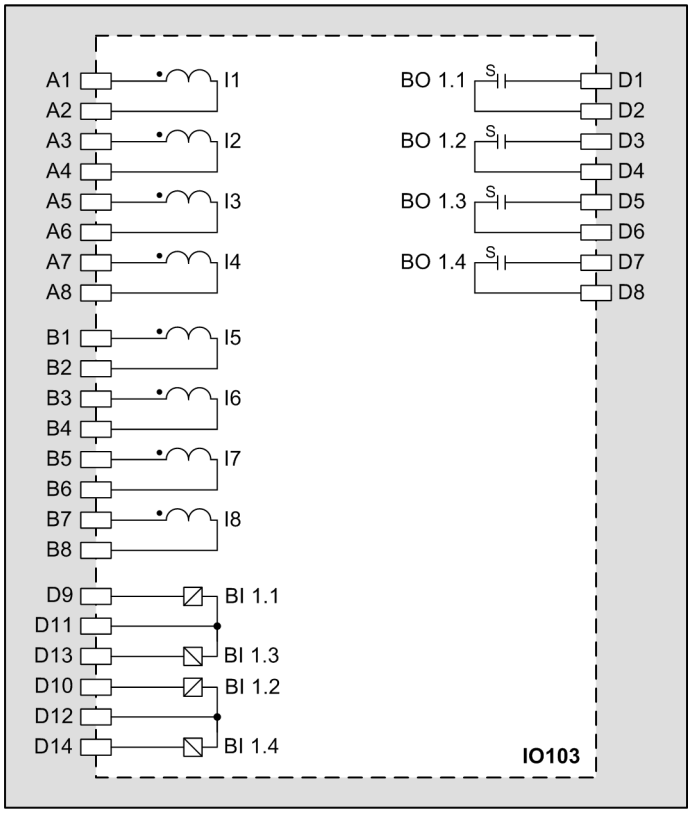

[tdio103x-01.vsd, 1, en_US]

Figure 3-70 IO103 – Connection Diagram

3.4.5 Input and Output Module IO110

3.4.5.1 Description

The terminals for the following are located on the input and output module IO110:

- 12 binary inputs
- 7 binary outputs, of which:
  – 7 standard make contacts (type S)

The connections are distributed over:

- 1 x 10-pole connection terminal
- 1 x 15-pole connection terminal

3.4.5.2 Terminals

Overview of Terminals

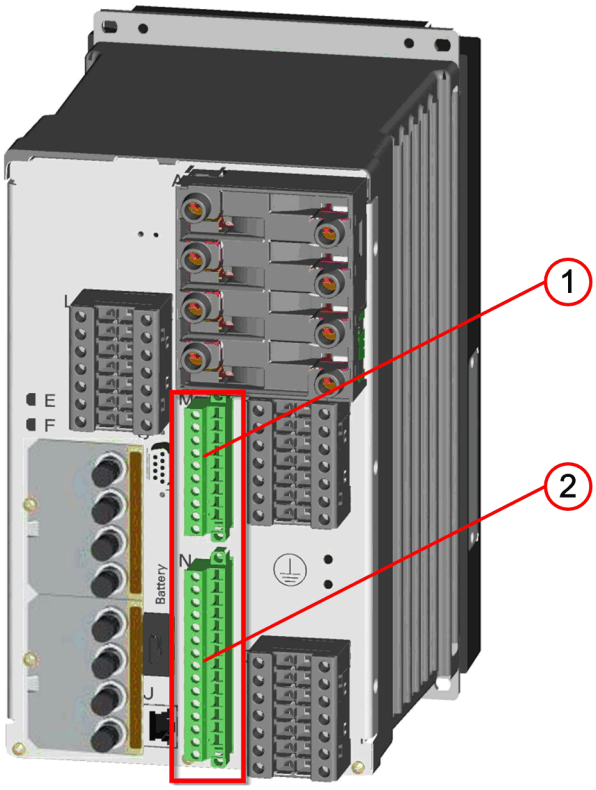

[dwio110x-220513-01.tif, 1, --_--]

Figure 3-71 IO110 – Terminals

(1) Connection terminal M

(2) Connection terminal N

Terminal and Connection Diagram

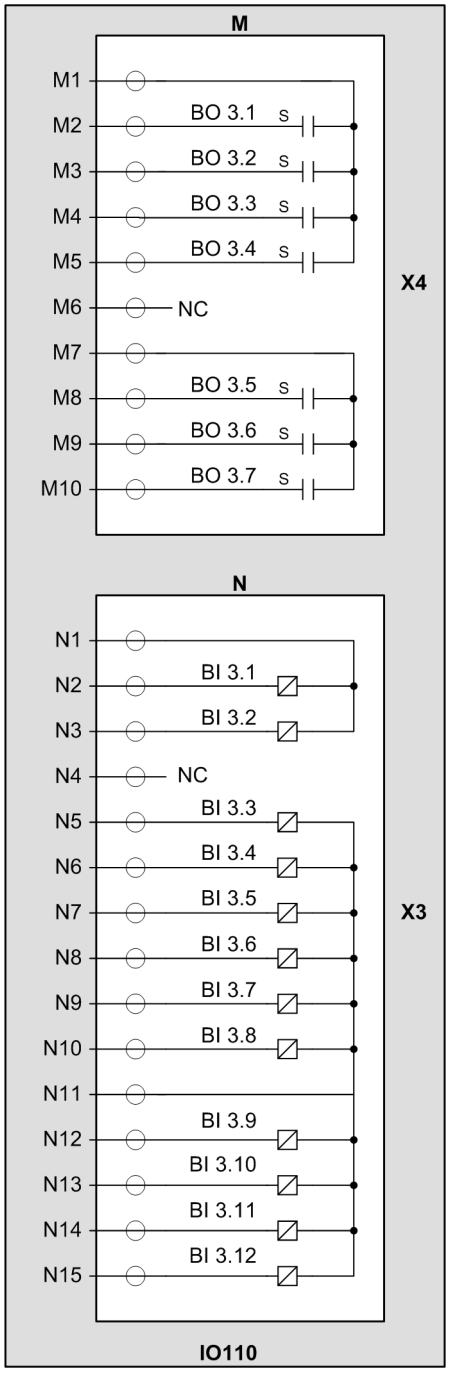

[cdio110x-220513-01.tif, 1, en_US]

Figure 3-72 IO110 – Terminal Diagram

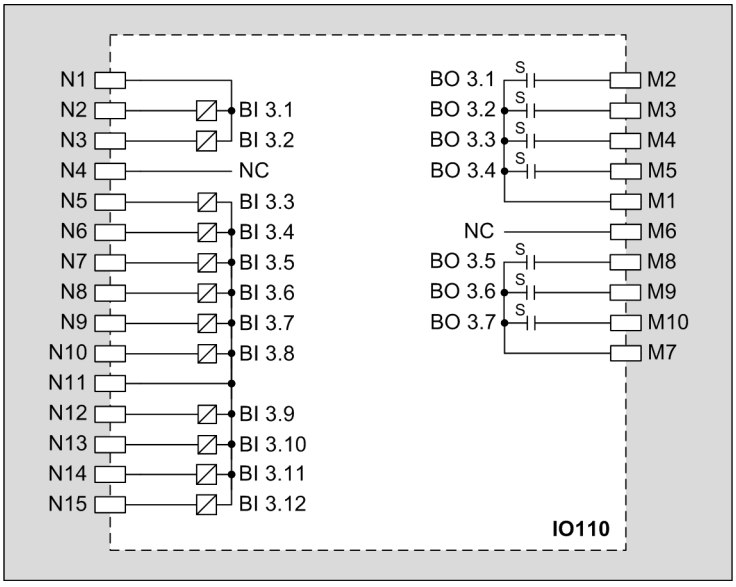

[tdio110x-220513-01.tif, 1, en_US]

Figure 3-73 IO110 – Connection Diagram

4 Plug-In Modules

4.1 Function Description of Plug-In Modules of Modular and Non-Modular Devices

Plug-In Module Designation	Function Description
USART-xx-yEL	Serial communication module with electric transmission
USART-xx-yFO	Serial communication module with optical transmission for short distance
USART-xx-yLDFO	Serial communication module with optical transmission for long distance
ETH-xx-2EL	Ethernet module with electric transmission
ETH-xx-2FO	Ethernet module with optical transmission
ANAI-CA-4EL	Measuring-transducer module
ARC-CD-3FO	Module for connecting optical sensors for detecting arcs
xx **y**	**2 letters, unique code for the module in the product code of the device** **1 = 1 channel** **2 = 2 channels**

4.2 Communication Modules

4.2.1 Overview

SIPROTEC devices can be ordered with factory-installed communication modules. The communication modules can also be installed and replaced in the SIPROTEC devices afterwards. You do not have to open the device for this.

NOTE

The communication modules available for reordering are not preconfigured. Use DIGSI 5 to carry out the functional adjustment to the required protocol application.

The communication modules can be installed in the base module or the 1/3 module and in the expansion module with the plug-in module assembly CB202. A maximum of 2 communication modules each can be installed. You can use only one CB202 in the device.

The plug-in module assembly CB202 is a module with an integrated power supply.

The plug-in module assembly CB202 communicates with the base module via a special connecting cable. This connecting cable (CAT 5 FTP patch cable) is always included in the scope of delivery of the CB202 assembly or the devices containing the CB202 assembly and need not be ordered separately.

Ensure that you route the communication lines separately from network circuits.

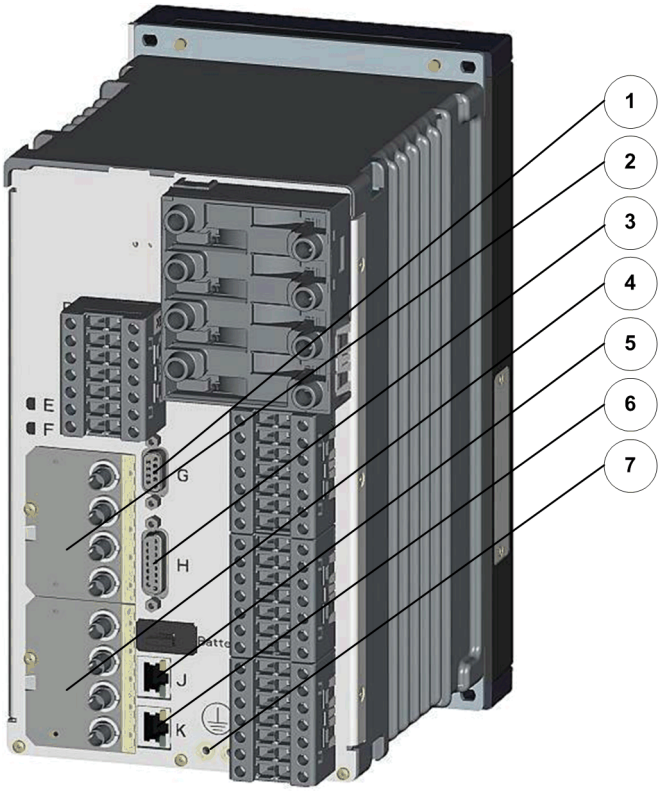

[dwcm201p-030211-01.tif, 1, --_--]

Figure 4-1 Plug-In Module Positions and Communication Terminals in the Base Module, with Modular Devices

(1) Time synchronization G
(2) Plug-in module position E
(3) Detached on-site operation panel H
(4) Plug-in module position F

(5) Integrated Ethernet interface J
(6) Connection to the expansion module with CB202 module
(7) Grounding terminal

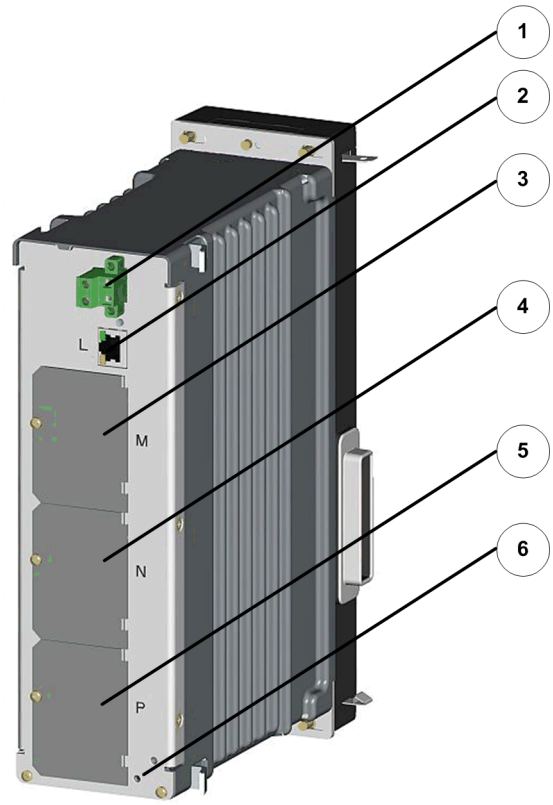

[dwlmnppo-030211-01.tif, 1, --_--]

Figure 4-2 Plug-In Module Positions and Communication Terminals in the Expansion Module with CB202

(1) 2-pole terminal to connect power supply
(2) COM link L (connection to interface K of the base unit)
(3) Plug-in module position M
(4) Plug-in module position N
(5) Plug-in module position P
(6) Grounding terminal

NOTE

You cannot insert any communication module at plug-in module position M. The plug-in module position M is intended for a measuring-transducer module only.

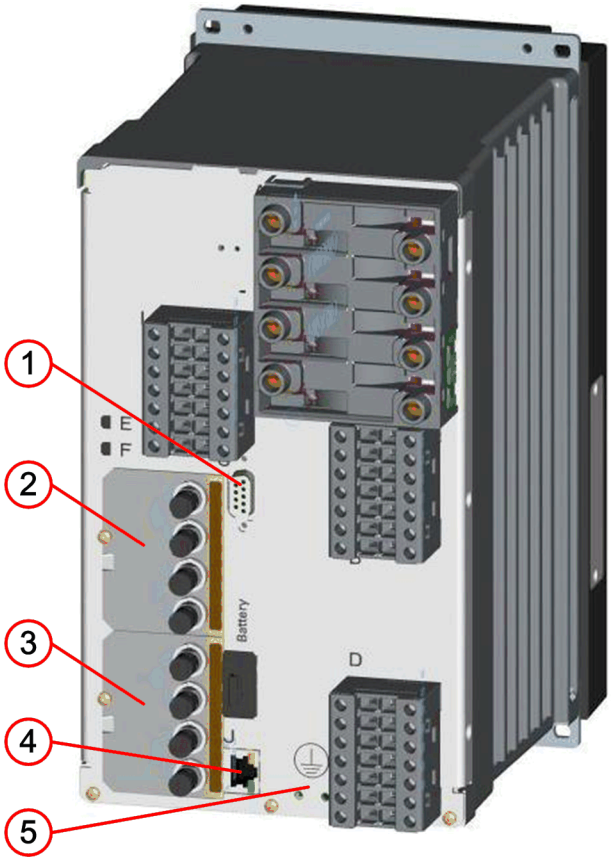

[dwcm102p-250613-01.tif, 1, --_--]

Figure 4-3 Plug-In Module Positions and Communication Terminals on the 1/3 Module, for Non-Modular Devices (7xx82)

(1) Time synchronization G
(2) Plug-in module position E
(3) Plug-in module position F
(4) Integrated Ethernet interface J
(5) Grounding terminal

The following communication modules can be used for SIPROTEC 5:

- Serial modules

  Application: Communication to the substation automation technology via substation-control protocols

  Protection interface (only optical serial modules) for interfacing to external communication converters for short direct connections.

  2 different communication protocols or 2 different applications can be operated on serial modules with 2 connections. The IEC 60870-5-103 protocol for the substation automation technology as well as a protection interface, for example, can be operated on a serial optical module for close range with 2 connections.

  Assign the protocol application to the corresponding channel of the communication module with DIGSI 5.

- Ethernet Modules

  Application: Ethernet-based communication to the substation automation technology via substation-control protocols (for example, IEC 61850 and DNP3)

  – Secure communication to DIGSI 5

  – Communication between the devices (IEC 61850-GOOSE)

  – Synchrophasor protocol

  The modules can be operated with or without an integrated switch.

- Long-distance modules

  Application: Direct protection interface communication over long distances using multimode or single-mode optical fibers.

The designation of the modules corresponds to the following scheme, which is typically explained with the module USART-AB-1EL. The module designation consists of 3 blocks.

1st block	Type of module USART = Serial module for short or long distance ETH = Ethernet module
2nd block	Unique code for the module in the product code of the device The code consists of 2 letters.
3rd block	Number and physical design of the connections 1 = 1 connection (1 channel) 2 = 2 connections (2 channels) EL = Electrical connection FO = Fiber-optic connection LDFO = Long-distance transmission via fiber-optic cables

4.2.2 Communication Applications of the Plug-In Modules

You can find information on communication applications for the plug-in modules in the following tables.

Table 4-1 Communication Applications of the Plug-In Modules

Plug-In Module	Module Type: USART-AB-1EL	Module Type: USART-AC-2EL	Module Type: Plug-In Module USART-AD-1FO	Module Type: USART-AE-2FO	Module Type: ETH-BA-2EL	Module Type: ETH-BB-2FO
Physical Connection						
1 x electrical serial RS485, RJ45	●					
2 x electrical serial RS485, RJ45		●				

Plug-In Module	Module Type: USART-AB-1EL	Module Type: USART-AC-2EL	Module Type: Plug-In Module USART-AD-1FO	Module Type: USART-AE-2FO	Module Type: ETH-BA-2EL	Module Type: ETH-BB-2FO
1 x optical serial, 820 nm, ST connector, 1.5 km over 62.5/125 µm multimode optical fiber			●			
2 x optical serial, 820 nm, ST connector, 1.5 km over 62.5/125 µm multimode optical fiber				●		
2 x electrical Ethernet 10/100 Mbit/s, RJ45, 20 m					●	
2 x optical Ethernet 100 Mbit/s, 1300 nm, LC duplex plug, 2 km over 50/125 µm or 62.5/125 µm multimode optical fiber						●
Applications						
IEC 61850-8-1 server (incl./without GOOSE, reporting to 6 clients) You can find more detailed information in the Communication Protocols Manual in chapter IEC 61850 .	–	–	–	–	X	X
DNP3 serial	X	X	X	X	–	–
DNP3 over Ethernet	–	–	–	–	X	X
IEC 60870-5-104	–	–	–	–	X	X
Modbus TCP	–	–	–	–	X	X
IEC 60870-5-103 (extended)	X	X	X	X	–	–
PROFINET IO	–	–	–	–	X	X
SUP serial	X	X	X	X	–	–
SUP Ethernet	–	–	–	–	X	X
DIGSI 5 Protocol	–	–	–	–	X	X
IRIG-B, DCF77, highly accurate 1-s pulse	–	–	–	–	–	–
Synchrophasor (IEEE C37.118 – IP)	–	–	–	–	X	X
Protection interface (Sync. HDLC, IEEE C37.94)	–	–	X	X	–	–
Additional Ethernet Protocols and Services						
SNTP (time synchronization via Ethernet)	–	–	–	–	X	X
IEEE 1588 (time synchronization)	–	–	–	–	X	X
DHCP (automatic IP configuration), DCP	–	–	–	–	X	X
RSTP (Ethernet ring redundancy)	–	–	–	–	X	X
PRP (redundancy protocol)	–	–	–	–	X	X
HSR (redundancy protocol)	–	–	–	–	X	X
SNMP V3 (network management protocol)	–	–	–	–	X	X

NOTE

The **USART** and **ETH** plug-in module types may be used in slots **E** and **F** in the base module as well as in slots **N** and **P** in the CB202 expansion module. They are not intended for use in slot **M** in the **CB202** expansion module.

4.2.3 Serial Modules for Short Distances

4.2.3.1 Special Features of Serial Electrical Modules

The serial electrical modules are equipped with RJ45 connections. These are not Ethernet connections. The serial signals of the RS485 interface are routed to the RJ45 connections (see following figure).

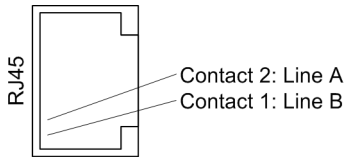

[dwrj45pb-030211-01.tif, 1, en_US]

Figure 4-4 RJ45 Terminals for the Serial Signals of the RS485 Interface

Cabling Examples of Devices with Serial Electrical Modules

Serial electrical RS485 connections of devices in the SIPROTEC 5 series can be cabled with low-cost Ethernet patch cables. Special bus cables and adaptors are not needed. Pay attention to the following note if you include devices from the SIPROTEC 4 series in the connection.

NOTE

The RS485 interface in devices of the SIPROTEC 4 series is a D-Sub 9 connection with a connected terminal resistor.

If you connect devices from the SIPROTEC 5 series with devices from the SIPROTEC 4 series, then use a Y adaptor with the order designation 7XV5103-2BA00. Complete the connection on the last device with a terminal resistor. For the SIPROTEC 5 device, use a terminal resistor with the order designation RS485-Terminator 7XV5103-5BA00.

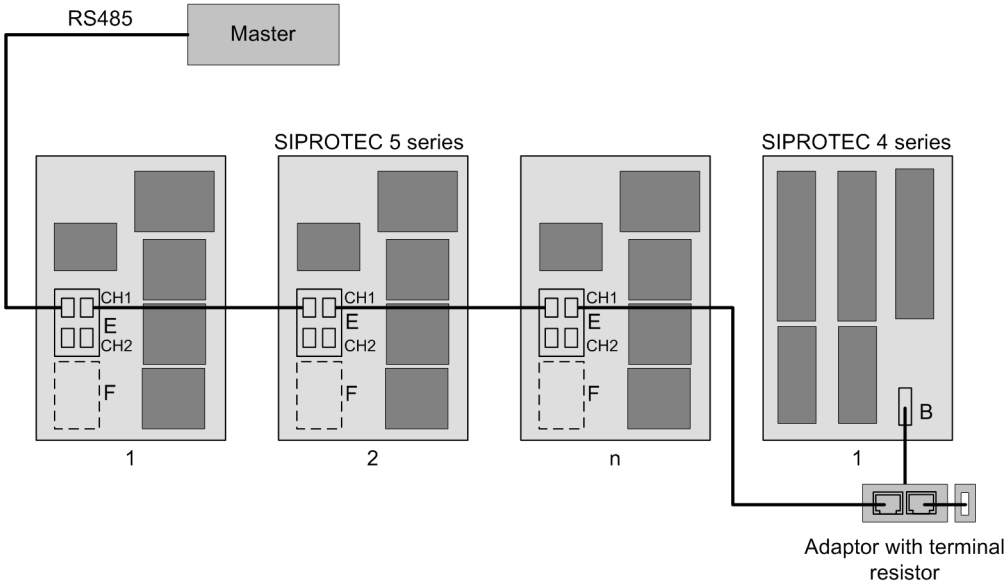

[dwserma1-030211-04.tif, 1, en_US]

Figure 4-5 Communication with a Single Master Using an RS485 Bus

The preceding figure shows the cabling using the new RJ45 sockets in a simplified format. The serial RS485 bus can be extended by simply connecting Ethernet patch cables from device to device.

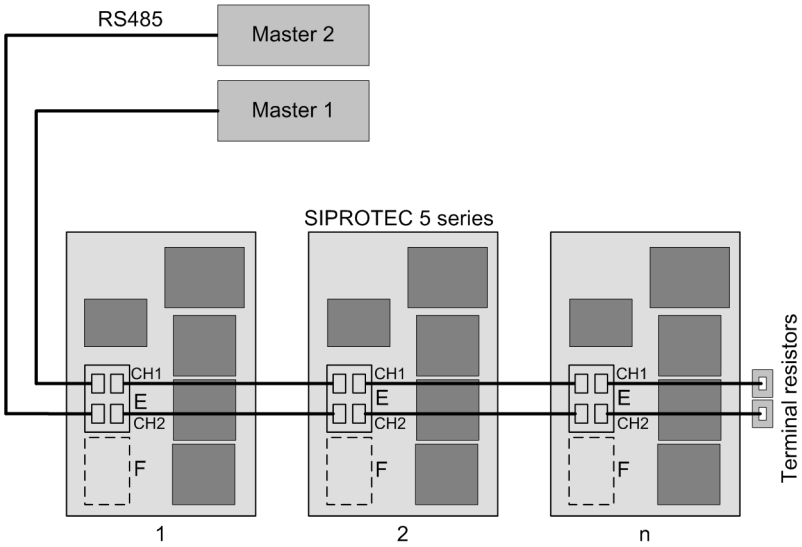

[dwserma2-030211-05.tif, 1, en_US]

Figure 4-6 Redundant Communication with 2 Masters Using RS485 Bus (for Example, Redundant IEC 60870-5-103 Protocol)

The preceding figure shows the use of both connections on one module for connecting the devices to 2 independent masters following the same principle as with a single master.

Reorders

When reordering serial communication modules, specify the product code for the physical version of the module. The order configurator (IPC configurator) shows you which applications are capable of running on the module:

- Serial
- 1-channel or 2-channel
- Electrical or optical

4.2.3.2 USART-AB-1EL

Description	Serial asynchronous communication module with one electrical interface
Product code	P1Zxxxxxxxxxx
Figure	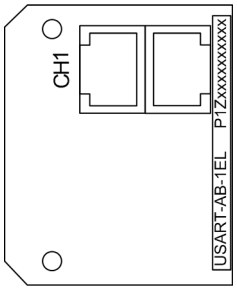
Connector type	2 x RJ45
Baud rate	1.2 kbits/s to 115.2 kbits/s
Protocol	IEC 60870-5-103 DNP3 SUP serial

4.2.3.3 USART-AC-2EL

Description	Serial asynchronous communication module with 2 independent electrical interfaces
Product code	P1Zxxxxxxxxxx
Figure	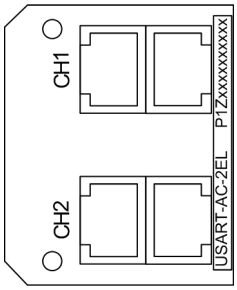
Connector type	4 x RJ45
Baud rate	1.2 kbits/s to 115.2 kbits/s
For 1 or 2 protocols or applications (1 application per connection)	IEC 60870-5-103 DNP3 SUP serial

4.2.3.4 USART-AD-1FO

Description	Serial asynchronous or synchronous communication module with 1 independent optical interface
Product code	P1Zxxxxxxxxxx
Figure	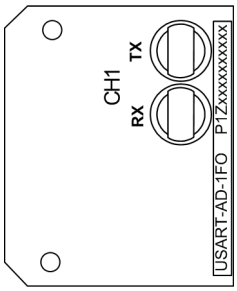
Connector type	2 x ST
Wavelength	λ = 820 nm
Baud rate	Asynchronous: 1.2 kbit/s to 115.2 kbit/s Synchronous: 64 kbit/s to 2 Mbit/s
For 1 protocol or application	IEC 60870-5-103 DNP3 SUP serial Protection-interface communication
Max. distance	2 km when using an optical fiber 62.5 µm/125 µm

Transmitter Power	**Minimum**	**Typical**	**Maximum**
50 µm/125 µm, NA[1] = 0.2	-19.8 dBm	-15.8 dBm	-12.8 dBm
62.5 µm/125 µm, NA[1] = 0.275	-16.0 dBm	-12.0 dBm	-9.0 dBm

Receiver sensitivity	Maximum +1 dBm Minimum -32 dBm
Optical budget	Minimum 4.2 dB for 50 µm/125 µm, NA[1] = 0.2 Minimum 8.0 dB for 62.5 µm/125 µm, NA[1] = 0.275

Laser class 1 as per EN 60825-1/-2	With the use of 62.5 µm/125 µm and 50 µm/125 µm optical fibers
Comment: [1] Numerical aperture (NA = sin θ (launch angle))	

4.2.3.5 USART-AE-2FO

Description	Serial asynchronous or synchronous communication module with 2 independent optical interfaces
Product code	P1Zxxxxxxxxxx
Figure	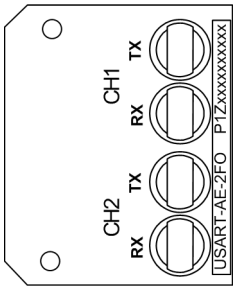
Connector type	4 x ST
Wavelength	λ = 820 nm
Baud rate	Asynchronous: both connections 1.2 kbit/s to 115.2 kbit/s Synchronous: both connections 64 kbit/s to 2 Mbit/s Asynchronous/Synchronous: 1 connection 1.2 kbit/s to 115.2 kbit/s and 1 connection 64 kbit/s to 2 Mbit/s
For 1 or 2 protocols or applications (1 application per optical connection)	IEC 60870-5-103 (asynchronous) DNP3 (asynchronous) SUP serial Protection-interface communication (synchronous)
Max. distance	2 km when using an optical fiber 62.5 µm/125 µm

Transmitter Power	Minimum	Typical	Maximum
50 µm/125 µm, NA[1] = 0.2	-19.8 dBm	-15.8 dBm	-12.8 dBm
62.5 µm/125 µm, NA[1] = 0.275	-16.0 dBm	-12.0 dBm	-9.0 dBm

Receiver sensitivity	Maximum +1 dBm Minimum -32 dBm
Optical budget	Minimum 4.2 dB for 50 µm/125 µm, NA[1] = 0.2 Minimum 8.0 dB for 62.5 µm/125 µm, NA[1] = 0.275
Laser class 1 as per EN 60825-1/-2	With the use of 62.5 µm/125 µm and 50 µm/125 µm optical fibers
Comment: [1] Numerical aperture (NA = sin θ (launch angle))	

4.2.4 Serial Modules for Long Distances

4.2.4.1 Application

The optical protection-interface modules are used for long distances over multimode or singlemode optical fibers. In the case of the protection interface, they serve the purpose of point-to-point transmission between 2 devices. One possible application is the transmission of differential protection data. For example, if you wish to transmit only binary data and measured values, you can equip all SIPROTEC devices with these protection interfaces.

The attainable distance in multimode optical fibers is limited by 2 factors.

- Bandwidth length product
  Typical for 62.5 µm/125 µm optical fibers: 400 MHz x km to 800 MHz x km
  Typical for 50 µm/125 µm optical fibers: 400 MHz x km to 1200 MHz x km
- Fiber attenuation
  The typical attenuation of a 62.5 µm/125 µm optical fiber is from 0.9 dB/km to 1 dB/km for light with the wavelength λ = 1300 nm. 1.5 dB/km are added for splices, aging and as a reserve. An attenuation of 2.5 dB/km is used for calculation of the distance.

4.2.4.2 USART-AF-1LDFO

Description	Protection-interface module for synchronous operation with an optical interface
Product code	P1Zxxxxxxxxxx
Figure	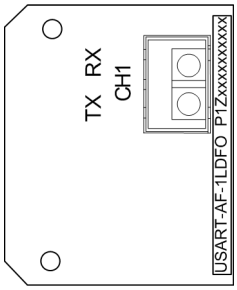
Connector type	1 x LC Duplex
Wavelength	λ = 1300 nm
Baud rate	2 Mbit/s for the protection-interface communication
Protocol	Protection-interface communication
Max. distance	25 km for singlemode optical fibers or 4 km with multimode optical fiber

Distance 4 km	
Laser class 1 as per EN 60825-1/-2	With the use of 62.5 µm/125 µm and 50 µm/125 µm optical fibers

	Minimum	**Maximum**
Transmitter power coupled in multimode optical fiber	-15.0 dBm_{avg}	-8.0 dBm_{avg}
Receiver sensitivity	-28.0 dBm_{avg}	-31.0 dBm_{avg}
Optical budget	13.0 dB	–

Distance 25 km	
Laser class 1 as per EN 60825-1/-2	With the use of 9 µm/125 µm optical fibers

	Minimum	**Maximum**
Transmitter power coupled in singlemode optical fiber	-15.0 dBm_{avg}	-8.0 dBm_{avg}
Receiver sensitivity	-28.0 dBm_{avg}	-31.0 dBm_{avg}
Optical budget	13.0 dB	–

4.2.4.3 USART-AG-1LDFO

Description	Protection-interface module for synchronous operation with an optical interface
Product code	P1Zxxxxxxxxxx

Figure	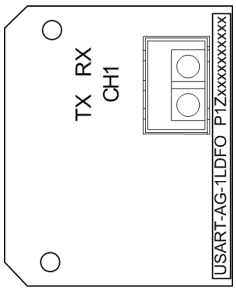
Connector type	1 x LC Duplex
Wavelength	λ = 1300 nm
Baud rate	2 Mbit/s for the protection-interface communication
Protocol	Protection-interface communication
Max. line length	60 km for singlemode optical fibers or 8 km with multimode optical fiber

Distance 8 km	
Laser class 1 as per EN 60825-1/-2	With the use of 62.5 µm/125 µm and 50 µm/125 µm optical fibers

	Minimum	**Maximum**
Transmitter power coupled in multimode optical fiber	-5.0 dBm_{avg}	0 dBm_{avg}
Receiver sensitivity	-34.0 dBm_{avg}	-34.5 dBm_{avg}
Optical budget	29.0 dB	–

NOTE

If you use the protection-interface module USART-AG-1LDFO for distances under 4 km, then connect 2 attenuators 7XV5107-0AA00. To continue using the Duplex LC plugs, attach both attenuators at one end of the remote connection (see the following figure).

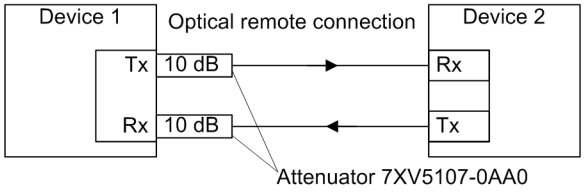

[dwdaempf-030211-01.tif, 2, en_US]

Figure 4-7 Optical Remote Connection with Attenuators

Distance 60 km	
Laser class 1 as per EN 60825-1/-2	With the use of 9 µm/125 µm optical fibers

	Minimum	**Maximum**
Transmitter power coupled in singlemode optical fiber	-5.0 dBm_{avg}	0 dBm_{avg}
Receiver sensitivity	-34.0 dBm_{avg}	-34.5 dBm_{avg}
Optical budget	29.0 dB	–

NOTE

If you use the module USART-AG-1LDFO for distances under 25 km, connect 2 attenuators 7XV5107-0AA00. To continue using the Duplex LC plugs, attach both attenuators at one end of the remote connection (see *Figure 4-7*).

4.2.4.4 USART-AH-1LDFO

NOTE

Use the protection-interface module USART-AH-1LDFO paired with USART-AJ-1LDFO only.

Description	Protection-interface module for synchronous operation with an optical interface In particular, a bidirectional data exchange through a single optical fiber is possible with the USART-AJ-1LDFO module.
Product code	P1Zxxxxxxxxxx
Figure	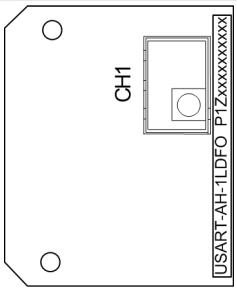
Connector type	1 x LC Single
Wavelength	λ = 1300 nm
Baud rate	2 Mbit/s for the protection-interface communication
Protocol	Protection-interface communication
Max. line length	40 km for singlemode optical fibers

Distance 40 km	
Laser class 1 as per EN 60825-1/-2	With the use of 9 µm/125 µm optical fibers

	Minimum	**Maximum**
Transmitter power coupled in the singlemode optical fiber	-8.0 dBm_{avg}	-3.0 dBm_{avg}
Receiver sensitivity	-33.0 dBm_{avg}	-38.0 dBm_{avg}
Optical budget	25.0 dB	–

4.2.4.5 USART-AJ-1LDFO

NOTE

Use the protection-interface module USART-AJ-1LDFO paired with USART-AH-1LDFO only.

Description	Protection-interface module for synchronous operation with 1 optical interface In particular, a bidirectional data exchange through a single optical fiber is possible with the USART-AH-1LDFO module.
Product code	P1Zxxxxxxxxxx

Figure	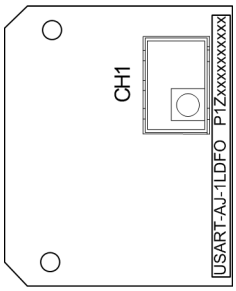
Connector type	1 x LC Single
Wavelength	λ = 1550 nm
Baud rate	2 Mbit/s for the protection-interface communication
Protocol	Protection-interface communication
Max. line length	40 km for singlemode optical fibers

Distance 40 km	
Laser class 1 as per EN 60825-1/-2	With the use of 9 µm/125 µm optical fibers

	Minimum	**Maximum**
Transmitter power coupled in singlemode optical fibers	-8.0 dBm_{avg}	-3.0 dBm_{avg}
Receiver sensitivity	-33.0 dBm_{avg}	-38.0 dBm_{avg}
Optical budget	25.0 dB	–

4.2.4.6 USART-AK-1LDFO

Description	Protection-interface module for synchronous operation with an optical interface
Product code	P1Zxxxxxxxxxx
Figure	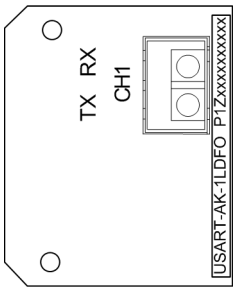
Connector type	1 x LC Duplex
Wavelength	λ = 1550 nm
Baud rate	2 Mbit/s for the protection-interface communication
Protocol	Protection-interface communication
Max. line length	100 km for singlemode optical fibers

Distance 100 km	
Laser class 1 as per EN 60825-1/-2	With the use of 9 µm/125 µm optical fibers

	Minimum	**Maximum**
Transmitter power coupled in the singlemode optical fiber	-5.0 dBm_{avg}	-0.0 dBm_{avg}
Receiver sensitivity	-34.0 dBm_{avg}	-34.05 dBm_{avg}
Optical budget	29.0 dB	–

NOTE

If you use the protection-interface module USART-AK-1LDFO for distances under 50 km, then connect 2 attenuators 7XV5107-0AA00. To continue using the Duplex LC plugs, attach both attenuators at one end of the remote connection (see *Figure 4-7*).

4.2.4.7 USART-AW-2LDFO

Description	Protection-interface module for synchronous operation with 2 optical interfaces
Product code	P1Zxxxxxxxxxx
Figure	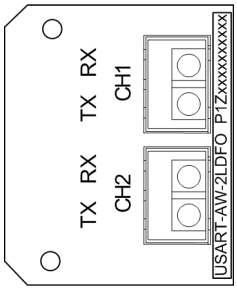
Connector type	2 x LC Duplex
Wavelength	λ = 1300 nm
Baud rate	2 Mbit/s for the protection-interface communication
Protocol	Protection-interface communication
Max. line length	25 km for singlemode optical fibers or 4 km with multimode optical fiber

Distance 4 km	
Laser class 1 as per EN 60825-1/-2	With the use of 62.5 µm/125 µm and 50 µm/125 µm optical fibers

	Minimum	**Maximum**
Transmitter power coupled in multimode optical fiber	-15.0 dBm_{avg}	-8.0 dBm_{avg}
Receiver sensitivity	-28.0 dBm_{avg}	-31.0 dBm_{avg}
Optical budget	13.0 dB	–

Distance 25 km	
Laser class 1 as per EN 60825-1/-2	With the use of 9 µm/125 µm optical fibers

	Minimum	**Maximum**
Transmitter power coupled in the singlemode optical fiber	-15.0 dBm_{avg}	-8.0 dBm_{avg}
Receiver sensitivity	-28.0 dBm_{avg}	-31.0 dBm_{avg}
Optical budget	13.0 dB	–

4.2.4.8 USART-AU-2LDFO

Description	Protection-interface module for synchronous or asynchronous operation with 2 optical interfaces
Product code	P1Zxxxxxxxxxx

Figure	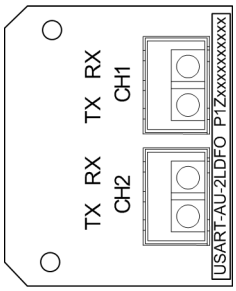
Connector type	2 x LC Duplex
Wavelength	λ = 1300 nm
Baud rate	2 Mbit/s for the protection-interface communication
Protocol	Protection-interface communication
Max. line length	60 km for singlemode optical fibers or 8 km with multimode optical fiber

Distance 8 km	
Laser class 1 as per EN 60825-1/-2	With the use of 62.5 µm/125 µm and 50 µm/125 µm optical fibers

	Minimum	**Maximum**
Transmitter power coupled in multimode optical fiber	-5.0 dBm_{avg}	0.0 dBm_{avg}
Receiver sensitivity	-34.0 dBm_{avg}	-34.5 dBm_{avg}
Optical budget	29.0 dB	–

NOTE

If you use the protection-interface module USART-AU-2LDFO for distances under 4 km, then connect 2 attenuators 7XV5107-0AA00. To continue using the Duplex LC plugs, attach both attenuators at one end of the remote connection (see *Figure 4-7*).

Distance 60 km	
Laser class 1 as per EN 60825-1/-2	With the use of 9 µm/125 µm optical fibers

	Minimum	**Maximum**
Transmitter power coupled in multimode optical fiber	-5.0 dBm_{avg}	0.0 dBm_{avg}
Receiver sensitivity	-34.0 dBm_{avg}	-34.5 dBm_{avg}
Optical budget	29.0 dB	–

NOTE

If you use the module USART-AU-2LDFO for distances under 25 km, connect 2 attenuators 7XV5107-0AA00. To continue using the Duplex LC plugs, attach both attenuators at one end of the remote connection (see *Figure 4-7*).

4.2.4.9 USART-AX-2LDFO

NOTE

Use the protection-interface module USART-AX-2LDFO paired with USART-AY-2LDFO only.

Description	Protection-interface module for synchronous or asynchronous operation with 2 optical interfaces In particular, a bidirectional data exchange through a single optical fiber is possible with the USART-AY-2LDFO module.
Product code	P1Zxxxxxxxxxx
Figure	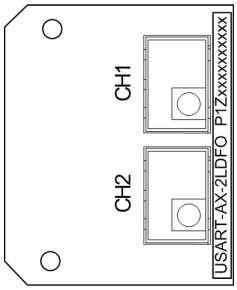
Connector type	2 x LC Single
Wavelength	λ = 1300 nm
Baud rate	2 Mbit/s for the protection-interface communication
Protocol	Protection-interface communication
Max. line length	40 km for singlemode optical fibers

Distance 40 km	
Laser class 1 as per EN 60825-1/-2	With the use of 9 µm/125 µm optical fibers

	Minimum	**Maximum**
Transmitter power coupled in the singlemode optical fiber	-8.0 dBm_{avg}	-3.0 dBm_{avg}
Receiver sensitivity	-33.0 dBm_{avg}	–
Optical budget	25.0 dB	–

4.2.4.10 USART-AY-2LDFO

NOTE

Use the protection-interface module USART-AY-2LDFO paired with USART-AX-2LDFO only.

Description	Protection-interface module for synchronous or asynchronous operation with 2 optical interfaces In particular, a bidirectional data exchange through a single optical fiber is possible with the USART-AX-2LDFO module.
Product code	P1Zxxxxxxxxxx
Figure	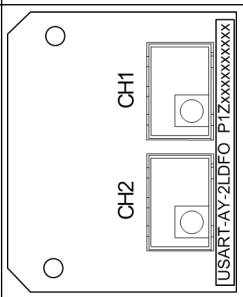
Connector type	2 x LC Single
Wavelength	λ = 1550 nm
Baud rate	2 Mbit/s for the protection-interface communication

Protocol	Protection-interface communication
Max. line length	40 km for singlemode optical fibers

Distance 40 km	
Laser class 1 as per EN 60825-1/-2	With the use of 9 µm/125 µm optical fibers

	Minimum	**Maximum**
Transmitter power coupled in the singlemode optical fiber	-8.0 dBm_{avg}	-3.0 dBm_{avg}
Receiver sensitivity	-33.0 dBm_{avg}	–
Optical budget	25.0 dB	–

4.2.4.11 USART-AV-2LDFO

Description	Protection-interface module for synchronous or asynchronous operation with 2 optical interfaces
Product code	P1Zxxxxxxxxxx
Figure	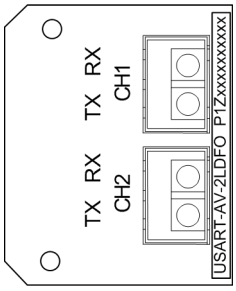
Connector type	2 x LC Duplex
Wavelength	λ = 1550 nm
Baud rate	2 Mbit/s for the protection-interface communication
Protocol	Protection-interface communication
Max. line length	100 km for singlemode optical fibers

Distance 100 km	
Laser class 1 as per EN 60825-1/-2	With the use of 9 µm/125 µm optical fibers

	Minimum	**Maximum**
Transmitter power coupled in the singlemode optical fiber	-5.0 dBm_{avg}	-0.0 dBm_{avg}
Receiver sensitivity	-34.0 dBm_{avg}	-34.5 dBm_{avg}
Optical budget	29.0 dB	–

NOTE

If you use the protection-interface module USART-AV-2LDFO for distances under 50 km, then connect 2 attenuators 7XV5107-0AA00. To continue using the Duplex LC plugs, attach both attenuators at one end of the remote connection (see *Figure 4-7*).

4.2.5 Ethernet Modules

4.2.5.1 Operation of Ethernet Modules

The Ethernet modules of the SIPROTEC 5 series can be operated optionally with or without integrated switch function. This applies for the electrical as well as the optical module. This function can be selected via the

parameterization. It is not necessary to make any indication in the order. The optical Ethernet modules are compatible with the EN100 modules of the SIPROTEC 4 series. If the RSTP protocol or the HSR protocol is active, the optical modules of the SIPROTEC 4 series and the SIPROTEC 5 series can be operated in a ring.

When using SIPROTEC 4 devices with module firmware ≤ V4.05 and SIPROTEC 5 devices, the maximum allowable number of participants is 30 devices. When using SIPROTEC 4 devices with module firmware ≥ V4.07 and SIPROTEC 5 devices, the maximum allowable number of participants is 40 devices. When using SIPROTEC 5 devices, the maximum allowable number of participants is 40 devices.

Figure 4-8 shows operation of the Ethernet modules with integrated switch function. All devices of a station are shown which are connected to one another by means of optical fibers. The devices form optical rings. In addition, 2 switches are used on the substation controller for the SICAM PAS. The 2 switches take the requirements for the redundancy into account.

Additional participants with electrical interfaces can also be connected to the SICAM PAS (for example, the DIGSI 5 control PC). An external switch is sufficient. Optical communication modules are primarily used for this topology, as there can be substantial distances between the devices.

If the Ethernet modules are installed in expansion modules with a CB202 PCB assembly, the power supply can be provided with an independent battery. The integrated switch can maintain its function when the device is switched off. The data are transmitted in optical and electric rings. This prevents opening of the ring. The ring continues to operate when 1 or more devices are switched off.

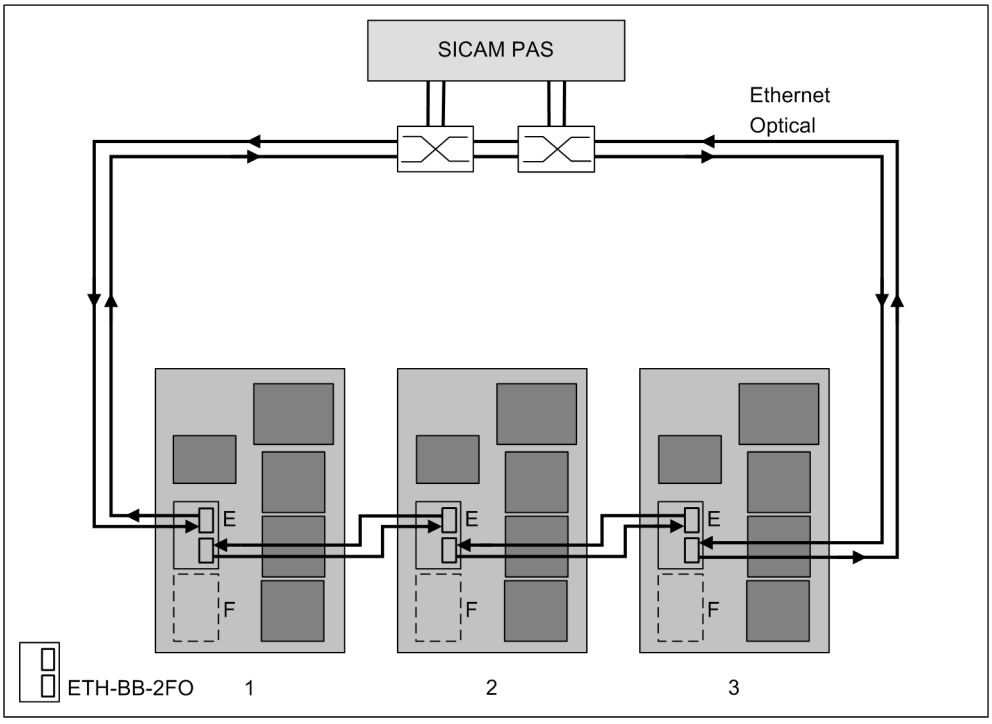

[dweth1sw-030211-01.tif, 2, en_US]

Figure 4-8 Operation of Ethernet Modules with an Integrated Switch Function

Figure 4-9 shows the operating mode without integrated switch function. Optionally, the 2nd connection can be connected to the 2nd switch. This connection is shown with a dashed line in *Figure 4-9*. The IP communication is established using the 1st connection here. If this connection fails, the system changes over to the 2nd connection within a few milliseconds. The IP connection is retained practically without interruption using the 2nd switch. This hot-standby connection redundancy increases the availability in such configurations, as shown in the following figure. The information on failure of the protection connection is transmitted to the substation automation technology.

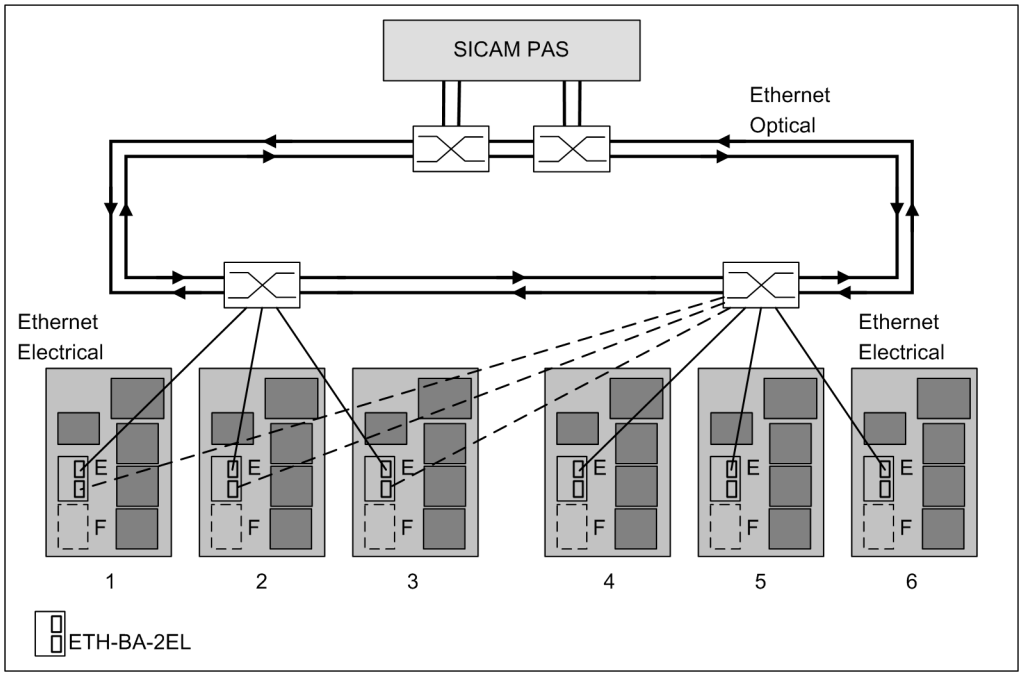

[dwethsw3-090713-01.tif, 2, en_US]

Figure 4-9 Operation of Ethernet Modules Without Integrated Switch Function with Single or Redundant Connection to the Switch

4.2.5.2 ETH-BA-2EL

Description	Communication module for the transmission of Ethernet protocols via 2 electrical interfaces
Product code	P1Zxxxxxxxxxx
Figure	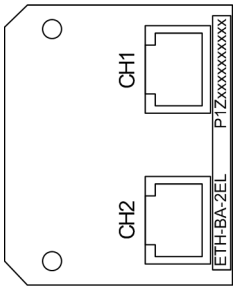
Connector type	2 x RJ45
Baud rate	100 MBit/s
Protocol	DIGSI 5 protocol (secure Web service protocol) IEC 61850 (MMS and GOOSE) DNP3 Modbus IEC 60870-5-104 PROFINET IO Synchrophasor protocol You can switch other network services like SNMP, RSTP, PRP, HSR, SNTP, and SUP Ethernet on and off.
Max. line length	20 m with Ethernet patch cable CAT 5

4.2.5.3 ETH-BB-2FO

Description	Communication module for the transmission of Ethernet protocols via 2 optical interfaces
Product code	P1Zxxxxxxxxxx
Figure	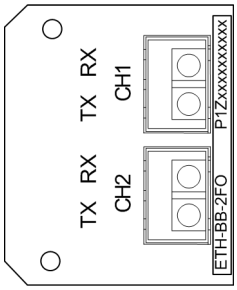
Connector type	2 x LC Duplex
Wavelength	λ = 1300 nm
Baud rate	100 Mbit/s
Protocol	DIGSI 5 protocol (secure Web service protocol) IEC 61850 (MMS and GOOSE) DNP3 Modbus TCP IEC 60870-5-104 PROFINET IO Synchrophasor protocol You can switch other network services like SNMP, RSTP, PRP, HSR, SNTP, and SUP Ethernet on and off.
Max. line length	2 km for 62.5 µm/125 µm optical fibers

Transmit Power	**Minimum**	**Typical**	**Maximum**
50 µm/125 µm, NA[1] = 0.2	-23.5 dBm	-20.0 dBm	-14.0 dBm
62.5 µm/125 µm, NA[1] = 0.275	-20.0 dBm	-17.0 dBm	-14.0 dBm

Receiver sensitivity	Maximum -12.0 dBm Minimum -31.0 dBm
Optical budget	Minimum 7.5 dB for 50 µm/125 µm, NA[1] = 0.2 Minimum 11.0 dB for 62.5 µm/125 µm, NA[1] = 0.275
Laser class 1 as per EN 60825-1/-2	With the use of 62.5 µm/125 µm and 50 µm/125 µm optical fibers
Comment: [1] Numerical aperture (NA = sin θ (launch angle))	

4.3 Measuring-Transducer Modules

4.3.1 Overview

You can install the measuring-transducer modules in base modules or 1/3 modules (plug-in module positions E and F) and in expansion modules with a CB202 module (plug-in module position M, N, or P).

4.3.2 ANAI-CA-4EL

The ports CH1 to CH4 of the measuring-transducer modules are Safety Extra Low Voltage circuits (SELV circuits). For the connection to the measuring-transducer modules, the following conditions apply:

- SELV circuits may be connected only to SELV circuits.
- Ensure that the cables of SELV circuits are routed separately from the supply circuits.
- Use shielded cables.

Product Code	P1Zxxxxxxxxxx
Figure	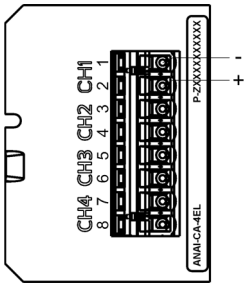
Terminal diagram	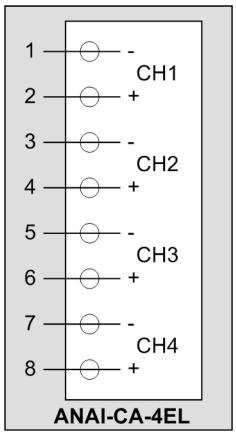
Connector type	8-pin terminal spring
Differential current input channels	4
Measuring range	DC -24 mA to +24 mA
Error limit	0.5 % of measuring range
Input impedance	140 Ω
Conversion principle	Delta-sigma (16 bit)
Permissible potential difference between channels	DC 20 V
Galvanic separation with respect to ground/housing	AC 500 V, DC 700 V
Permissible overload	DC 100 mA continuously
Measurement repetition	200 ms

4.3.3 ARC-CD-3FO

With the module, you can detect an arc in the air-insulated system part of the switchgear by way of an optical arc sensor.

Product Code	P1Zxxxxxxxxxxx
Figure	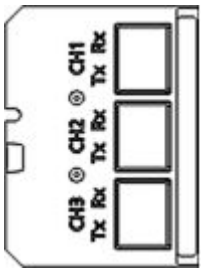
Connector type	AVAGO AFBR-4526Z
Number of sensor connections	3 point or line sensors (combinations are possible)
Fiber type	Polymer Optical Fiber (POF) 1 mm
Receiver	
Maximum	-10 dBm ± 2 dBm
Minimum	-40 dBm ± 2 dBm
Spectrum	400 nm to 1100 nm
Attenuation	In the case of polymer optical fibers, you can expect a path attenuation of 0.2 dB/m. Additional attenuation comes from the plug and the sensor head.
Optical budget [1]	Minimal 25 dB
Analog sampling rate	16 kHz
ADC type	10-bit successive approximation
Transmitter	
Type	LED
Wavelength	λ = 650 nm
Transmitter power	Minimum 0 dBm Maximum 2 dBm
Numerical aperture	0.5 [2]
Signal rate connection test	1 pulse per second
Pulse duration connection test	11 µs
Comment: [1] All values in combination with sensors approved by Siemens. [2] Numerical aperture (NA = sin θ (launch angle))	

NOTE

Laser class 1 is maintained in compliance with EN 60825-1 and EN 60825-2 when using 1 mm polymer optical fibers.

5 Working on the Device

5.1 First Steps

5.1.1 Electrical Inspection

Device Protection

DANGER

Danger when connecting the SIPROTEC 5 device

Noncompliance with the safety notes will result in death, severe injury or considerable material damage.

- ✧ The device must be situated in the operating area for at least 2 hours before you connect it to the power supply for the first time. This prevents condensate from forming in the device.
- ✧ If the device has been in storage for more than 2 years, connect it to an auxiliary voltage for 1 to 2 days. This will cause the electrolytic capacitors on the printed circuit-board assemblies to form again.

- ✧ Perform the electrical inspection.

Activating the Battery

NOTE

The battery is covered by a protective film, which also prevents premature discharge.

The battery compartment is located on the rear of the base module. You do not have to take the battery out of the compartment in order to remove the protective film.

- ✧ Pull out the battery compartment including the battery.
- ✧ Remove the protective film from the battery by simply pulling on the film tab.
- ✧ Push the battery compartment including the battery back in again.

Grounding a Device

The SIPROTEC 5 devices are protection class I equipment must be connected with the system ground prior to commissioning.

- ✧ Ground each module with solid low-impedance system grounding (cross-section ≥ 4.0 mm^2 (≥ 0.16 in^2), grounding area ≥ M4, torque: at least 1.2 Nm).

Connecting a Device

- ✧ Connect all cables and lines. Use the connection diagrams in the Hardware and Device manuals.
- ✧ Tighten the terminal screws to the prescribed torques (see chapter *Tightening Torques for Terminal Screws, Page 200*).

Grounding an On-Site Operation Panel

- ✧ Join several on-site operation panels to one another with firm contact.
  Siemens recommends the use of contact washers on painted metal mounting walls. If the mounting wall is not metallic, place a metal layer, for example a metal sheet, between the mounting wall and the on-site operation panels. Then connect this sheet to the system grounding.

Safety Notes

DANGER

Danger during electrical inspection

Noncompliance with the safety notes will result in death, severe injury or considerable material damage.

- ✧ Comply with all given safety notes when carrying out the electrical inspection.
- ✧ Please note that hazardous voltages are present when you perform the electrical inspection.

- ✧ During the electrical inspection, check that the device becomes ready for operation once it has been connected to the power supply.

Performing the Electrical Inspection

- ✧ Connect the power supply.
- ✧ Activate the power supply.
  After (initial) activation, there is no Device Configuration File (CFG) in the device and the device is in fallback mode. The green and red LEDs light up in fallback mode.
- ✧ Once you have loaded the CFG file into the SIPROTEC 5 device, the green **RUN** LED lights up continuously and the device is ready for operation.
- ✧ If the device does not assume the normal operating state (process mode), switch off the power supply. Disconnect the wiring and the grounding.
- ✧ Pack this device and return it to the manufacturer, stating the defect. Use transport packaging that meets the requirements of standard ISO 2248.

5.2 Expanding Modular Devices

5.2.1 Flush-Mounting Devices

5.2.1.1 Basic Rules for Expansion

NOTE

Prepare the following tools for the device expansion:

- Phillips screwdriver size PZ1 and PZ2
- Screwdriver DIN 4 x 0.8
- During assembly, use the prescribed torques (see chapter *6.13 Design Data*).

Comply with the following basic rules when extending devices:

✧ Always fit the base module on the left in the 1st device row.

✧ Always fit the expansion modules from left to right.

✧ Always fit the expansion module with the key switches as the 1st module next to the base module.

✧ Always fit the expansion modules without LEDs last.

✧ Always install a power-supply module PS203 on the left as the first unit in the 2nd device row.

✧ Please note that the PS203 must always have the same rated voltage as the base module.

✧ Install only I/O modules without LEDs in the 2nd device row.

[dweinzei-030211-01.tif, 1, --_--]

Figure 5-1 Device Row of a Flush-Mounting Device

5.2.1.2 Expanding 1st Device Row

Preparation

NOTE

Reordered modules are not contained in the original device configuration. Use DIGSI to perform the corresponding extension in the **Hardware and Protocols** Editor.

Carry out the steps described in this chapter if you wish to expand an installed device later on with expansion modules.

- ✧ Shut down the device.
- ✧ Use the screwdriver to carefully bend the left and right spring clips on the rear plate terminals outwards.
- ✧ Completely detach the wired current and voltage terminal blocks from the device.
- ✧ Remove all communication lines.
- ✧ Remove the plastic screw covers.
- ✧ Remove the device.
- ✧ Expand the cut-out in the control cabinet.
- ✧ Then continue with assembly.

Assembling Devices

- ✧ Remove the bus cover from the extreme right-hand module of the device to be extended.
- ✧ Remove the plastic screw covers from the expansion module.
- ✧ Remove the right sealing strips from the base device.
- ✧ Place the expansion module on the right next to the device. Insert the 2 hinged angle clips of the expansion module in the cut-outs of the device.
- ✧ Slip ring the expansion module in the direction of the device so that the bottom snap-in spring engages.
- ✧ Bolt the 2 on-site operation panels of the module to one another through the contact tab.
- ✧ Check that the bus connection is screwed on at the extreme right of the expansion module.

Installation and Commissioning

- ✧ Reinstall the device.
- ✧ Reinstall the plastic screw covers.
- ✧ Refasten the terminal blocks and the necessary communication lines.
- ✧ Connect the current and voltage blocks of the expansion module.
- ✧ Connect any available plug-in modules.
- ✧ Use the supplied grounding cable to connect the expansion module with the device and reconnect the device to service ground.
- ✧ Extend the device configuration in DIGSI and load this configuration to the device.
- ✧ Resume operation of the device.

5.2.1.3 Expanding Devices with 2nd Device Row

Preparation

NOTE

Reordered modules are not contained in the original device configuration. Use DIGSI to perform the corresponding extension in the **Hardware and Protocols** Editor.

Carry out the steps described in this chapter if you want to expand an installed device later on with a 2nd device row.

- ✧ Shut down the device in the 1st device row.
- ✧ Use the screwdriver to carefully bend the left and right spring clips on the rear plate terminals outwards.
- ✧ Completely detach the wired current and voltage terminal blocks from the device.
- ✧ Remove all communication lines.
- ✧ Remove the plastic screw covers.
- ✧ Remove the device from the 1st device row.
- ✧ Remove the device bus cover from the extreme right-hand expansion module of the device to be extended.
- ✧ Bolt the sealing plate and the adaptor bracket according to *Figure 5-4* on the outer right expansion module of the 1st device row. The sealing plate, adaptor angle, and screws are included with the supply of the power-supply module PS203.
- ✧ Attach the cable holder for the connecting cable of the 2nd device row to the back side of the angle rail.
- ✧ Clip the connecting cable into the cable holder.

NOTE

Observe the direction of the connecting cable.

Note that the available cable end for the connection of the 2nd device row must be longer than the cable end for the connection of the 1st device row.

- ✧ Insert the cable in the rubber seals, and introduce the seals in the slot of the angle rail (see *Figure 5-3*)

Assembling the Devices

- ✧ Install the angle rail.
- ✧ Install the 1st device row above the angle rail.
- ✧ Install the 2nd device row below the angle rail.
- ✧ Screw the 2 handle moulds of the connecting cable to the 1st and 2nd device row.

NOTE

Make sure that the handle moulds are not rotated during assembly so as not to damage the contact surfaces of the plugs.

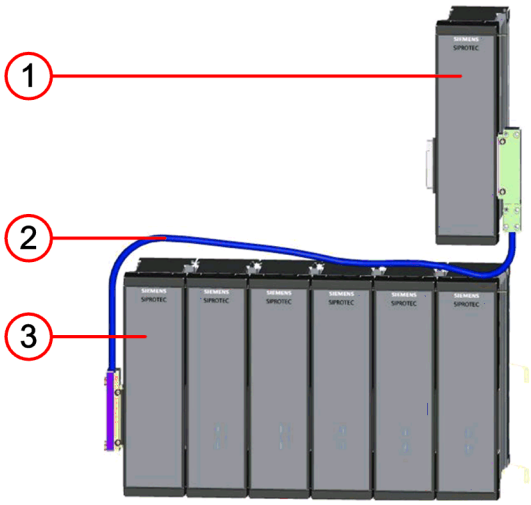

[dw_2zauba-020414-01, 2, --_--]

Figure 5-2 Expansion with 2nd Device Row

(1) Extreme right expansion module of the 1st device row
(2) Connecting cable
(3) 2nd device row

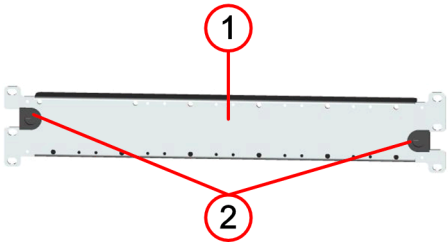

[dw_schiene-020414-01, 1, --_--]

Figure 5-3 Angle Rail

(1) Angle rail
(2) 2 Rubber seals

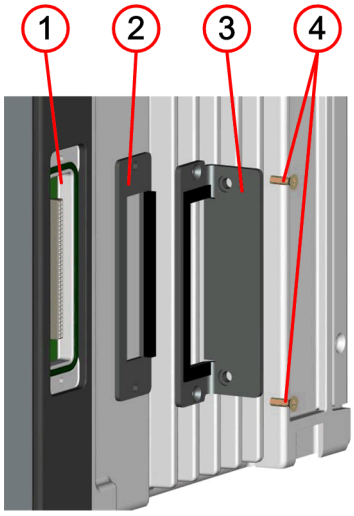

[dw_winkel-020414-01, 1, --_--]

Figure 5-4 Sealing Plate and Adaptor Bracket for the Expansion Module of the 1st Device Row

(1) Device bus of the outermost right expansion module of the 1st device row
(2) Sealing plate
(3) Adaptor angle
(4) 2 mounting screws

Installation and Commissioning

- ✧ Reinstall the plastic screw covers.
- ✧ Refasten the terminal blocks and the necessary communication lines.
- ✧ Connect the current and voltage blocks of the expansion module.
- ✧ Connect any available plug-in modules.
- ✧ Use the supplied grounding cable to connect the expansion module with the device and reconnect the device to service ground.
- ✧ Extend the device configuration in DIGSI and load this configuration to the device.
- ✧ Resume operation of the device.

5.2.2 Surface-Mounting Devices with Integrated On-Site Operation Panel

5.2.2.1 Basic Rules for Expansion

NOTE

Prepare the following tools for the device expansion:

- Phillips screwdriver size PZ1 and PZ2
- Screwdriver DIN 4 x 0.8
- During assembly, use the prescribed torques (see chapter *6.13 Design Data*).

Comply with the following basic rules when extending devices:

- Always fit the base module on the right in the 1st device row.
- Always fit the expansion modules from right to left.
- Always fit the on-site operation panel of the base module on the left.
- Always fit the on-site operation panels of the expansion modules from left to right.
- Always fit the on-site operation panel of the expansion module with the key switches in the 1st place next to the on-site operation panel of the base module.
- Always fit the on-site operation panels without LEDs last.
- Join the on-site operation panels to one another with 2 mounting brackets.
- Always install a power-supply module PS203 on the right as the first unit in the 2nd device row.
- Please note that the PS203 must always have the same rated voltage as the base module.
- In the 2nd device row, you do not need any on-site operation panels, mounting brackets, or distance frames.

NOTE

When expanding a device in the 1st device row, order 2 mounting brackets that match the width of the expanded device.

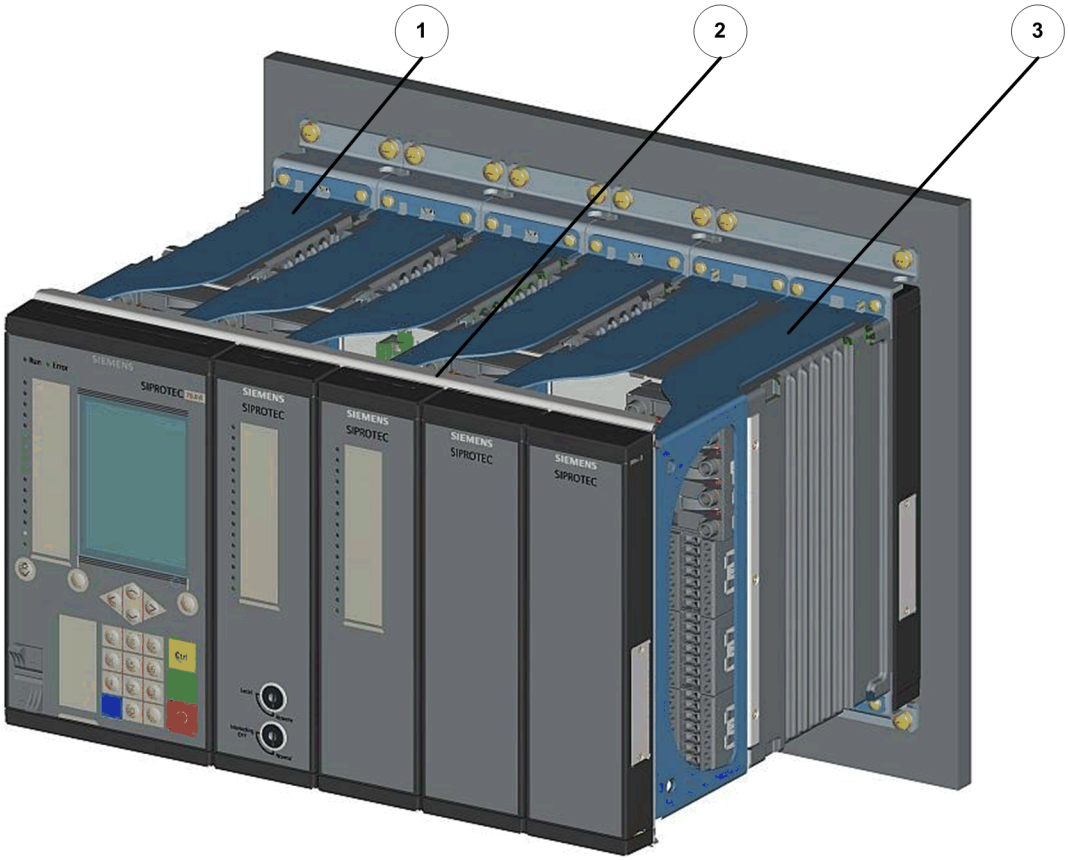

[dwauize1-040211-01.tif, 1, --_--]

Figure 5-5 Device Row

(1) Distance frame
(2) Mounting bracket
(3) Distance frame on base module rotated by 180°

5.2.2.2 Expanding 1st Device Row

Preparation

NOTE

Reordered modules are not contained in the original device configuration. Use DIGSI to perform the corresponding extension in the **Hardware and Protocols** Editor.

Carry out the steps described in this chapter if you wish to expand an installed device later on with expansion modules.

✧ Shut down the device.

✧ Detach all on-site operation panels from the distance frames.

✧ Remove the mounting brackets.

NOTE

If the device is an expanded device, then detach the 2 mounting brackets. You must replace these mounting brackets with 2 new mounting brackets that match the width of the device.

✧ Use a screwdriver to carefully bend the left and right spring clips on the terminals outwards.

- ✧ Completely detach the wired current and voltage terminal blocks from the device.
- ✧ Remove all communication lines.
- ✧ Remove the device completely.

Assembling the On-Site Operation Panel Into One Block

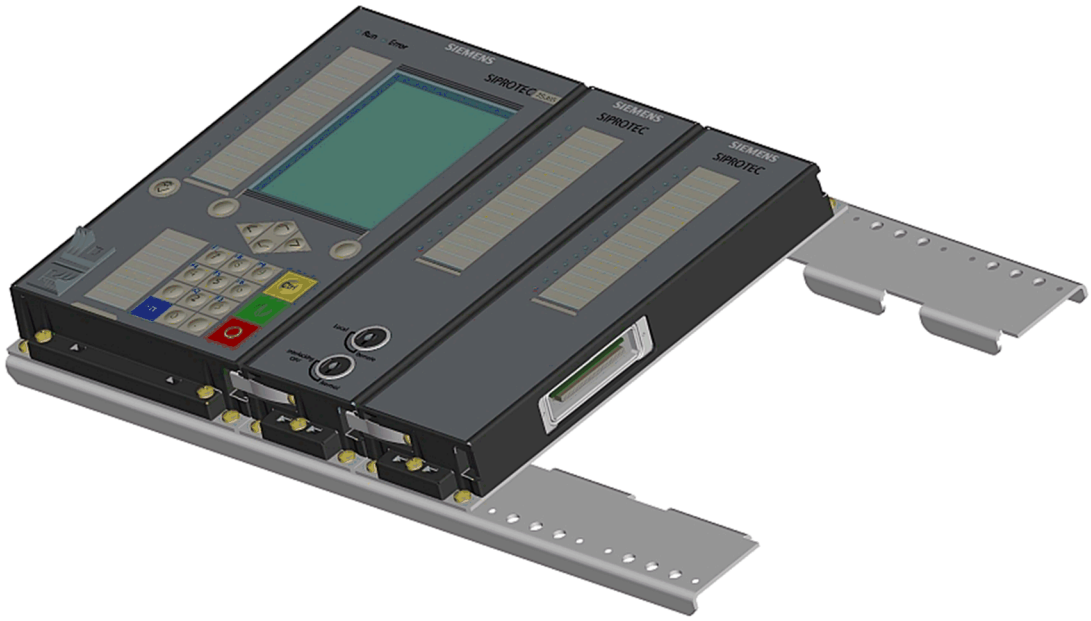

[dwaublo1-040211-01.tif, 1, --_--]

Figure 5-6 On-Site Operation Panel Fitted on Mounting Bracket

- ✧ Place the 2 mounting brackets intended for expansion in parallel to one another on a flat surface.
- ✧ Bolt the 1st (left-hand) on-site operation panel to the 2 mounting brackets. Do not firmly tighten the screws.
- ✧ Place the 2nd on-site operation panel on the right of the 1st one and bolt these panels onto the 2 mounting brackets. Do not firmly tighten the screws. Make sure that the snap-in spring is engaged!
- ✧ Bolt the 2 operation panels to one another through the contact tab. Do not firmly tighten the screws.
- ✧ Repeat the last 2 steps for the remaining operation panels. Leave all screws loose.

Assembling Devices

- ✧ Remove the distance frame from the expansion module.
- ✧ Remove the bus cover from the extreme left-hand module.
- ✧ Remove the plastic screw covers from the extreme left-hand module and from the expansion module.
- ✧ Place the expansion module on the left next to the device. Insert the 2 hinged angle clips of the expansion module in the cut-outs of the device.
- ✧ Swivel the expansion module in the direction of the device so that the bottom snap-in spring engages.
- ✧ Bolt the contact tab to the 2 modules.

Installation and Commissioning

- ✧ Install the distance frame intended for expansion.
- ✧ Wire and, if required, fasten the current and voltage terminal blocks.
- ✧ Fit the device back onto the wall without fastened on-site operation panels.

- ✧ Use the supplied grounding cable to connect the expansion module with the device and reconnect the device to service ground.
- ✧ Fasten the connecting cable for the on-site operation panel on the extreme left-hand operation panel of those on-site operation panels assembled beforehand into a block.
- ✧ Place the block of assembled operation panels on the distance frames of the device. In doing so, guide the connecting cable for the on-site operation panel through the cut-outs of the distance frame to the terminal of the basic module.
- ✧ Fasten the connecting cable for the on-site operation panel to the basic module.
- ✧ Bolt the operation panels to the distance frames and firmly tighten the screws.
- ✧ Tighten all loose screws on the contact tabs and on the mounting brackets.
- ✧ Reinstall all plastic screw covers.
- ✧ Extend the device configuration in DIGSI and load this configuration to the device.
- ✧ Resume operation of the device.

5.2.2.3 Expanding Devices with 2nd Device Row

Preparation

NOTE

Reordered modules are not contained in the original device configuration. Use DIGSI to perform the corresponding extension in the **Hardware and Protocols** Editor.

Carry out the steps described in this chapter if you wish to expand an installed device later on with expansion modules.

- ✧ Shut down the device in the 1st device row.

NOTE

The next 6 steps are only necessary if the 1st device row is not accessible.

If the left side of the 1st device row is accessible, then the complete device can remain on the wall.

- ✧ Detach all on-site operation panels from the distance frames.
- ✧ Remove the mounting brackets.
- ✧ Use the screwdriver to carefully bend the left and right spring clips on the rear plate terminals outwards.
- ✧ Completely detach the wired current and voltage terminal blocks from the device.
- ✧ Remove all communication lines.
- ✧ Completely remove the device from the 1st device row.
- ✧ Remove the device bus cover from the extreme left-hand expansion module of the device to be extended.
- ✧ Bolt the sealing plate and the adaptor bracket according to *Figure 5-8* on the outer left expansion module of the 1st device row. The sealing plate, adaptor angle, and screws are included with the supply of the power-supply module PS203.

Assembling the Devices

- ✧ Install the 1st device row.

NOTE

The distance between 1st and 2nd device row must be no more than 80 mm (3.15 in).

- ✧ Install the 2nd device row.
- ✧ Unscrew the captive screws from the handle mould.
- ✧ Install the handle mould.
- ✧ Install the screws for the handle mould from the view of the adaptor bracket. Thus, later accessibility is ensured without having to remove the entire device.

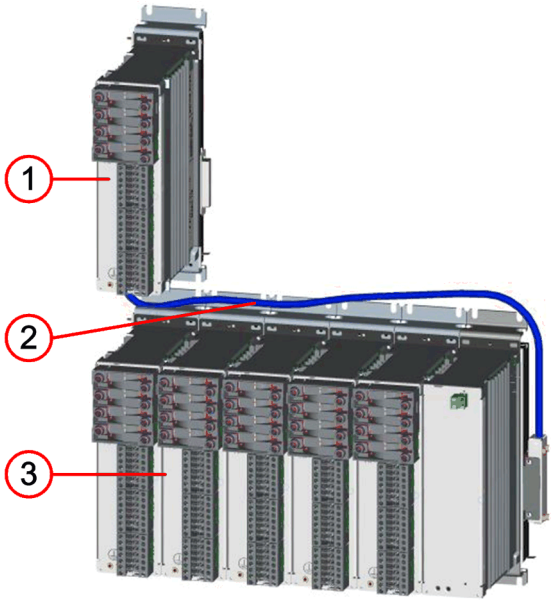

[dw_2zeauf-020414-01, 1, --_--]

Figure 5-7 Expansion with 2nd Device Row (View of the Installation Level without Display of the On-site Operation Panel)

(1) Extreme left expansion module of the 1st device row
(2) Connecting cables
(3) 2nd device row

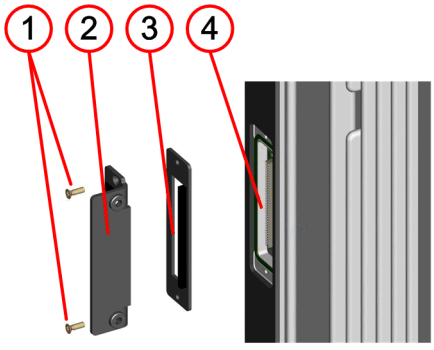

[dw_winauf-020414-01, 1, --_--]

Figure 5-8 Sealing Plate and Adaptor Bracket for the Expansion Module of the 1st Device Row

(1) 2 mounting screws
(2) Adaptor angle

(3) Sealing plate

(4) Device bus of the outermost left expansion module of the 1st device row

Installation and Commissioning

- ✧ Reinstall the plastic screw covers.
- ✧ Refasten the terminal blocks and the necessary communication lines.
- ✧ Connect the current and voltage blocks of the expansion module.
- ✧ Connect any available plug-in modules.
- ✧ Use the supplied grounding cable to connect the expansion module with the device and reconnect the device to service ground.
- ✧ Extend the device configuration in DIGSI and load this configuration to the device.
- ✧ Resume operation of the device.

5.2.3 Surface-Mounting Devices with Detached On-Site Operation Panel

5.2.3.1 Basic Rules for Expansion

NOTE

Prepare the following tools for the device expansion:

- Phillips screwdriver size PZ1 and PZ2
- Screwdriver DIN 4 x 0.8
- During assembly, use the prescribed torques (see chapter *6.13 Design Data*).

Comply with the following basic rules when extending devices:

- Always fit the base module on the right in the 1st device row.
- Always fit the expansion modules from right to left.
- Always fit the on-site operation panel of the base module on the left.
- Always fit the on-site operation panels of the expansion modules from left to right.
- Always install a power-supply module PS203 on the right as the first unit in the 2nd device row.
- Note that the PS203 must always have the same rated voltage as the base module.
- The distance between the device and the on-site operation panel is limited to not more than 5 m (196.85 in) by the length of the connecting cable.

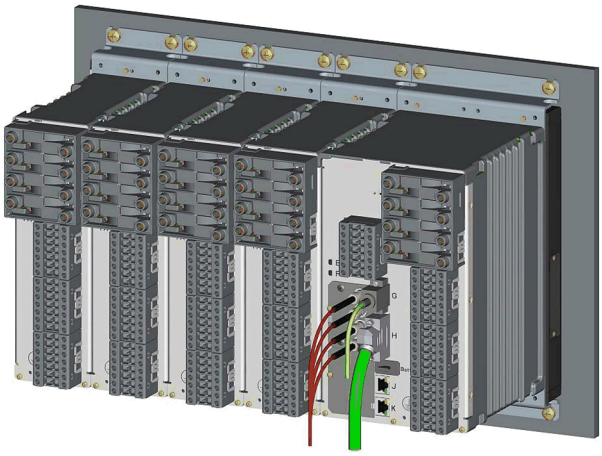

[dwauizei-040211-01.tif, 1, --_--]

Figure 5-9 Device Row

[dwabosop-040211-01.vsd, 1, en_US]

Figure 5-10 Detached On-Site Operation Panel

5.2.3.2 Expanding 1st Device Row

Preparation

NOTE

Reordered modules are not contained in the original device configuration. Use DIGSI to perform the corresponding extension in the **Hardware and Protocols** Editor.

Carry out the steps described in this chapter if you wish to expand an installed device later on with expansion modules.

- ✧ Shut down the device.
- ✧ Use a screwdriver to carefully bend the left and right spring clips outwards.
- ✧ Completely detach the wired current and voltage terminal blocks from the device.
- ✧ Remove all communication lines.

- If you want to expand the device, then detach it completely.
- If you want to expand the on-site operation panel, then remove the on-site operation panel from the installation space.

NOTE

The device and the on-site operation panel can be expand independently of one another. Therefore, you need only detach those components that are to be expanded.

Installing the Devices (with View to the Installation Plane)

- Remove the bus cover from the extreme left-hand module of the device to be expanded.
- Remove the plastic screw covers from the extreme right-hand module and from the expansion module.
- Place the expansion module on the left next to the device. Insert the 2 hinged angle clips of the expansion module in the cut-out of the device.
- Swivel the expansion module in the direction of the device so that the bottom snap-in spring engages.
- Bolt the on-site operation panels of the 2 modules to one another through the contact tab.
- Check that the bus connection is screwed on at the extreme left of the expansion module.

Assembly and Commissioning

- Reinstall the plastic screw covers.
- Use the supplied grounding cable to connect the expansion module with the device and reconnect the device to service ground.
- Fit the device back onto the wall.
- Expand the on-site operation panel with the on-site operation panel of the expansion modules. Make sure that the bus connection is plugged in reliably and that the snap-in springs have engaged.
- Bolt the on-site operation panels to one another through the contact tab.
- Check that the bus connection on the expansion module on the extreme right is covered.
- Connect all communication lines again.
- Extend the device configuration in DIGSI and load this configuration to the device.
- Resume operation of the device.

Expanding Devices with the 2nd Device Row

- When expanding a surface-mounting device with a 2nd device row, follow the instructions in chapter *5.2.2.3 Expanding Devices with 2nd Device Row*.

5.3 Plug-In Modules

5.3.1 Fasteners

The fasteners of the plug-in modules are shown in the following figure regarding the example of an installed module and an empty, covered slot.

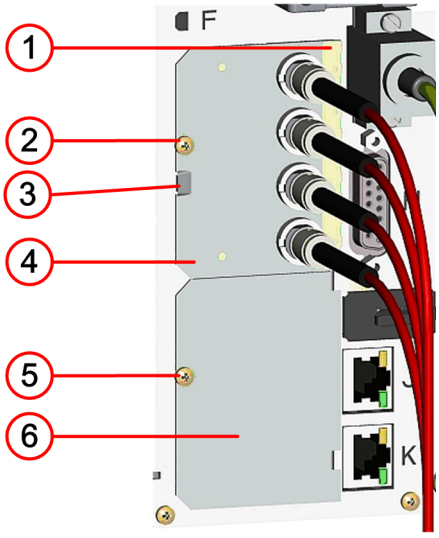

[le_fxing_elements, 1, --_--]

Figure 5-11 Fasteners

(1) EMC spring contact
(2) Fastening screw
(3) Cut-out for prying out the modules
(4) Plug-in module
(5) Fastening screw
(6) Cover plate

5.3.2 Installation

NOTE

Reordered modules are not contained in the original device configuration. Use DIGSI to perform the corresponding extension in the **Hardware and Protocols** Editor.

Preparing Installation

DANGER

Danger due to live voltage when installing the plug-in modules.

Noncompliance with the safety notes will result in death or severe injuries.

✧ Install plug-in modules on the electrically deactivated device only.

CAUTION

Exercise caution with laser beams of the optical plug-in modules.

Noncompliance with the safety notes can result in medium-severe or slight injuries.

✧ Do not look directly into the optical fiber terminals of the active optical plug-in modules, not even with optical devices. The laser beams can damage the eyes.

✧ De-energize the device.

NOTE

When using optical communication modules, Laser class 1 is maintained in compliance with EN 60825-1 and EN 60825-2 when using optical fibers ≤ 62.5 µm/125 µm.
When using the ARC-CD-3FO module, Laser class 1 is maintained in compliance with EN 60825-1 and EN 60825-2 when using 1 mm polymer optical fibers.

✧ In the case of a surface-mounted device with integrated on-site operation panel, remove the entire on-site operation panel.

✧ Undo the fastening screw and remove the cover plate from the plug-in module position.

Installing the Plug-In Module

✧ Push in the plug-in module on the inner guide as far as it will go.

✧ Ensure that the EMC contact spring is seated correctly.

✧ Bolt down the plug-in module on the assembly frame to a torque of 0.4 Nm.

✧ Connect the lines to the terminals.

✧ Then check for secure attachment of the connectors.

✧ If necessary, fit the on-site operation panel again.

Completing Installation

✧ Resume operation of the device.

5.3.3 Removing

Accessories

NOTE

Seal an unused plug-in module position with a cover plate.

✧ Order the **module cover plate** set of parts to cover the unused plug-in module position.

Preparing Removal

DANGER

Risk of live voltage when removing the plug-in modules.

Noncompliance with the safety notes will result death or severe injuries.

✧ Remove plug-in modules on the electrically deactivated device only.

CAUTION

Exercise caution with laser beams of the optical plug-in modules.

Noncompliance with the safety notes can result in medium-severe or slight injuries.

✧ Do not look directly into the optical fiber terminals of the active optical plug-in modules, not even with optical devices. The laser beams can damage the eyes.

✧ De-energize the device.

NOTE

Laser class 1 is adhered to in compliance with EN 60825-1 and EN 60825-2, in the case of ≤ 62.5 µm/ 125 µm optical fibers.

✧ In the case of a surface mounting device with integrated on-site operation panel, remove the on-site operation panel before the base module.

Removing the Plug-In Module

✧ Remove all connecting lines.

✧ Undo the fastening screw with which the plug-in module is fixed on the device.

✧ Insert a screwdriver (DIN 4 x 0.8) in the cut-out underneath the oblong hole.

✧ Carefully pull out the plug-in module.

Fastening the Cover Plate

✧ Fasten the cover plate with the fixing screw to a torque of 0.4 Nm. The fixing screw is included in the set of parts.

Completing Removal

✧ In the case of a surface mounting device with integrated local operation panel, fit the on-site operation panel of the base module again.

✧ Resume operation of the device.

5.3.4 Replacement

Preparing for Replacement

DANGER

Danger due to live voltage when replacing the plug-in modules.

Noncompliance with the safety notes will result in death or severe injuries.

✧ Install plug-in modules on the electrically deactivated device only.

CAUTION

Exercise caution with laser beams of the optical plug-in modules.

Noncompliance with the safety notes can result in medium-severe or slight injuries.

✧ Do not look directly into the optical fiber terminals of the active optical plug-in modules, not even with optical devices. The laser beams can damage the eyes.

✧ De-energize the device.

NOTE

Laser class 1 is adhered to in compliance with EN 60825-1 and EN 60825-2, in the case of ≤ 62.5 µm/ 125 µm optical fibers.

When using the ARC-CD-3FO module, Laser class 1 is maintained in compliance with EN 60825-1 and EN 60825-2 when using 1-mm plastic optical fibers.

✧ In the case of a surface-mounted device with integrated on-site operation panel, remove the on-site operation panel before the base module.

✧ Remove all communication lines.

✧ Undo the fastening screw with which the plug-in module is fixed on the device.

✧ Insert a screwdriver (DIN 4 x 0.8) in the cut-out underneath the elongated hole in the assembly frame and disengage the plug-in module.

✧ Carefully pull out the plug-in module.

Fastening the Plug-In Module

✧ Push in the new plug-in module on the inner guide of the plug-in module position until it moves no further.

✧ Bolt down the plug-in module on the assembly frame to a torque of 0.4 Nm.

✧ Connect the lines to the terminals.

✧ Then check for secure attachment of the connectors.

✧ If necessary, fit the on-site operation panel again.

Completing Replacement

✧ Place the device is service again and perform a firmware update of the communication modules.

NOTE

If you have not cabled the optical fiber plug-in modules, then seal the terminals with protective covers. This prevents soiling of the terminals.

5.4 Arc Sensors for Module: ARC-CD-3FO

5.4.1 Point Sensor

5.4.1.1 Description

The point sensor detects arcs in the control cabinets of the air-insulated system part.

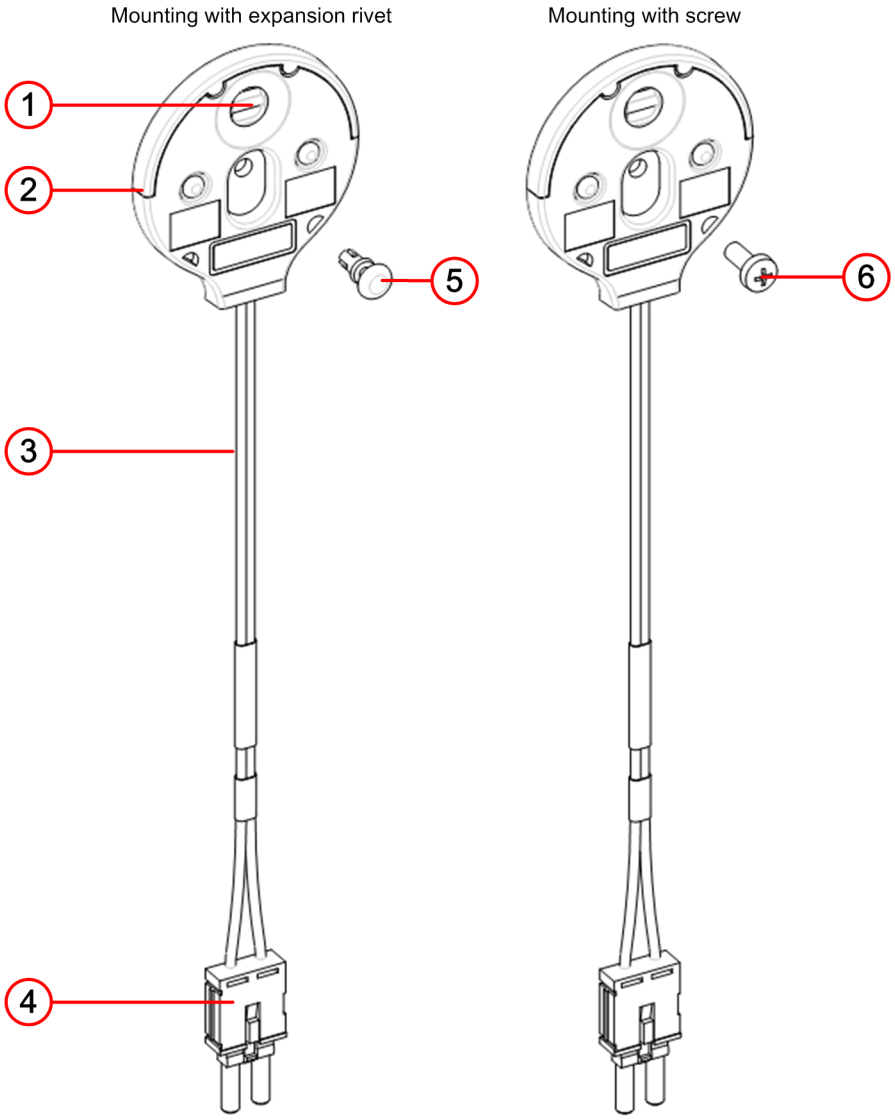

[dwsensap-210314-01, 2, en_US]

Figure 5-12 Point Sensor for the Arc-Protection Module: ARC-CD-3FO

(1) Optically active zone
(2) Sensor head
(3) Supply line
(4) Plug to the arc-protection module: ARC-CD-3FO
(5) Expansion rivet, 4x7
(6) Screw, M4

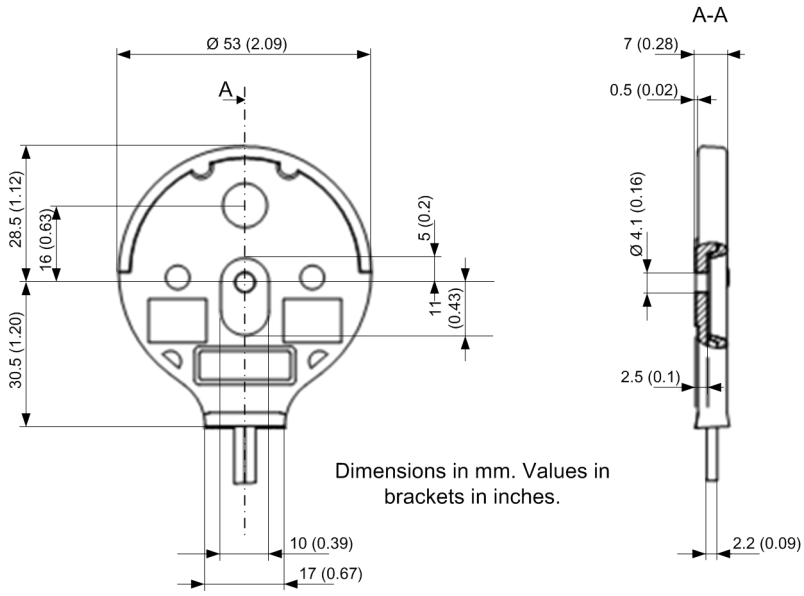

[dw_point_sensor_dimensions, 1, en_US]

Figure 5-13 Dimensional Drawing of the Point Sensor

The sensitivity of the point sensors with line lengths up to 4 m typically begins at 10 kLux.

5.4.1.2 Installation

The point sensors are mounted in the different compartments of a control cabinet, see the following figure. The point sensor detects light in an angle of ± 60°.

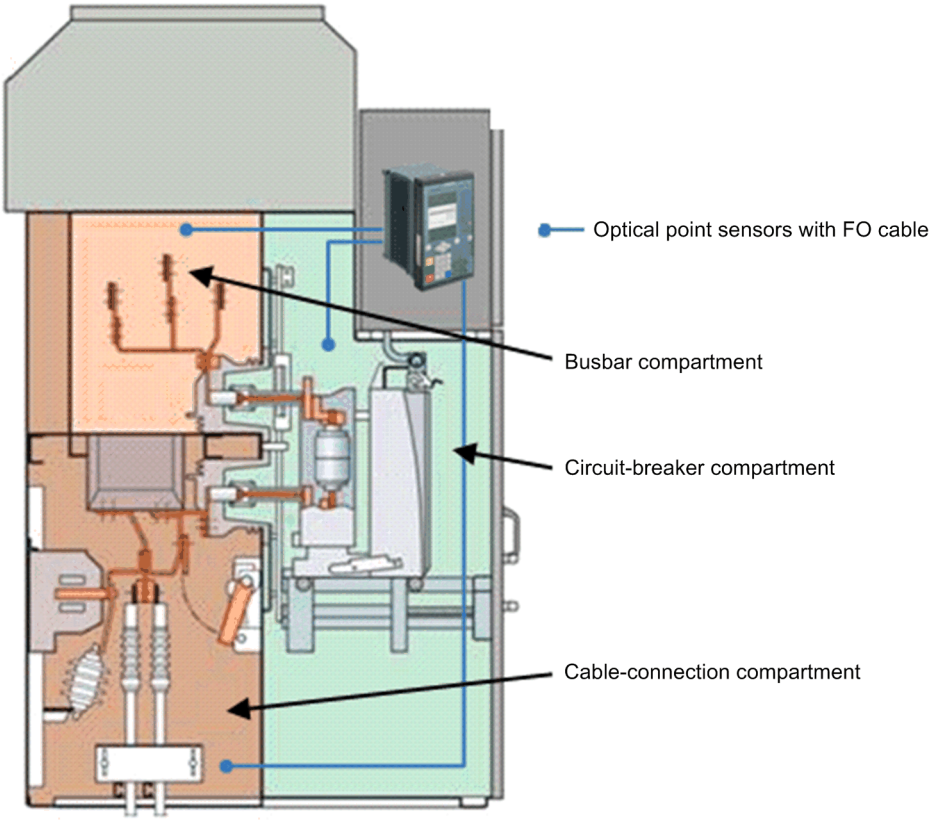

[dw_position_sensor, 2, en_US]

Figure 5-14 Mounting Position of the Optical Arc Sensors in the Control Cabinet

NOTE

Install the arc sensors in the control cabinet in such a way that the relevant sections are not hidden behind other system components!

Preparing Installation

CAUTION

Exercise caution with laser beams of the optical plug-in modules.

Noncompliance with the safety notes can result in medium-severe or slight injuries.

✧ Do not look directly into the fiber-optic terminals of the active optical plug-in modules, not even with optical devices. The laser beams can damage the eyes.

✧ De-energize the device.

NOTE

Laser class 1 is maintained in compliance with EN 60825-1 and EN 60825-2 when using 1 mm polymer optical fibers.

✧ You need 1 hole in the control cabinet for fastening.

Mounting the Point Sensor

✧ With a wall thickness of 1.5 mm to 2.5 mm, fasten the point sensor using an expansion rivet. This expansion rivet is included in the scope of delivery.
Hole diameter = 4.1 mm to 4.2 mm

✧ Insert the expansion rivet through the hole in the point sensor and through the hole in the wall. Press the head of the expansion rivet firmly into the base body.

✧ As an alternative, you can also fasten the point sensor using a screw (M4). Tighten the screw with a torque of 0.2 Nm.

✧ Siemens recommends fastening the line to the wall below the point sensor. The line must not be bent or stressed in any other way.
R = 50 mm (minimum bending radius)
Maximum continuous tensile force = 1 N

NOTE

Order the point sensor with a suitable line length. If the line is too long, it must not be shortened! It must be rolled up with a minimum diameter of 0.3 m because of the optical loss.
Obey the general recommendations of the manufacturers of optical lines.

✧ Remove the dust caps from the plug and connect the line to the plug-in module.

NOTE

The contact surfaces of the plug must be clean.

✧ Then check for secure attachment of the plug.

Completing Installation

✧ Resume operation of the device.

NOTE

In order to warrant safe functioning, the affected sensor must be substituted after detection of an arc.

NOTE

Hereby, Siemens declares that until now, UL has neither investigated whether the device can detect an arc-protection fault, neither if in case of an arc-protection fault, the safety of personnel and system is guaranteed.

5.4.2 Line Sensor

5.4.2.1 Description

The line sensor detects arcs in the control cabinets of the air-insulated system part.

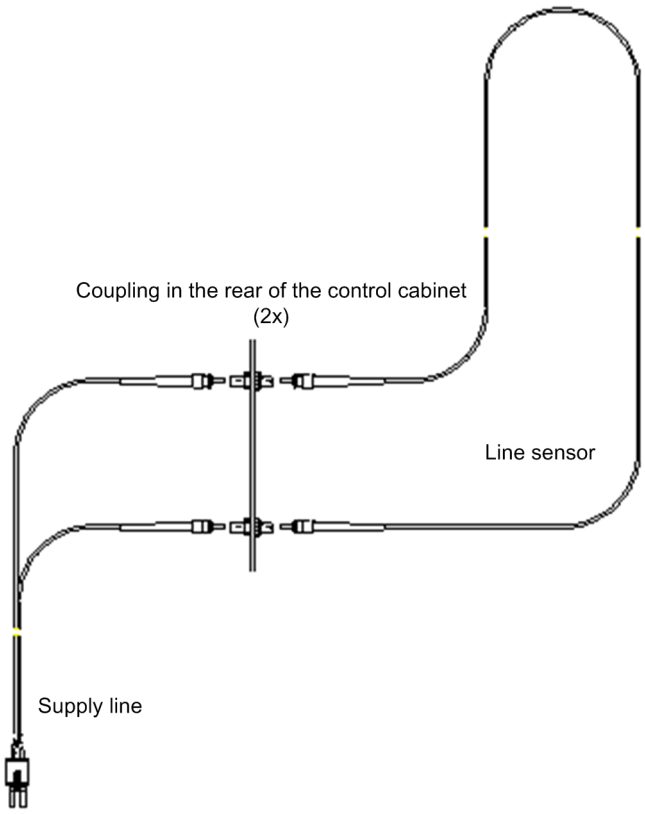

[dw_line_sensor_mounting, 1, en_US]

Figure 5-15 Line Sensor for the Arc-Protection Module ARC-CD-3FO

5.4.2.2 Installation

Depending on the application, the line sensor can be, for example, laid along the busbar. Additional point sensors are installed in order to identify the arcs in the circuit-breaker compartment and in the cable connection compartment.

Depending on the possibilities of implementing this in the control cabinet, the line sensor can also be passed through the breaker compartment and the cable connection compartment of the feeders in addition to the busbar compartment.

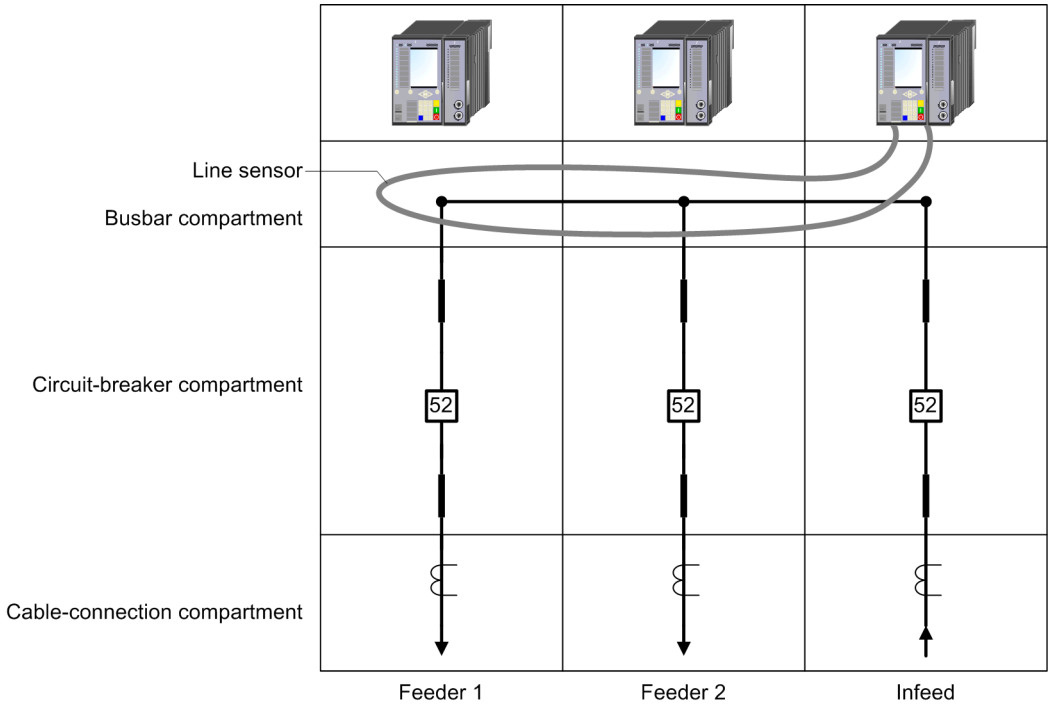

[dw_Liniensensor, 1, en_US]

Figure 5-16 Laying a Line Sensor Along the Busbar

NOTE

Install the arc sensors in the control cabinet in such a way that the relevant sections are not hidden behind other system components!

Preparing Installation

CAUTION

Exercise caution with laser beams of the optical plug-in modules.

Noncompliance with the safety notes can result in medium-severe or slight injuries.

✧ Do not look directly into the fiber-optic terminals of the active optical plug-in modules, not even with optical devices. The laser beams can damage the eyes.

✧ De-energize the device.

NOTE

Laser class 1 is maintained in compliance with EN 60825-1 and EN 60825-2 when using 1 mm polymer optical fibers.

✧ You need 2 holes (10.0 mm in diameter) in the control cabinet for fastening. Siemens recommends a distance of approx. 10 cm.

Mounting the Line Sensor

- ✧ Fasten both busbar-coupler pieces in both the holes in the control-cabinet wall.
  The busbar-coupler pieces (incl. nut and lock washer) are included in the scope of delivery for the sensor.
- ✧ Connect one end of the line sensor to a busbar-coupler piece and route the sensor fiber along the section to be protected, for example, the busbar.
- ✧ Make sure that the piece of fiber exposed to the arc has a minimum size of 0.5 m and that the distance from the potential arc source is a maximum of 0.25 m.
  If these boundary conditions cannot be satisfied, please contact our Customer Support for further questions.
- ✧ Fasten the sensor fiber, for example, with cable fasteners.
  Ensure that the fiber is not damaged or broken when fastening.
- ✧ The sensor fiber is non-conductive. However, ensure that the sensor fiber is laid in such way as to avoid contact with hot or energized parts.
- ✧ During installation, make sure that the sensor and the line are not damaged by sharp edges.
- ✧ Sensor areas that should not react to light can be covered up.
- ✧ Pass the sensor fiber back again and fasten it with the 2nd busbar-coupler piece.
- ✧ The line must not be bent or stressed in any other way.
  R = 50 mm (minimum bending radius)
  Maximum continuous tensile force = 1 N
- ✧ Fasten the supply line with the busbar-coupler piece to the side of the protection device.
- ✧ Remove the dust caps from the plug and connect the supply line to the plug-in module.

NOTE

Order the line sensor and the supply line with a suitable line length. If the line is too long, it must not be shortened! It must be rolled up with a minimum diameter of 0.3 m because of the optical loss.
Obey the general recommendations of the manufacturers of optical lines.

NOTE

The contact surfaces of the plug must be clean.

Completing Installation

- ✧ Resume operation of the device.

NOTE

In order to warrant safe functioning, the affected sensor must be substituted after detection of an arc.

NOTE

Hereby, Siemens declares that until now, UL has neither investigated whether the device can detect an arc-protection fault, neither if in case of an arc-protection fault, the safety of personnel and system is guaranteed.

5.5 Battery

5.5.1 Description

The battery lies in an externally accessible battery compartment. The battery compartment is located on the rear of the base module. You need not open the device when replacing the battery.

If the auxiliary voltage fails, the battery assures continued operation of the internal clock and storage of specific data (statistic values, values of thermal models) for at least 6 months. The parameterization, logs, and fault records are stored in a non-volatile memory and are fail-safe at all times.

The device cyclically checks the charge of the battery. The **`Battery fault`** indication is issued if the actual voltage falls below the minimum.

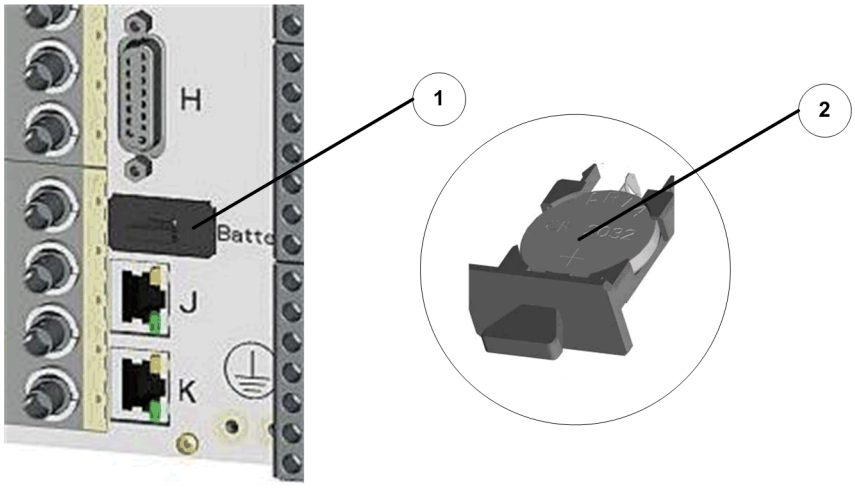

[dwbatpos-040211-01.tif, 1, --_--]

Figure 5-17 Position of the Battery Compartment in the Modular Device

(1) Battery compartment

(2) Battery

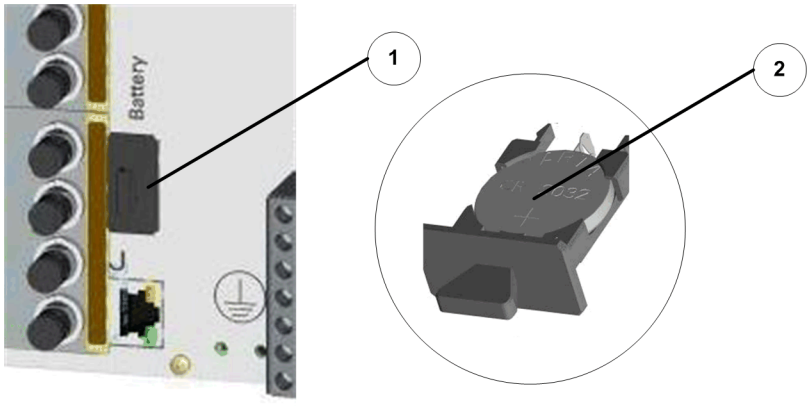

[dwbatpo1-240613-01.tif, 1, --_--]

Figure 5-18 Position of the Battery Compartment in the Non-Modular Device (7xx82)

(1) Battery compartment

(2) Battery

5.5.2 Replacing the Battery

Safety Notes

NOTICE

Exercise caution when replacing the battery.

Noncompliance with the specified measures can result in material damage.

✧ Replace the battery only with the type specified in the Technical Data.

NOTICE

Exercise caution when disposing of the battery. The battery contains lithium. Lithium batteries are subject to the statutory regulations governing the disposal of batteries.

Noncompliance with the specified measures can result in material damage.

✧ Dispose of the battery in compliance with national and international regulations. Hand in the battery at an approved collection point, or dispose of it in the collection bins provided for the purpose.

Error Message on the Device

The **`Battery fault`** message is displayed on the device.

✧ Replace the battery.

Replacing the Battery

Use only a battery of the type specified in the Technical Data.

✧ Pull out the battery compartment.

✧ Remove the battery.

✧ Place the new battery in the battery compartment so that the positive pole points upwards.

✧ Push the battery compartment back in again.

✧ Check whether the **`Battery fault`** indication is displayed.

✧ The **`Battery fault`** message is reset within 24 hours or after switching the device on and off again.

You have replaced the battery successfully if the message is no longer displayed.

NOTE

If you replace the battery without a power supply connected, all battery-backed data will be lost.

5.6 SDHC Memory Card

The SDHC memory card (Secure Digital High Capacity) is used to store records from the 7KE85 fault recorder.

[dw_SDHC, 1, --_--]

Figure 5-19 SDHC Memory Card

NOTE

Reading the data of the SDHC memory card with a PC is not intended.
Avoid too frequent insertion cycles!

NOTE

Use only the original SDHC memory card (ACCESAR) approved by Siemens for the 7KE85 fault recorder.

Replacing the SDHC Memory Card

- ✧ De-energize the device.
- ✧ Remove the sealing cap.
- ✧ Unlock the card by pressing the turquoise eject lever.

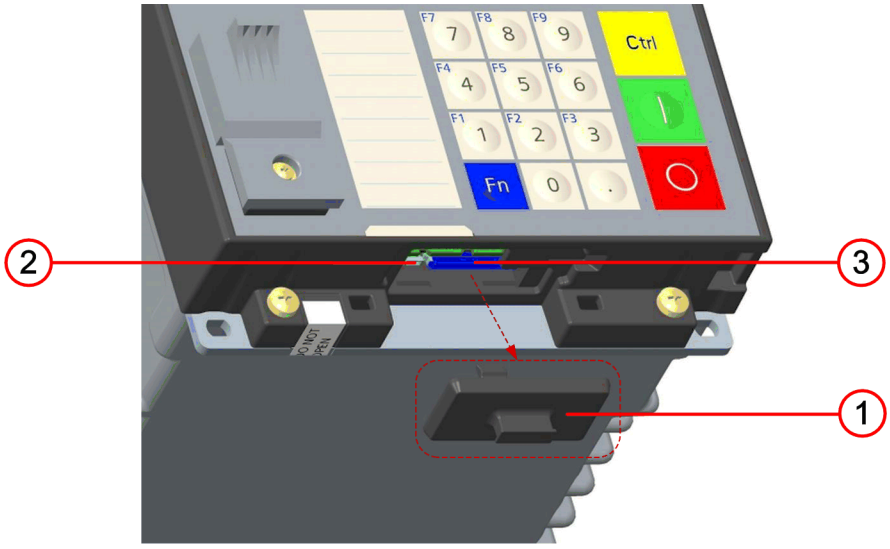

[le_Remove_cap_and_SDHC, 1, --_--]

Figure 5-20 Removing the Sealing Cap and SDHC Memory Card

(1) Push the holder, push the sealing cap to the back and remove it
(2) Unlock the eject lever
(3) Remove the SDHC memory card

✧ Unpack the new SDHC memory card.
Do not touch the contacts of the SDHC memory card with your fingers.

✧ Insert the new SDHC memory card.
When inserting, make sure that the SDHC memory card is properly aligned: The side with the contacts must be facing up, the side with the sticker facing down.

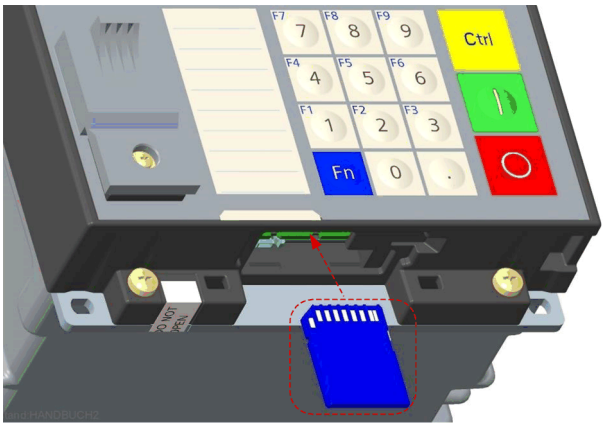

[dw_insert_SDHC, 1, --_--]
Figure 5-21 Inserting the SDHC Memory Card into the Device

CAUTION

Exercise caution when removing the SDHC memory card from a defective device.
If you want to remove the SDHC memory card from a defective device and to insert the card into another healthy device and if the data must be kept, note the following:

Noncompliance with the specified measures can result in loss of data.

✧ To avoid a reformatting of the SDHC memory card, you must first import the parameters of the defective device to another device.

✧ You can insert the SDHC memory card in the other device and use it only then.

✧ The recordings on the SDHC memory card from the defective device can still be read in the other device.

✧ Insert the sealing cap back again.

✧ Resume operation of the device.

5.7 Installing Current and Voltage Terminals

5.7.1 Description

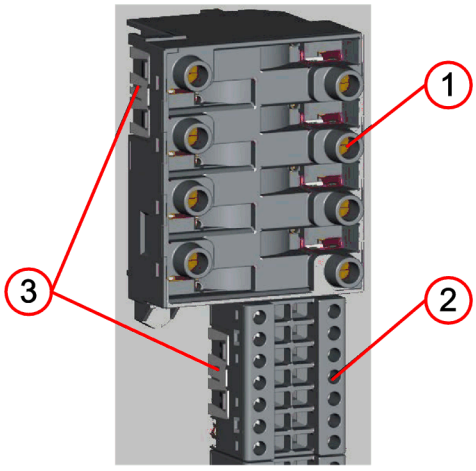

[dwklepos-030211-01.tif, 1, --_--]

Figure 5-22 Current and Voltage Terminals with Spring Clips

(1) Current-terminal block
(2) Voltage-terminal block
(3) Spring clips

The spring clips fix the terminal block in place.

[sc_klepos-020414-01, 1, --_--]

Figure 5-23 Voltage Terminal with Screw Connection

Current-Terminal Block of the Modular Devices

The following transformers can optionally be installed in a current-terminal block for modular devices:

- 4 protection-class current transformers
- 3 protection-class current transformers and 1 instrument transformer
- 4 instrument transformers

Protection transformers on modular devices are transformers with a rated current of 1 A or 5 A and a device-dependent measuring range of 20 x rated current or 100 x rated current.

NOTE

You can read the type of the current transformer used on the side of the terminal block:

- C73334A 1A ***7*** = 4 protection-class current transformers
- C73334A 1A ***8*** = 3 protection-class current transformers and 1 instrument transformer
- C73334A 1A ***9*** = 4 instrument transformers

Current-Terminal Block for Non-Modular Devices (7xx82)

The following transformers can be installed optionally in a current-terminal block for non-modular devices:

- 4 protection-class current transformers
- 3 protection-class current transformers and 1 instrument transformer

Protection transformers on non-modular devices are transformers with a rated current of 1 A or 5 A and a measuring range of 50 x rated current.

Instrument transformers are transformers with a rated current of 1 A or 5 A and a measuring range of 1.6 x rated current. Instrument transformers are also referred to as sensitive protection transformers or sensitive ground-current transformers.

NOTE

You can read the type of the current transformer used on the side of the terminal block:

- C73334A 1A ***5*** = 4 protection-class current transformers
- C73334A 1A ***6*** = 3 protection-class current transformers and 1 instrument transformer

Use the cross connector for voltage terminals shown on the right in the figure below for grouping binary inputs and relay outputs.

[dwquerve-030211-01.tif, 1, --_--]

Figure 5-24 Cross Connector for Current (Left) and Voltage Terminals (Right)

[dwkappst-030211-01.tif, 1, --_--]

Figure 5-25 Covering Cap for Current-Terminal Block

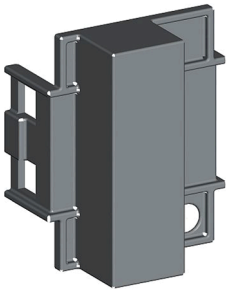

[dwkappsp-030211-01.tif, 1, --_--]

Figure 5-26 Covering Cap for Voltage-Terminal Block

Cover caps for sealing the contacts of the terminal block can be ordered as accessories.

Terminal Designations

The current terminals have different designations in DIGSI, in the configurator, and in the device. The following table provides an overview of the different terminal designations and order numbers of the terminals.

Terminal	Configurator	DIGSI	Display on the Device	Order Numbers
Modular device				
4 protection-class current transformers	TypeA-Curr.term., 4x prot.	Current 4x protection	TBC4PROTA	C73334A 1A ***7***
3 protection-class current transformers and 1 instrument transformer	TypeA-Curr.term., 3xprot. 1xsens.	Current 3x prot., 1x sensitive	TBC3PROTA1M	C73334A 1A ***8***
4 instrument transformers	TypeA-Curr.term., 4x measurem.	Current 4x sensitive	TBC4M	C73334A 1A ***9***
Non-modular device				
4 protection-class current transformers	TypeB-Curr.term., 4x prot.	Current 4x protection	TBC4PROTB	C73334A 1A ***5***
3 protection-class current transformers and 1 instrument transformer	TypeB-Curr.term., 3xprot. 1xsens.	Current 3x prot., 1x sensitive	TBC3PROTB1M	C73334A 1A ***6***

5.7.2 Connections of Current Terminals

Fasteners

The fasteners for the transformer connection are part of the current terminal (housing side). They are made of a stress-crack and corrosion-free alloy. The head shape of the clamping screw allows the use of a DIN 5.5 x 1.0 screwdriver or a PZ2 screwdriver. Siemens recommends a PZ2 screwdriver.

Connection Elements and Conductor Cross-Sections

The following connection types are possible:

- Stranded-wire conductor with ring-type lug
- Stranded-wire conductor with bootlace ferrule
- Solid conductor

Siemens recommends the use of ring-type lugs with the dimensions shown in the following figure. Use copper cables only.

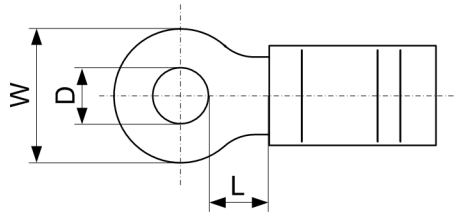

[dwringka-030211-01.tif, 1, en_US]

Figure 5-27 Ring-Type Lug

D (for bolt)	5.0 mm
W	9.5 mm
L	7.1 mm to 7.7 mm

In order to maintain the insulation route, you must use insulated cable lugs or you must insulate the crimping zone (for example, by using heat-shrink tube insulation)

Siemens recommends ring-type lugs of the PIDG series made by Tyco Electronics.

Use copper conductors only, at least certified for a temperature of +105 °C. Use prepared solid conductors intended for single or multi-wiring connection, maximum 2 wires per pole, and for usage of ferrules, crimped-on pressure wire connectors (ring-type and pin-type).

2 terminal lugs can be installed for each connection.

[dwklest1-030211-01.tif, 1, --_--]

Figure 5-28 Example of a Current Terminal with Connection of Cross Connectors and Single Cables

[dwklest2-030211-01.tif, 1, --_--]

Figure 5-29 Example of a Current Terminal with Connection of 2 Single Cables

You can connect solid conductors as well as stranded-wire conductors with ring-type lug or bootlace ferrule. For each connection, you can install up to 2 single cables of the same type and the same cross-section.

Bridges can be used as an alternative for horizontally arranged clamping points. If bridges are used, only ring-type lugs may be used.

The following cable cross-sections can be used for the connection of single cables:

Cable cross-section	AWG (**A**merican **W**ire **G**auge) 14-10 (2.0 mm² to 4.0 mm²)
Ferrule with plastic shroud	L = 10 mm or L = 12 mm
Stripped length	15 mm
For use without ferrule	Use solid copper cables only.

NOTE

Always guide the solid conductor or stranded-wire conductor with bootlace from the left- or right-hand side ferrule into the terminal. Making contact from the center is not permitted.

Mechanical Requirements

The fasteners and their associated components are designed for the following mechanical requirements:

Permissible tightening torque at clamping screw	2.7 Nm For solid conductors, the max. permissible tightening torque is 2 Nm.
Permissible tensile force for each connected conductor	80 N following IEC 60947-1 (VDE 660, part 100)

5.7.3 Connections of Voltage Terminals

5.7.3.1 Connections of Voltage Terminals with Spring Clips

Fasteners

The fasteners for the voltage connection are part of the voltage terminal (housing side). They are made of a stress-crack and corrosion-free alloy. The head shape of the clamping screw allows the use of a DIN 4.0 x 0.8 screwdriver or a PZ1 screwdriver. Siemens recommends a PZ1 screwdriver.

Connection Elements and Conductor Cross-Sections

The single cable connection type is available for the connection. You can connect solid conductors as well as stranded-wire conductors with and without ferrules as single cables. Siemens recommends the use of twin ferrules of series PN 966 144 made by Tyco Electronics for the connection of 2 single cables.

The following cable cross-sections can be used for the connection of single cables:

Cable cross-section	AWG (**A**merican **W**ire **G**auge) 20-14 (0.02 in^2 to 0.10 in^2) solid or cable with UL listed ferrules Use copper conductors only, at least certified for a temperature of +105 °C.
Ferrule with plastic shroud	L = 12 mm
(Stripped length) for use without ferrule	12 mm, only copper lines may be used.

Single cables and bridges can be connected together for horizontally arranged clamping points. Note that adjacent bridges are installed reciprocally.

Mechanical Requirements

The fasteners and their associated components are designed for the following mechanical requirements:

Permissible tightening torque at clamping screw	1.0 Nm
Permissible tensile force for each connected conductor	50 N following IEC 60947-1 (VDE 660, part 100)

5.7.3.2 Connections of Voltage Terminals with Screw Connection

For the connection of the following modules, Phoenix terminals are used (see *Figure 5-23*):

- Power-supply module PS203
- Plug-in module assembly with integrated power supply CB202
- Input module IO230, IO231
- Input and output module IO110
- Measuring-transducer modules ANAI

Connection Elements and Conductor Cross-Sections

The following cable cross-sections can be used for the connection of single cables:

Cable cross-section	AWG (**A**merican **W**ire **G**auge) 22-12 (0.02 in^2 to 0.10 in^2) solid or cable with UL listed ferrules At least certified for a temperature of +105 °C
Ferrule with plastic shroud	L = 10 mm
(Stripped length) for use without ferrule	10 mm, only copper lines may be used.

Mechanical Requirements

The fasteners and their associated components are designed for the following mechanical requirements:

Permissible tightening torque at clamping screw	0.6 Nm

5.7.4 Installation and Removal

✧ Switch off the device before starting work.

Assembly tool

✧ Use a screwdriver (DIN 4 x 0.8).

Removal

✧ Use a screwdriver to carefully bend the left and right spring clips outwards.

✧ Carefully pull out the terminal block.

✧ Seal the contacts with a cover cap (see *Figure 5-25* and *Figure 5-26*).

Installation

✧ Pull the cover cap off the terminal.

✧ Carefully insert the terminal block into the spring clips.

✧ Both spring clips must engage clearly audibly.

6 Technical Data

6.1 Analog Inputs

Current Inputs

All current, voltage, and power data are specified as RMS values.			
Rated frequency f_{rated}	50 Hz, 60 Hz 16.7 Hz (for rail protection devices only)		
Protection-class current transformers	Rated current I_{rated}	Measuring range of the modular devices	Measuring range of the non-modular devices
	5 A 1 A	0 A to 500 A 0 A to 100 A	0 A to 250 A 0 A to 50 A
Instrument transformers	5 A 1 A	0 A to 8 A 0 A to 1.6 A	0 A to 8 A 0 A to 1.6 A
Power consumption per current circuit at rated current	Approx. 0.1 VA		
Thermal rating (protection and instrument transformers)	500 A for 1 s		
	150 A for 10 s		
	20 A continuously		
	25 A for 3 min		
	30 A for 2 min		
Dynamic load-carrying capacity	1250 A one half wave		

Voltage Input

All current, voltage, and power data are specified as RMS values.		
Rated frequency f_{rated}	50 Hz, 60 Hz 16.7 Hz (for rail-protection devices only)	
Input and output modules	IO202/IO208/IO211/IO214	IO215
Measuring range	0 V to 200 V	0 V to 7.07 V
Input impedance	< 0.1 VA	< 0.01 VA
Thermal rating	230 V continuously	20 V continuously

Measuring-Transducer Inputs (via Module ANAI-CA-4EL)

Insulation class	SELV (Safety Extra Low Voltage) (according to IEC 60255-27)
Connector type	8-pin multiple contact strip
Differential current input channels	4
Measuring range	DC -24 mA to +24 mA
Fault	< 0.5 % of the measuring range
Input impedance	140 Ω
Conversion principle	Delta-sigma (16 bit)
Permissible potential difference between channels	DC 20 V
Galvanic separation from ground/housing	DC 700 V
Permissible overload	DC 100 mA continuously
Measurement repetition	200 ms

Measuring-Transducer Inputs (via Module ARC-CD-3FO)

Connector type	AVAGO AFBR-4526Z
Number of transceivers	3

Fiber type	Polymer Optical Fiber (POF) 1 mm
Receiver	
Maximum	-10 dBm ± 2 dBm
Minimum	-40 dBm ± 2 dBm
Spectrum	400 nm to 1100 nm
Attenuation	In the case of plastic optical fibers, you can expect a path attenuation of 0.2 dB/m Additional attenuation comes from the plug and sensor head.
Optical budget [1]	Minimal 25 dB
Analog sampling rate	16 kHz
ADC type	10-bit successive approximation
Transmitter	
Type	LED
Wavelength	λ = 650 nm
Transmit power	Minimum 0 dBm Maximum 2 dBm
Numerical aperture	0.5 [2]
Signal rate connection test	1 pulse per second
Pulse duration connection test	11 µs
Comment: [1] All values in combination with sensors approved by Siemens. [2] Numerical aperture (NA = sin θ (launch angle))	

High-Speed Measuring-Transducer Inputs, Voltage/Current (via IO210, IO212)

NOTE

Current and voltage must not be connected to a measuring-transducer input at the same time; only either current or voltage may be connected. Due to EMC, no line may be connected to an input that is not used (current or voltage).

Use shielded cables.

Table 6-1 High-Speed Measuring-Transducer Inputs, Voltage

Differential voltage input channels	IO210: 4[2] IO212: 8[3]
Measuring range	DC -10 V to +10 V
Fault	< 0.5 % of the measuring range
Input impedance	48 kΩ
Conversion principle	Delta-sigma (16 bit)
Insulation test voltage between the channels	DC 3.5 kV
Insulation test voltage with respect to ground/housing	DC 3.5 kV
Max. permissible voltage with respect to ground on the measuring inputs	300 V
Permissible overload	DC 20 V continuously DC 60 V continuously (IO210 MT3 terminal point C9)

[2] The IO210 has 4 high-speed measuring-transducer inputs. They can be used either as a voltage or as a current input.
[3] The IO212 has 8 high-speed measuring-transducer inputs. They can be used either as a voltage or as a current input.

Measurement repetition	62.5 µs
Insulation class IO210	ELV (Extra Low Voltage) (according to IEC 60255-27)
Insulation class IO212	SELV (according to IEC 60255-27)

Table 6-2 High-Speed Measuring-Transducer Inputs, Current

Differential current input channels	IO210: 4[4] IO212: 8[5]
Measuring range	DC -20 mA to +20 mA
Fault	< 0.5 % of the measuring range
Input impedance, current	12 Ω
Conversion principle	Delta-sigma (16 bit)
Permissible potential difference between channels	DC 3.5 kV
Galvanic separation from ground/ housing	DC 3.5 kV
Permissible current overload	DC 100 mA continuously
Measurement repetition	62.5 µs

[4] The IO210 has 4 high-speed measuring-transducer inputs. They can be used either as a voltage or as a current input.
[5] The IO212 has 8 high-speed measuring-transducer inputs. They can be used either as a voltage or as a current input.

6.2 Supply Voltage

Integrated Power Supply			
For modular devices, the following printed circuit-board assemblies have a power supply: PS201 – Power supply of the base module and of the 1st device row PS203 – Voltage supply of 2nd device row CB202 – Plug in module assembly with integrated power supply, for example, to accommodate communication modules			
Permissible voltage ranges (PS201, PS203, CB202)	DC 19 V to DC 60 V	DC 48 V to DC 300 V AC 80 V to AC 265 V, 50 Hz/60 Hz	
Auxiliary rated voltage V_H (PS201, PS203, CB202)	DC 24 V/DC 48 V	DC 60 V/DC 110 V/DC 125 V/DC 220 V/ DC 250 V or AC 100 V/AC 115 V/AC 230 V, 50 Hz/60 Hz	
Permissible voltage ranges (PS101)	DC 19 V to DC 60 V	DC 48 V to 150 V	DC 88 V to DC 300 V AC 80 V to AC 265 V, 50 Hz/60 Hz
Auxiliary rated voltage V_H (PS101)	DC 24 V/DC 48 V	DC 60 V/DC 110 V/ DC 125 V	DC 110 V/ DC 125 V/ DC 220 V/DC 250 V or AC 100 V/AC 115 V/ AC 230 V, 50 Hz/60 Hz
Superimposed alternating voltage, peak-to-peak, IEC 60255-11		≤ 15% of the DC auxiliary rated voltage (applies only to direct voltage)	
Inrush current		≤ 18 A	
Recommended external protection		Miniature circuit breaker 6 A, characteristic C according to IEC 60898	
Internal fuse			
–	DC 24 V to DC 48 V	DC 60 V to DC 125 V	DC 24 V to DC 48 V AC 100 V to AC 230 V
PS101	4 A intert, AC 250 V, DC 150 V, UL recognized SIBA type 179200 or Schurter type SPT 5x20	2 A time-lag, AC 250 V, DC 300 V, UL recognized SIBA type 179200 or Schurter type SPT 5x20	
PS201, PS203, CB202	2 A time-lag, AC 250 V, DC 300 V, UL recognized SIBA type 179200 or Schurter type SPT 5x20		
Power consumption (life relay active)			
–	DC	AC 230 V/50 Hz	AC 115 V/50 Hz
1/3 base module, non-modular Without plug-in modules	7.0 W	16 VA	12.5 VA
1/3 base module, modular Without plug-in modules	13 W	33 VA	24 VA
1/6 expansion module	3 W	6 VA	6 VA
1/6 plug-in module assembly without plug-in modules (modules CB202)	3.5 W	14 VA	7 VA

Integrated Power Supply			
Plug-in module for base module or plug-in module assembly (for example, communication module)	< 5 W	< 6 VA	< 6 VA
Stored-energy time for auxiliary voltage outage or short circuit, modular devices		For V ≥ DC 24 V ≥ 50 ms For V ≥ DC 110 V ≥ 50 ms For V ≥ AC 115 V ≥ 50 ms	
Stored-energy time for auxiliary voltage outage or short circuit, non-modular devices		For V ≥ DC 24 V ≥ 20 ms For V ≥ DC 60 V/DC 110 V ≥ 50 ms For V ≥ AC 115 V ≥ 200 ms	

6.3 Binary Inputs

Rated voltage range	DC 24 V to 250 V The binary inputs of SIPROTEC 5 are bipolar with the exception of the binary inputs on the IO230 and on the IO231.	
Current consumption, excited	Approx. DC 0.6 mA to 1.8 mA (independent of the operating voltage)	
Power consumption, max.	0.6 VA	
Pickup time	Approx. 3 ms	
Dropout time	Approx. 4 ms	
Switching thresholds	Adjustable with DIGSI 5	
	Range 1 for 24 V, 48 V, and 60 V Operating voltage	$V_{low} \leq$ DC 10 V $V_{high} \geq$ DC 19 V
	Range 2 for 110 V and 125 V Operating voltage	$V_{low} \leq$ DC 44 V $V_{high} \geq$ DC 88 V
	Range 3 for 220 V and 250 V Operating voltage	$V_{low} \leq$ DC 88 V $V_{high} \geq$ DC 176 V
Maximum permitted voltage	DC 300 V	
The binary inputs contain interference suppression capacitors. In order to ensure EMC, use the terminals shown in the terminal diagrams/connection diagrams to connect the binary inputs to the common potential.		

6.4 Relay Outputs

Standard Relay (Type S)

Switching capacity	On: 1000 W/VA Off: 30 VA; 40 W ohmic; 30 W/VA at L/R ≤ 40 ms
AC and DC contact voltage	250 V
Permissible current per contact (continuous)	5 A
Permissible current per contact (switching on and holding)	30 A for 1 s (make contact)
Short-time current across closed contact	250 A for 30 ms
Total permissible current for contacts connected to common potential	5 A
Switching time OOT (**O**utput **O**perating **T**ime) Additional delay of the output medium used	≤ 10 ms, typically 8 ms
Max. rated data of the output contacts in accordance with UL certification	DC 24 V, 8 A, General Purpose DC 48 V, 0.8 A, General Purpose DC 240 V, 0.1 A, General Purpose AC 240 V, 5 A, General Purpose AC 120 V, 1/3 hp AC 250 V, 1/2 hp B300 R300
Interference suppression capacitors across the contacts	4.7 nF, ± 20 %, AC 250 V

Fast Relay (Type F)

Switching capacity	On: 1000 W/VA Off: 30 VA; 40 W ohmic; 30 W/VA at L/R ≤ 40 ms
AC and DC contact voltage	250 V
Permissible current per contact (continuous)	5 A
Permissible current per contact (switching on and holding)	30 A for 1 s (make contact)
Short-time current across closed contact	250 A for 30 ms
Total permissible current for contacts connected to common potential	5 A
Switching time OOT (**O**utput **O**perating **T**ime) Additional delay of the output medium used	Closing time, typical: 4 ms Opening time, typical: 2 ms ≤ 5 ms
Rated data of the output contacts in accordance with UL certification	AC 120 V, 8.5 A, General Purpose AC 277 V, 6 A, General Purpose AC 277 V, 0.7 hp AC 347 V, 4.5 A, General Purpose B300 R300
Interference suppression capacitors across the contacts	4.7 nF, ± 20 %, AC 250 V

Supervision	2-channel activation with cyclic testing (only for make contact)

High-Speed Relay with Semiconductor Acceleration (Type HS)

Switching capacity	On/Off: 1000 W/VA
Contact voltage	AC 200 V, DC 250 V
Permissible current per contact (continuous)	5 A
Permissible current per contact (switching on and holding)	30 A for 1 s (make contact)
Short-time current across closed contact	250 A for 30 ms
Total permissible current for contacts connected to common potential	5 A
Switching time OOT (**O**utput **O**perating **T**ime) Additional delay of the output medium used	Closing time, typical: 0.2 ms Opening time, typical: 6 ms Maximum: ≤ 9 ms
Rated data of the output contacts in accordance with UL certification	B150 Q300

Power Relay (for Direct Control of Motor Switches)

Switching capacity for permanent and periodic operation		
250 V/4.0 A 220 V/4.5 A 110 V/5.0 A 60 V/5.0 A 48 V/5.0 A 24 V/5.0 A	1000 W 1000 W 550 W 300 W 240 W 120 W	In order to prevent any damage, the external protection circuit must switch off the motor in case the rotor is blocked.
Turn on switching power for 30 s, recovery time until switching on again is 15 minutes. For short-term switching operations, an impulse/pause ratio of 3 % must be considered.		
100 V/9.0 A 60 V/10.0 A 48 V/10.0 A 24 V/10.0 A	1000 W 600 W 480 W 240 W	Continuous and inching operation is not permitted. In order to prevent any damage, the external protection circuit must switch off the motor in case the rotor is blocked.
AC and DC contact voltage		250 V
Permissible continuous current per contact		5 A
Permissible current per contact (switching on and holding)		30 A for 1 s
Short-time current across closed contact		250 A for 30 ms
Total permissible current for contacts connected to common potential		5 A
Switching time OOT (**O**utput **O**perating **T**ime) Additional delay of the output medium used		≤ 16 ms
Rated data of the output contacts in accordance with UL certification		DC 300 V, 10 A, Resistive DC 250 V, 1 hp motor - 30 s ON, 15 min OFF DC 110 V, 3/4 hp motor - 30 s ON, 15 min OFF DC 60 V, 1/2 hp motor - 30 s ON, 15 min OFF DC 48 V, 1/3 hp motor - 30 s ON, 15 min OFF DC 24 V, 1/6 hp motor - 30 s ON, 15 min OFF
Interference suppression capacitors across the contacts		4.7 nF, ± 20 %, AC 250 V

The power relays operate in interlocked mode, that is, only one relay of each switching pair picks up at a time thereby avoiding a power-supply short circuit.

6.5 Light-Emitting Diodes in the On-Site Operation Panel

Base Module

Status	Color	Quantity
RUN	Green	1
ERROR	Red	1
Routable (adjustable with DIGSI 5) Only the defined color can be used in operation.	2-colored: red or green	16

Expansion Module

Status	Color	Quantity
Routable	Red	16 optional

6.6 Communication Interfaces

User Interface, Front Side

You can find a USB connection of type B for the connection to a laptop computer or to a PC on the front side of the device. A protection cover protects this USB connection against pollution and humidity.

USB	User interface
Connection	USB type B 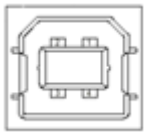
Insulation class	PELV (Protective Extra Low Voltage) (according to IEC 60255-27)

Time-Synchronization Interface (Port G)

The terminal for time synchronization is located on the D-sub 9 interface (position G). Time synchronization signals for DC 5 V, DC 12 V, and DC 24 V can be processed as an option.

Time Synchronization	External synchronization sources, for example, DCF77 IRIG B signal Internal RTC (real time)
Connection	Rear D-sub 9 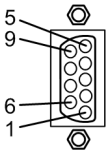
Rated signal voltages	DC 5 V, DC 12 V, or DC 24 V (optional)
Test voltage	AC 500 V at 50 Hz
Insulation class	SELV (according to IEC 60255-27)

Table 6-3 Time-Synchronization Connection

Pin	Signal	Signal Description
1	P24-TSIG	DC 24 V input
2	P5-TSIG	DC 5 V input
3	M-TSIG	Return line Pxx-TSIG
4	M-TSYNC [6]	Return line for P-TSYNC
5	Screen	Shield potential
6	–	–
7	P12-TSIG	DC 12 V input
8	P-TSYNC	DC 24 V input
9	Screen	Shield potential

[6] Only for the PPS signal (GPS)

Signal Levels/ Burdens	Signal Rated Input Voltage, DC		
	5 V	**12 V**	**24 V**
V_{IHigh}	6.0 V	15.8 V	31.0 V
V_{ILow}	1.0 V at I_{ILow} = 0.25 mA	1.4 V at I_{ILow} = 0.25 mA	1.9 V at I_{ILow} = 0.25 mA
I_{IHigh}	4.5 mA to 9.4 mA	4.5 mA to 9.3 mA	4.5 mA to 8.7 mA
R_I	890 Ω at V_I = 4 V	1930 Ω at V_I = 8.7 V	3780 Ω at V_I = 17 V
	640 Ω at V_I = 6 V	1700 Ω at V_I = 15.8 V	3560 Ω at V_I = 31 V

On-Site Operation Panel for Surface-Mounting Housing (Port H) (Available only for Modular Devices)

The terminal for the on-site operation panel of surface-mounted devices is located on the D-sub 15 interface (position H). The on-site operation panel of surface-mounted devices with integrated or detached on-site operation panel is connected to this interface.

User interface	Detached on-site operation panel
Connection	On the rear side D-sub 15 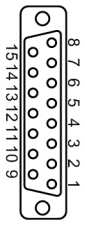
Insulation class	PELV (according to IEC 60255-27)

Integrated Ethernet Interface (Port J)

This terminal is used to load the device with DIGSI 5 using Ethernet. This terminal also enables IEC 61850 Ethernet communication or communication with another protocol via Ethernet, for example, for connecting an external RTD unit.

Ethernet	Integrated Ethernet interface
Connection	RJ45 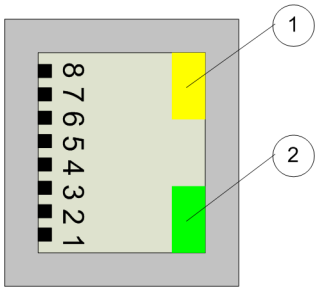 (1) LED 1: Yellow (2) LED 2: Green
Insulation class	SELV (according to IEC 60255-27)

Table 6-4 Connection

Pin	Signal	Signal Description
1	ETH_TX_P	Transmit Data +
2	ETH_TX_N	Transmit Data -
3	ETH_RX_P	Receive Data +
4	–	–
5	–	–
6	ETH_RX_N	Receive Data -
7	–	–
8	–	–
	Screen	Shield potential

LEDs of the RJ45 Terminals – Integrated Ethernet Interface (Port J)

The light-emitting diodes (LEDs) signal the operating state of the communication link. The operating states are explained in the following table:

Integrated Ethernet Interface (RJ45)	Signal	Color	Operating Status
LED 1	ETH_LED1_N	Yellow	Continuously lit: 100 Mbits Not lit: 10 Mbits
LED 2	ETH_LED0_N	Green	Flashing: Telegram reception Continuously lit: No communication

Ethernet COM Link (Port K) (Available only for Modular Devices)

The Ethernet connection to the CB202 PCB assembly (plug-in module assembly with integrated power supply) is realized using the RJ45 interface.

The RJ45 interface can be used exclusively for the connection of the CB202 module. This terminal is left unused when no CB202 module is in use.

The light-emitting diodes (LEDs) signal the operating state of the communication connection. The operating states are explained in the following table:

COM Link (RJ45)	Signal	Color	Operating State
LED 1	CL2_LED0_N	Yellow	Flashes when a communication module is inserted in plug-in module position P.
LED 2	CL3_LED0_N	Green	Flashes when a communication module is inserted in plug-in module position N.

Table 6-5 Connection

Pin	Signal	Signal Description
	Siemens-specific assignment	Connection using a special cable. Is part of the device delivery.

Insulation class	SELV (according to IEC 60255-27)

Plug-In Modules

You can find the Technical data for plug-in modules in chapter *4 Plug-In Modules*.

6.7 Electrical Tests

Standards

IEC 60255 (product standard)
IEEE Std C37.90
UL 508
Additional standards are listed for the individual tests.

Installation Requirements

Overvoltage category	III
Degree of pollution	2
Protection class	1

Voltage-Immunity and Safety Tests

Standards	IEC 60255-27
Voltage test (routine test), current measurement inputs, voltage measurement inputs, relay outputs	AC 2.5 kV 50 Hz
Voltage test (routine test), Auxiliary voltage, binary inputs	DC 3.5 kV
Voltage test (routine test), only isolated communication and time-synchronization interfaces and analog inputs (module position E, F, M, N, and P)	DC 700 V
Surge immunity test (type testing), all circuits except communication and time-synchronization interfaces and analog inputs, class III	5 kV (peak value) 1.2 µs/50 µs 0.5 J 3 positive and 3 negative impulses at intervals of 1 s
Insulation resistance	> 100 MΩ @ DC 500 V
Resistor of protective-equipotential-bonding	< 0.1 Ω @ DC 12 V, 30 A after 1 min.

EMC Immunity Tests (Type Tests, Test under Mounting Conditions)

Standards	IEC 60255-1 and -26 (product standards) EN 61000-6-2 (generic standard)
Electrostatic discharge test IEC 61000-4-2	Contact discharge: • Front-side modular and non-modular devices 8 kV • Back-side modular devices 8 kV • Back-side non-modular devices 6 kV Air discharge 15 kV Both polarities 150 pF Ri = 330 Ω
Radiated electromagnetic field immunity Frequency sweep IEC 61000-4-3	20 V/m, 80 MHz to 1 GHz 10 V/m, 1 GHz to 2.7 GHz 80 % AM 1 kHz

Radiated electromagnetic field immunity Spot frequencies IEC 61000-4-3	20 V/m, 80 MHz/160 MHz/380 MHz/450 MHz/900 MHz 10 V/1.85 GHz/2.15 GHz 80 % AM 1 kHz Dwell time ≥ 10 s	
Electrical fast transient/ burst immunity IEC 61000-4-4	4 kV 5 ns/50 ns 5 kHz Burst length 15 ms Repetition rate 300 ms Both polarities Ri = 50 Ω Test duration ≥ 5 min	
High-energy surge voltages IEC 61000-4-5	Pulse: 1.2 µs/50 µs	
	Auxiliary voltage	Common mode: 4 kV, 12 Ω, 9 µF Differential mode: 1 kV, 2 Ω, 18 µF
	Measuring inputs, binary inputs, and relay outputs	Common mode: 4 kV, 42 Ω, 0.5 µF Differential mode: 2 kV, 42 Ω, 0.5 µF or varistor
Conducted RF, amplitude-modulated IEC 61000-4-6		10 V, 150 kHz to 80 MHz, 80 % AM, 1 kHz
Conducted RF, amplitude-modulated IEC 61000-4-6 Spot frequencies		27 MHz/68 MHz at 10 V, dwell time ≥ 10 s 80 % AM, 1 kHz
Power frequency magnetic field immunity test IEC 61000-4-8	100 A/m (continuous) 1000 A/m for 3 s	
Pulsed magnetic field IEC 61000-4-9	1500 A/m, 6.4 µs/16 µs	
Standard for Surge Withstand Capability (SWC) IEEE Std C37.90.1	2.5 kV (peak value) 1 MHz τ = 15 µs 400 impulses per s Test duration ≥ 10 s Ri = 200 Ω Common mode and differential mode test	
Standard for Fast Transient Surge Withstand Capability IEEE Std C37.90.1	4 kV 5 ns/50 ns 5 kHz Burst length 15 ms Repetition rate 300 ms Both polarities Ri = 50 Ω Test duration 60 s Common mode and differential mode test	

Standard for Withstand Capability or Relay Systems to Radiated Electromagnetic Interference from Transceivers (Keying test) IEEE Std C37.90.2	20 V/m 80 MHz to 1 GHz Pulse modulation
Damped oscillatory wave immunity test IEC 61000-4-18	100 kHz, 1 MHz, 2.5 kV (peak value) 3 MHz, 10 MHz, 30 MHz, 2 kV (peak value) Test duration ≥ 60 s
Power-frequency disturbance test IEC 61000-4-16	Zone A 150 V (differential mode) 300 V (common mode)

EMC Electromagnetic Emission Tests (Type Tests, Test under Mounting Conditions)

Standards		IEC 60255-26 (product standard) IEC 61000-6-4 (generic standard)
Conducted emission on auxiliary-voltage lines CISPR 22		150 kHz to 30 MHz limit class A
Radiated emission	CISPR 11	30 MHz to 1 000 MHz limit class A
	CISPR 22	1 GHz to 6 GHz limit class A
Loading effect in electricity-supply systems, harmonics Harmonic current emissions		Does not apply! (see EN 61000-3-2, section 7, power consumption < 75 W)
Loading effect in electricity-supply systems, voltage fluctuations Flicker		Does not apply! (see EN 61000-3-3, section 6, no significant voltage fluctuations)

6.8 Mechanical Tests

Vibration and Shock Stress in Stationary Use

Standards	IEC 60255-21 and IEC 60068
Vibration Test (sinusoidal) IEC 60255-21-1, class 2 [1] and IEC 60068-2-6	Sinusoidal 10 Hz to 60 Hz: ± 0.075 mm amplitude 60 Hz to 150 Hz; 10 m/s^2 acceleration Frequency sweep 1 octave/min 20 cycles in 3 axes perpendicular to one another
Shock Test IEC 60255-21-2, class 1	Semi-sinusoidal Acceleration 50 m/s^2 Duration 11 ms 3 shocks each in both directions of the 3 axes
Seismic Tests IEC 60255-21-3, class 2 and IEC 60068-3-3	Sinusoidal 3 Hz [2] to 35 Hz: Frequency sweep 1 octave/min 1 cycle in 3 axes perpendicular to one another 3 Hz to 8 Hz: ± 7.5 mm amplitude (horizontal axes) 3 Hz to 8 Hz: ± 3.5 mm amplitude (vertical axis) 8 Hz to 35 Hz: 20 m/s^2 acceleration (horizontal axes) 8 Hz to 35 Hz: 10 m/s^2 acceleration (vertical axis)
Comment: [1] The non-modular devices in the assembly frame meet class 1. [2] For technical reasons, the frequency range is raised from 1 Hz to 3 Hz at the lower limit.	

Vibration and Shock Stress During Transport

Standards	IEC 60255-21 and IEC 60068
Vibration Test (sinusoidal) IEC 60255-21-1, class 2 [1] and IEC 60068-2-6	Sinusoidal 5 Hz to 8 Hz: ± 7.5 mm amplitude 8 Hz to 150 Hz: 20 m/s^2 acceleration Frequency sweep 1 octave/min 20 cycles in 3 axes perpendicular to one another
Shock Test IEC 60255-21-2, class 1 and IEC 60068-2-27	Semi-sinusoidal Acceleration 150 m/s^2 Duration 11 ms 3 shocks each in both directions of the 3 axes
Continuous shock IEC 60255-21-2, class 1 and IEC 60068-2-27	Semi-sinusoidal Acceleration 100 m/s^2 Duration 16 ms 1000 shocks each in both directions of the 3 axes
Comment: [1] The non-modular devices in the assembly frame meet class 1.	

6.9 Environmental Conditions

Temperatures

Type test, in operation (in compliance with IEC 60068-2-1 and IEC 60068-2-2, test Ad for 16 h and test Bd for 16 h)	-25 °C to +85 °C
Temporarily permissible during operation (tested for 96 h)	-20 °C to +70 °C Load conditions for the non-modular devices: With surrounding temperatures above 55 °C, no more than 50 % of the binary inputs and relay outputs per assembly are allowed to be continuously active. Readability of the display may be impaired below -10 °C and above +55 °C.
Recommended for uninterrupted duty (in compliance with IEC 60255-1)	-10 °C to +55 °C
Temperatures for continuous storage	-25 °C to +55 °C
Type test, transport and storage for 96 h	-40 °C to +70 °C

Heat-related limitations for the binary inputs on the IO230 input module (modular devices)			
Switching thresholds	Up to 40 °C	Up to 55 °C	Up to 70 °C
Range 1 for 24 V, 48 V, and 60 V operating voltage	All 48 binary inputs usable for uninterrupted duty	All 48 binary inputs usable for uninterrupted duty	All 48 binary inputs usable for uninterrupted duty
Range 2 for 110 V and 125 V operating voltage	All 48 binary inputs usable for uninterrupted duty	All 48 binary inputs usable for uninterrupted duty	36 binary inputs usable for uninterrupted duty (max. 3 in each group of 4 at the same time)
Range 3 for 220 V and 250 V operating voltage	36 binary inputs usable for uninterrupted duty (max. 3 in each group of 4 at the same time)	24 binary inputs usable for uninterrupted duty (max. 2 in each group of 4 at the same time)	12 binary inputs usable for uninterrupted duty (max. 1 in each group of 4 at the same time)

NOTE

At an ambient temperature of 55 °C to 70 °C, a maximum of 36 relays per row may be switched on simultaneously.

Heat-related limitations for the binary inputs on the IO231 input module (modular devices)			
Switching thresholds	Up to 40 °C	Up to 55 °C	Up to 70 °C
Range 1 for 24 V, 48 V, and 60 V operating voltage	All 24 binary inputs usable for uninterrupted duty	All 24 binary inputs usable for uninterrupted duty	All 24 binary inputs usable for uninterrupted duty
Range 2 for 110 V and 125 V operating voltage	All 24 binary inputs usable for uninterrupted duty	All 24 binary inputs usable for uninterrupted duty	18 binary inputs usable for uninterrupted duty (max. 3 in each group of 4 at the same time)
Range 3 for 220 V and 250 V operating voltage	18 binary inputs usable for uninterrupted duty (max. 3 in each group of 4 at the same time)	12 binary inputs usable for uninterrupted duty (max. 2 in each group of 4 at the same time)	6 binary inputs usable for uninterrupted duty (max. 1 in each group of 4 at the same time)

Humidity

Permissible humidity stress (according to IEC 60068-2-30)	≤ 75 % relative humidity on the annual average Up to 93 % relative humidity on 56 days a year
	Devices subjected to condensation are not to be operated! Arrange the devices so that they are not exposed to direct sunlight or extreme temperature changes. This will prevent condensation in the device.
Constant humid heat, 56 days	40 °C, 93 % relative humidity
Humid heat, cyclical	12 h + 12 h cycles 25 °C/55 °C/95 % relative humidity

Other Environmental Information

Maximum altitude above sea level	2000 m (6561.68 ft)
Minimum admissible atmospheric pressure	783.8 hPa

6.10 Operating Conditions

The protection device is designed for flush mounting in conventional relay rooms and systems such that electromagnetic compatibility (EMC) is ensured with proper flush mounting.

Siemens additionally recommends:

- Use contactors and relays that work within the same cabinet or the same relay panel with digital protection equipment, only with suitable quenching equipment.
- With switchgear rated at 100 kV or higher, provide external connecting lines with shielding grounded at both ends that is capable of carrying current. No special measures are necessary in medium-voltage systems.
- Removing or plugging in individual modules under live voltage is prohibited. Some components are electrostatically sensitive in the removed state. Pay attention to the ESD specifications (**E**lectrostatically **S**ensitive **D**evices). There is no danger for the components when they are installed.

6.11 Reference Conditions and Influencing Variables

Reference Conditions

Measurand current I	I_{rated} ± 1 %
Measurand voltage V	V_{rated} ± 1 %
Frequency f	f_{rated} ± 1 %
Sine waveform, total harmonic distortion	≤ 5 %
Ambient temperature T_a	23 °C ± 1 °C/73.4 °F ± 2 °F
Auxiliary voltage V_a	$V_{auxrated}$ ± 1 %
Warmup time	≥ 15 min
External fields/external influences	None

Variables Influencing Pickup and Dropout Thresholds (Protection)

Auxiliary voltage: 0.8 V_{ar} to 1.2 V_{ar}	≤ 0.2 %
Ambient temperature: -10 °C to 55 °C	≤ 0.5 %/10 K
Frequency: 45 Hz to 65 Hz	≤ 1 %
Harmonics • Up to 10 % of 3rd harmonics • Up to 10 % of 5th harmonics	 ≤ 1 % ≤ 1 %
Warmup	≤ 0.3 %
Transient excess pickup in fundamental component measurement method for τ > 100 ms (with complete unbalance)	≤ 5 %
EMC interference	≤ 5 %

Variables Influencing the Measured Values (Fault Recorders)

Auxiliary voltage: 0.8 V_{ar} to 1.2 V_{ar}	≤ 0.2 %
Ambient temperature: -10 °C to 55 °C	≤ 0.5 %/10 K
Frequency: 45 Hz to 65 Hz	≤ 1 %
Harmonics • Up to 10 % of 3rd harmonics • Up to 10 % of 5th harmonics	 ≤ 1 % ≤ 1 %
Warmup	≤ 0.3 %
Transient excess pickup in fundamental component measurement method for τ > 100 ms (with complete unbalance)	≤ 5 %
EMC interference [7]	≤ 1.5 %

[7] Use shielded cables for the current and voltage measuring inputs on the fault recorder.

6.12 Approvals

UL-Listed/UL-Approved

Base module and 1/3 base module	IND. CONT. EQ. 69CA
Expansion module	IND. CONT. EQ. 69CA

6.13 Design Data

Masses

	Device Size Weight of the Modular Devices				
Type of construction	1/3	1/2	2/3	5/6	1/1
Flush-mounting device	4.8 kg	8.1 kg	11.4 kg	14.7 kg	18.0 kg
Surface-mounted device with integrated on-site operation panel	7.8 kg	12.6 kg	17.4 kg	22.2 kg	27.0 kg
Surface-mounted device with detached on-site operation panel	5.1 kg	8.7 kg	12.3 kg	15.9 kg	19.5 kg

	Size	Weight
Detached on-site operation panel	1/3	1.9 kg
Detached on-site operation panel	1/6	1.1 kg

	Device Size Weight of the Non-Modular Devices 7xx82
Type of construction	1/3
Flush-mounting device	3.7 kg
Bracket for non-modular surface-mounting variant	1.9 kg

Dimensions of the Basic and 1/3 Modules

Type of Construction (Maximum Dimensions)	Width over all x Height over all x Depth [8](in Inches)
Flush-mounting device	150 mm x 268 mm x 229 mm (5.91 x 10.55 x 9.02)
Surface-mounted device with integrated on-site operation panel	150 mm x 314 mm x 337 mm (5.91 x 12.36 x 13.27)
Surface-mounted device with detached on-site operation panel	150 mm x 314 mm x 230 mm (5.91 x 12.36 x 9.06)

Dimensions of Device Rows

Type of Construction (Maximum Dimensions)	Width over all x Height over all x Depth [9](in Inches)				
Type of construction	1/3	1/2	2/3	5/6	1/1
Flush-mounting device	150 mm x 268 mm x 229 mm (5.91 x 10.55 x 9.02)	225 mm x 268 mm x 229 mm (8.86 x 10.55 x 9.02)	300 mm x 268 mm x 229 mm(11.81 x 10.55 x 9.02)	375 mm x 268 mm x 229 mm (14.76 x 10.55 x 9.02)	450 mm x 268 mm x 229 mm (17.72 x 10.55 x 9.02)
Surface-mounted device with integrated on-site operation panel	150 mm x 314 mm x 337 mm (5.91 x 12.36 x 13.27)	225 mm x 314 mm x 337 mm (8.86 x 12.36 x 13.27)	300 mm x 314 mm x 337 mm (11.81 x 12.36 x 13.27)	375 mm x 314 mm x 337 mm (14.76 x 12.36 x 13.27)	450 mm x 314 mm x 337 mm (17.72 x 12.36 x 13.27)

[8] Width and depth rounded to whole numbers in mm
[9] Width and depth rounded to whole numbers in mm

Type of Construction (Maximum Dimensions)	Width over all x Height over all x Depth [9](in Inches)				
Surface-mounted device with detached on-site operation panel	150 mm x 314 mm x 230 mm (5.91 x 12.36 x 9.06)	225 mm x 314 mm x 230 mm (8.86 x 12.36 x 9.06)	300 mm x 314 mm x 230 mm (11.81 x 12.36 x 9.06)	375 mm x 314 mm x 230 mm (14.76 x 12.36 x 9.06)	450 mm x 314 mm x 230 mm (17.72 x 12.36 x 9.06)

Expansion Module Dimensions

Type of Construction (Maximum Dimensions)	Width x Height x Depth [10] (in Inches)
Flush-mounting device	75 mm x 268 mm x 229 mm (2.95 x 10.55 x 9.02)
Surface-mounted device with integrated on-site operation panel	75 mm x 314 mm x 337 mm (2.95 x 12.36 x 13.27)
Surface-mounted device with detached on-site operation panel	75 mm x 314 mm x 230 mm (2.95 x 12.36 x 9.06)

Plug-In Module Dimensions

Type of Construction (Maximum Dimensions)	Width x Height x Depth (in Inches)
USART-Ax-xEL, ETH-Bx-xEL	61 mm x 45 mm x 120.5 mm (2.4 x 1.77 x 4.74)
USART-Ax-xFO, ETH-Bx-xFO (without protection cover)	61 mm x 45 mm x 132.5 mm (2.4 x 1.77 x 5.22)
ANAI-CA-4EL	61 mm x 45 mm x 119.5 mm (2.4 x 1.77 x 4.7)
ARC-CD-3FO	61 mm x 45 mm x 120.5 mm (2.4 x 1.77 x 4.74)

Minimum Bending Radii of the Connecting Cables Between the On-Site Operation Panel and the Base Module

Fiber-optic cable	R = 50 mm Pay attention to the length of the cable protection sleeve, which you must also include in calculations.
D-Sub cable	R = 50 mm (minimum bending radius)

Degree of Protection According to IEC 60529

For equipment in the surface-mounting housing	Front IP54
For equipment in the flush-mounting housing	Front IP54
For operator protection (back side)	IP2x for current terminal (installed) IP2x for voltage terminal (installed)
Degree of pollution, IEC 60255-27	2
Maximum altitude above sea level	2000 m (6561.68 ft)

UL Note

Type 1 if mounted into a door or front cover of an enclosure. When expanding the device with the 2nd device row, then they must be mounted completely inside an enclosure.

[9] Width and depth rounded to whole numbers in mm
[10] Width and depth rounded to whole numbers in mm

Tightening Torques for Terminal Screws

Type of Line	Current Terminal (also see *Figure 5-22*)	Voltage Terminal with Spring-Loaded Terminals (also see *Figure 5-22*)	Voltage Terminal with Screw Connection (also see *Figure 5-23*)
Stranded wires with ring-type lug	2.7 Nm	No ring-type lug	No ring-type lug
Stranded wires with boot-lace ferrules or pin-type lugs	2.7 Nm	1.0 Nm	0.6 Nm
Solid conductor, bare (2 mm^2)	2.0 Nm	1.0 Nm	–

NOTE

Use copper cables only.

Torques for Other Screw Types

Screw Type	Torque
M4 x 20	1.2 Nm
M4 x 8	1.2 Nm
M2.5 x 6	0.39 Nm
Countersunk screw, M2.5 x 6	0.39 Nm
Countersunk screw, M2.5 x 8	0.39 Nm
Collar screw, M4 x 20	0.7 Nm

6.14 Assembly Dimensions

Flush-Mounting Device

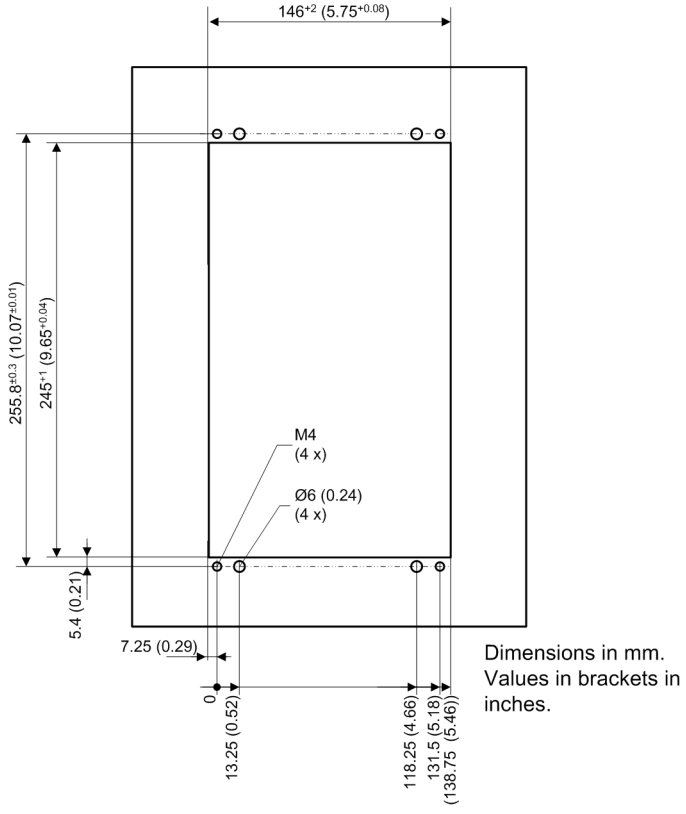

[dw_z1_1-3, 2, en_US]

Figure 6-1 Cut-Out Widths and Drilling Pattern - 1/3 Device, 1st Device Row

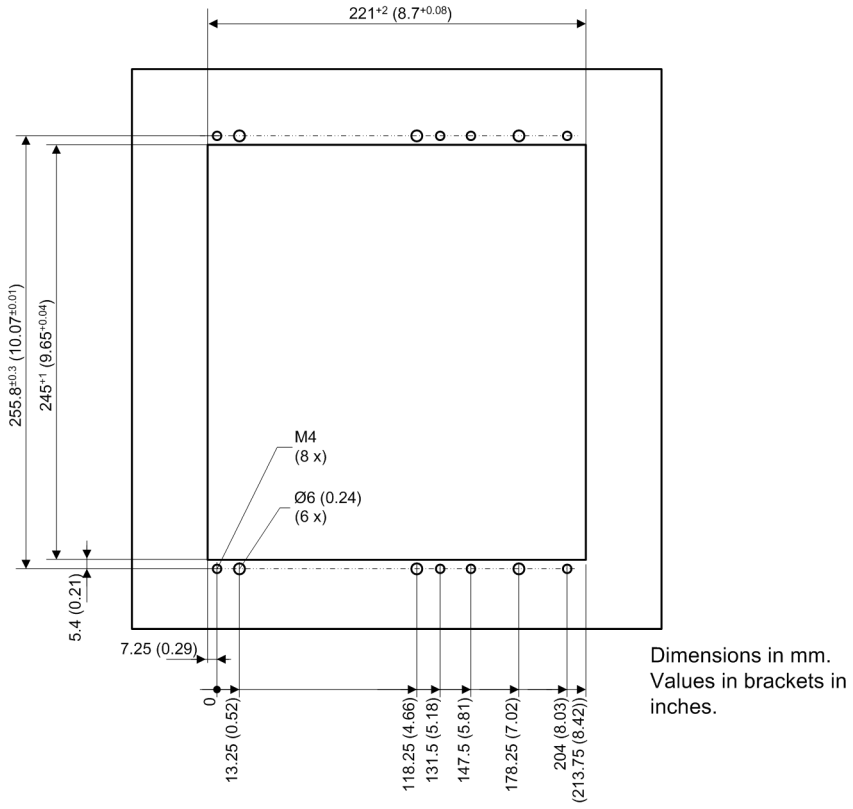

[dw_z1_1-2, 2, en_US]

Figure 6-2 Cut-Out Widths and Drilling Pattern - 1/2 Device, 1st Device Row

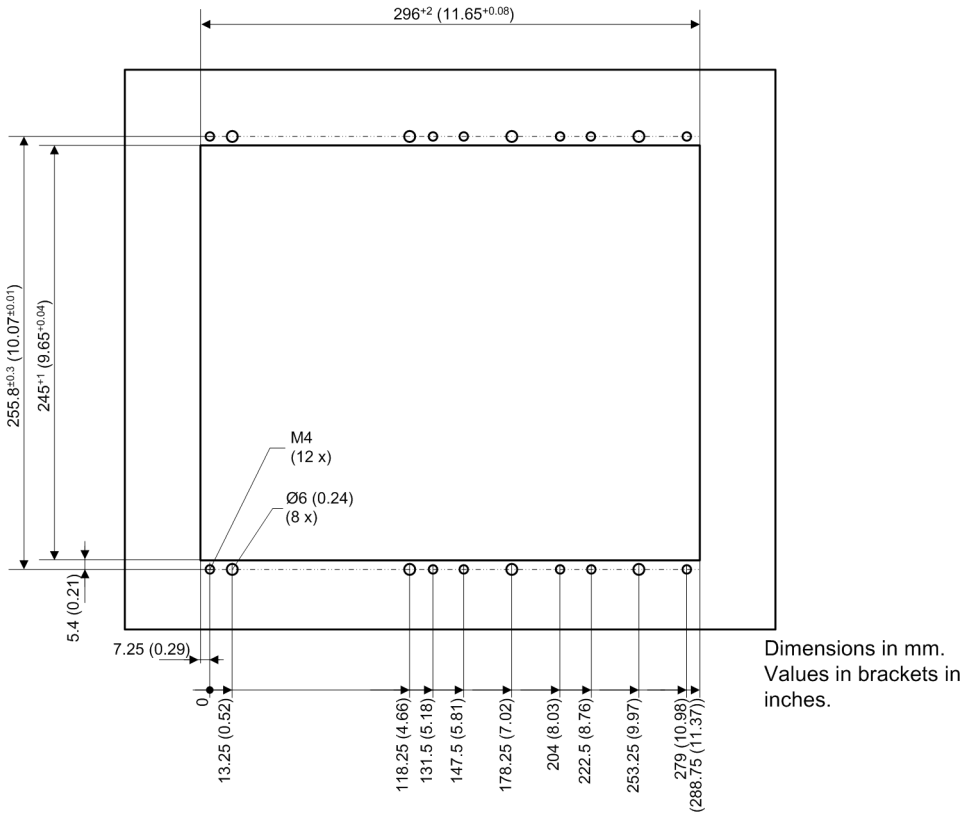

[dw_z1_2-3, 2, en_US]

Figure 6-3 Cut-Out Widths and Drilling Pattern - 2/3 Device, 1st Device Row

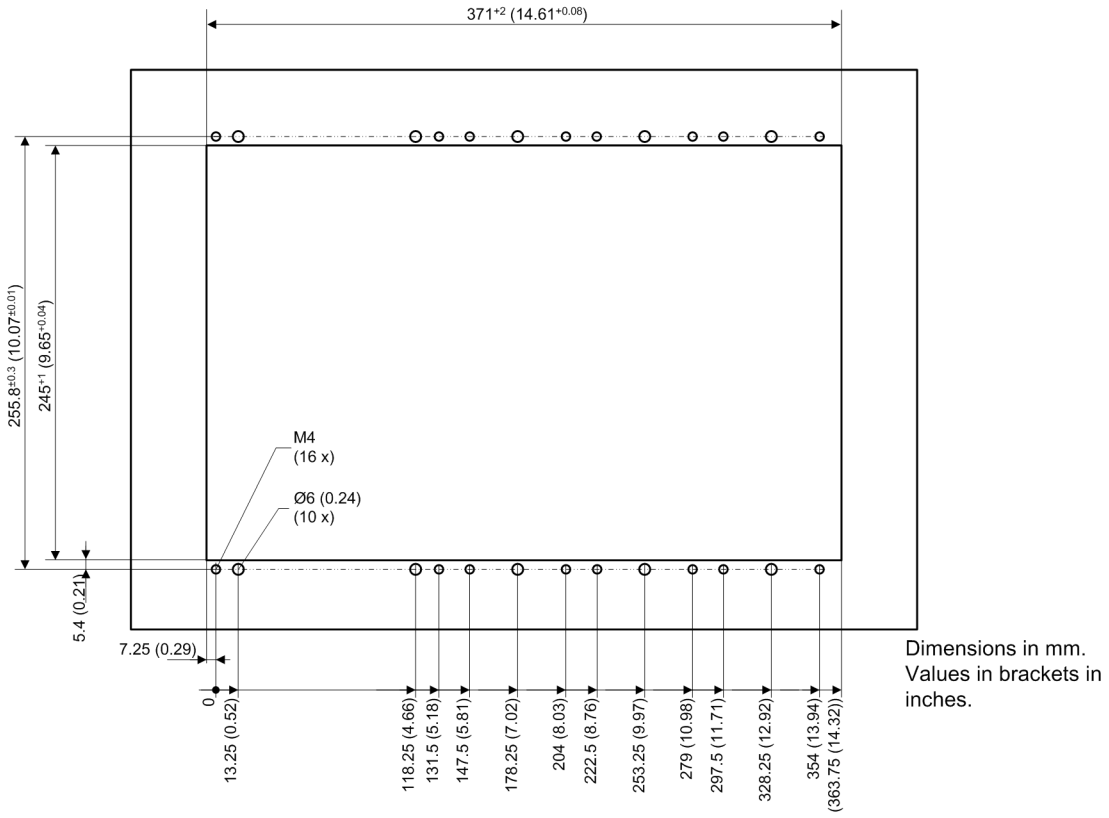

[dw_z1_5-6, 2, en_US]

Figure 6-4 Cut-Out Widths and Drilling Pattern - 5/6 Device, 1st Device Row

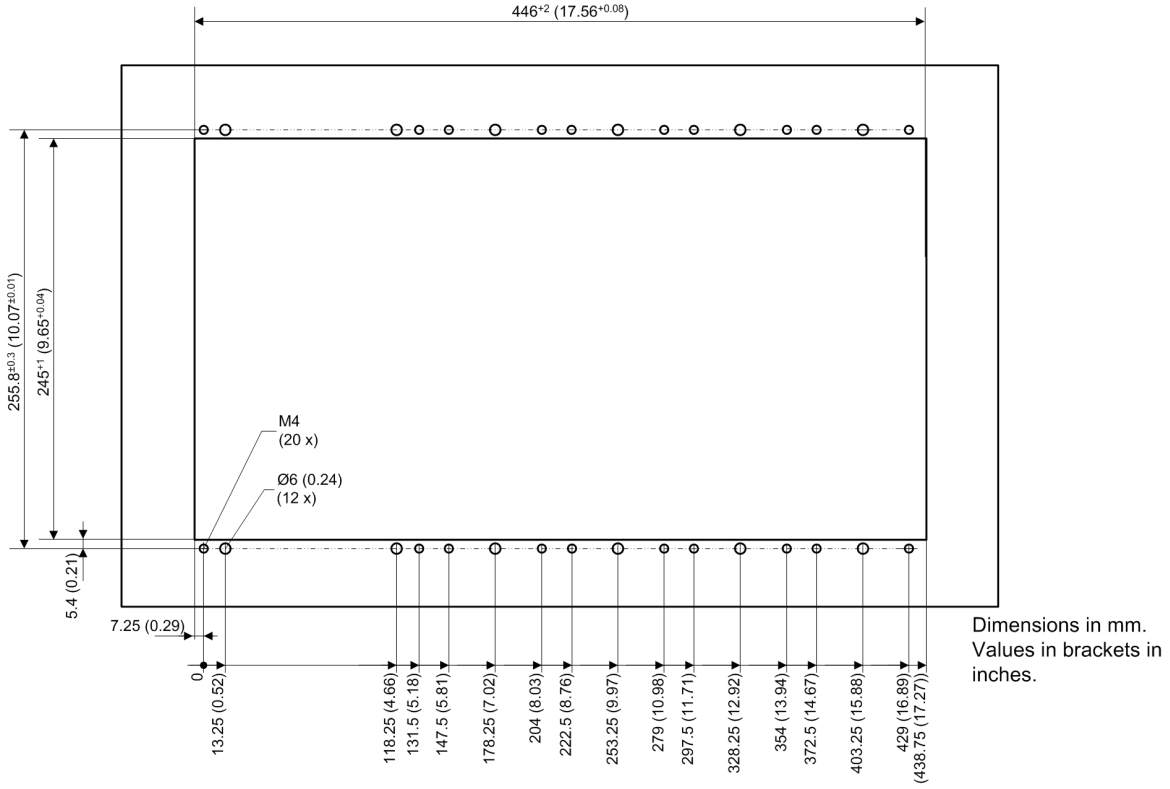

[dw_z1_1-1, 2, en_US]

Figure 6-5 Cut-Out Widths and Drilling Pattern - 1/1 Device, 1st Device Row

All drillings in the area of the specific device cut-out widths (see *Table 6-6*) must comply with the dimensions in the corresponding figures.

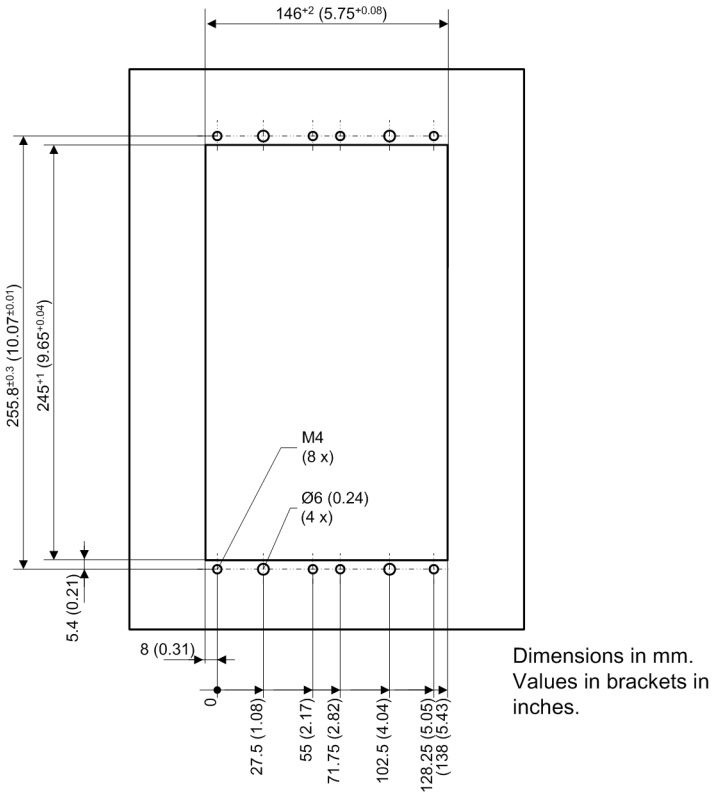

[dw_z2_2-6, 2, en_US]

Figure 6-6 Cut-Out Widths and Drilling Pattern - 1/3 Device, 2nd Device Row

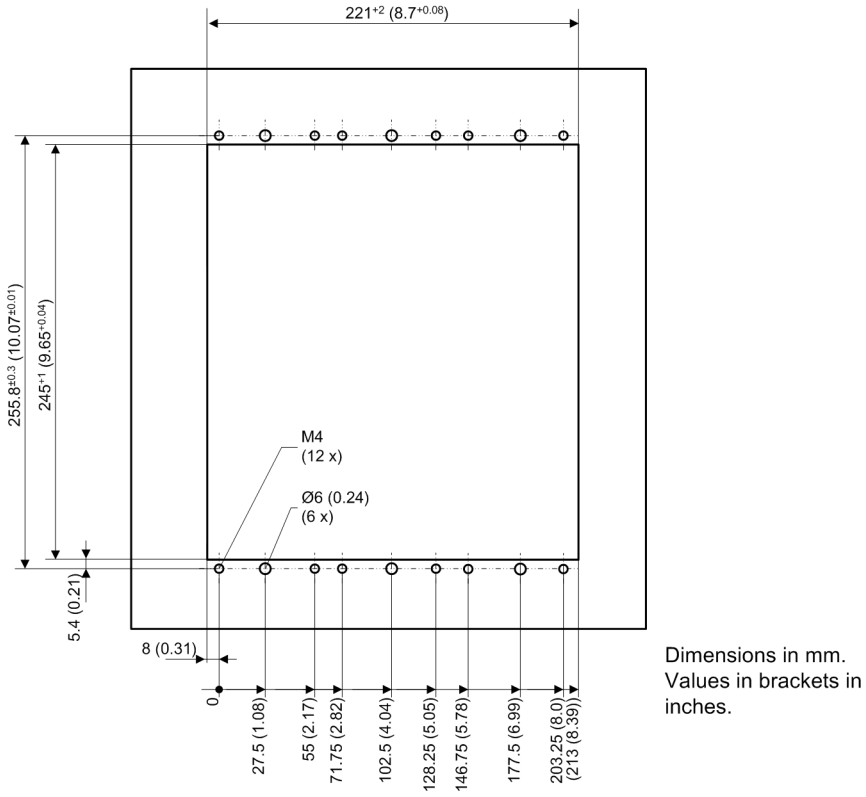

[dw_z2_3-6, 2, en_US]

Figure 6-7 Cut-Out Widths and Drilling Pattern - 1/2 Device, 2nd Device Row

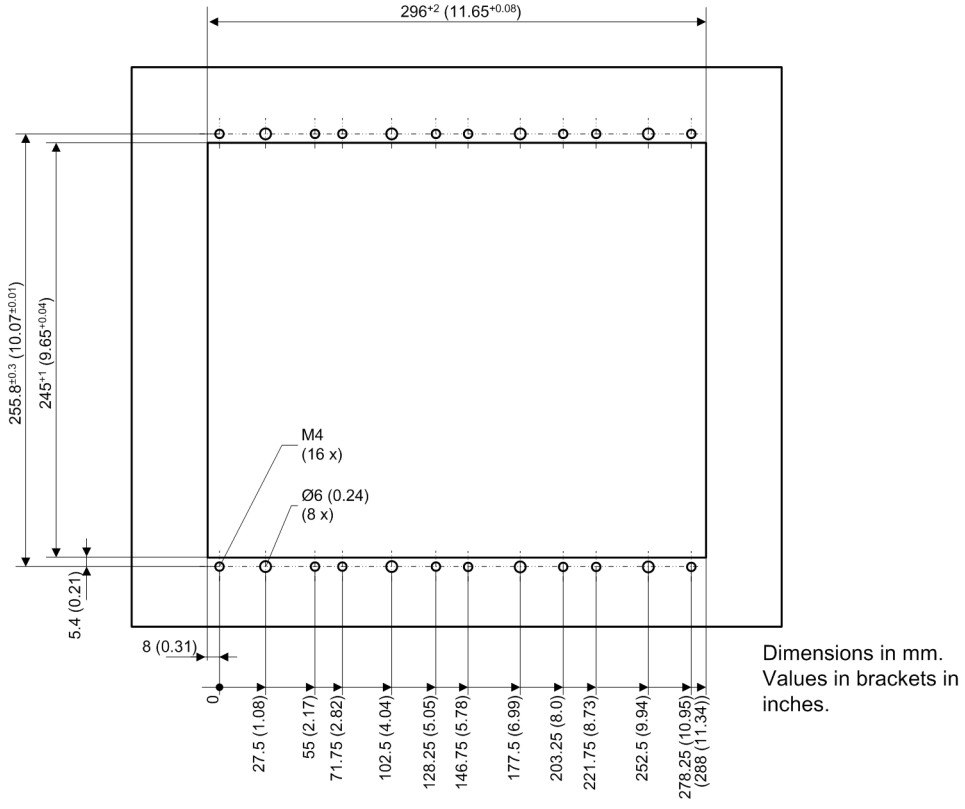

[dw_z2_4-6, 2, en_US]

Figure 6-8 Cut-Out Widths and Drilling Pattern - 2/3 Device, 2nd Device Row

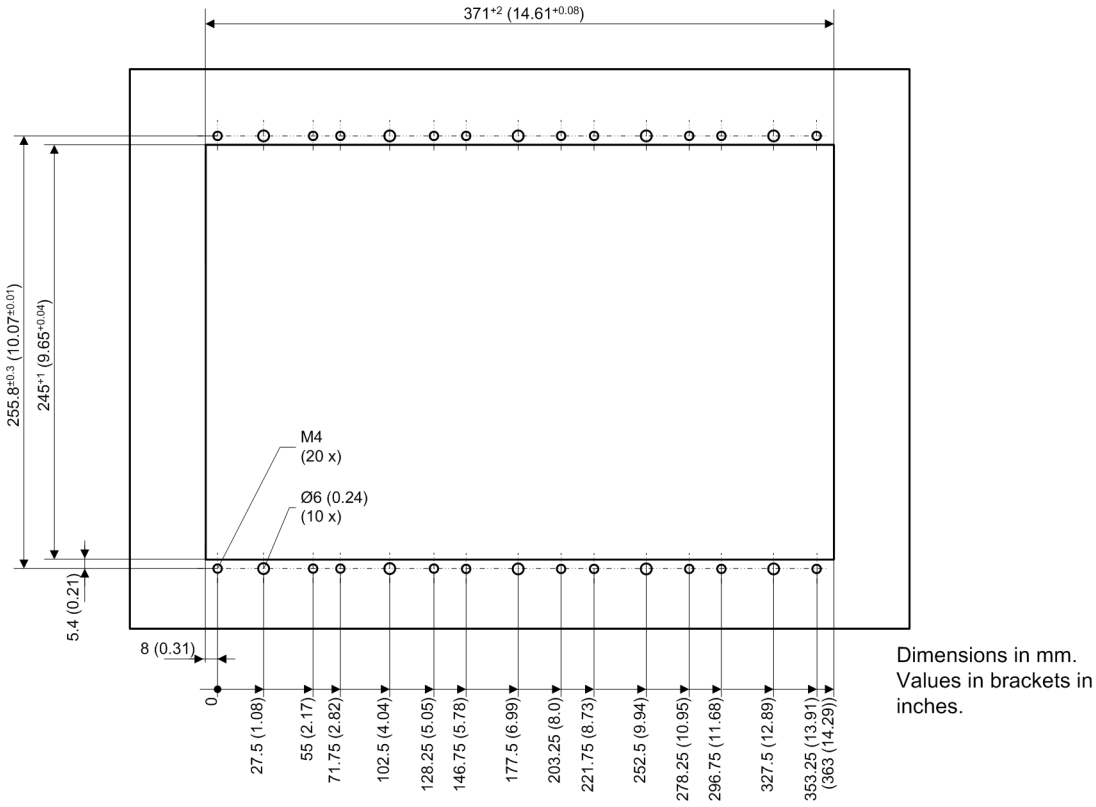

[dw_z2_5-6, 2, en_US]

Figure 6-9 Cut-Out Widths and Drilling Pattern - 5/6 Device, 2nd Device Row

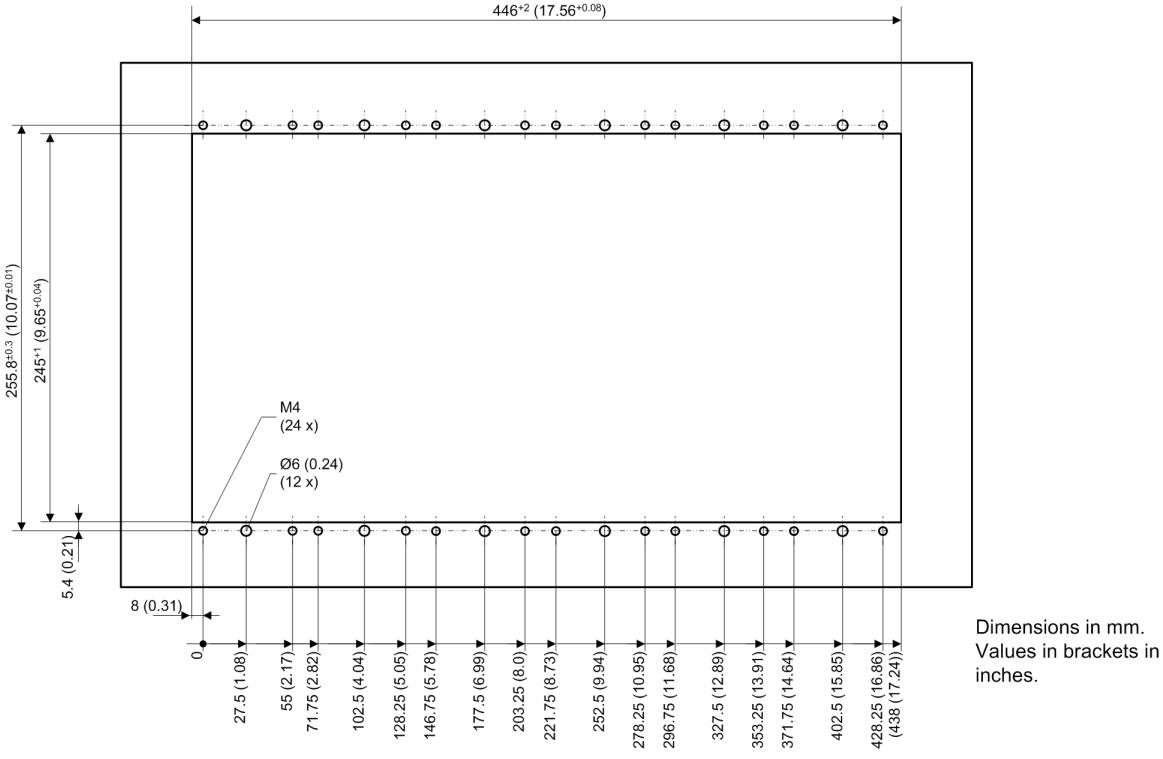

[dw_z2_6-6, 2, en_US]

Figure 6-10 Cut-Out Widths and Drilling Pattern - 1/1 Device, 2nd Device Row

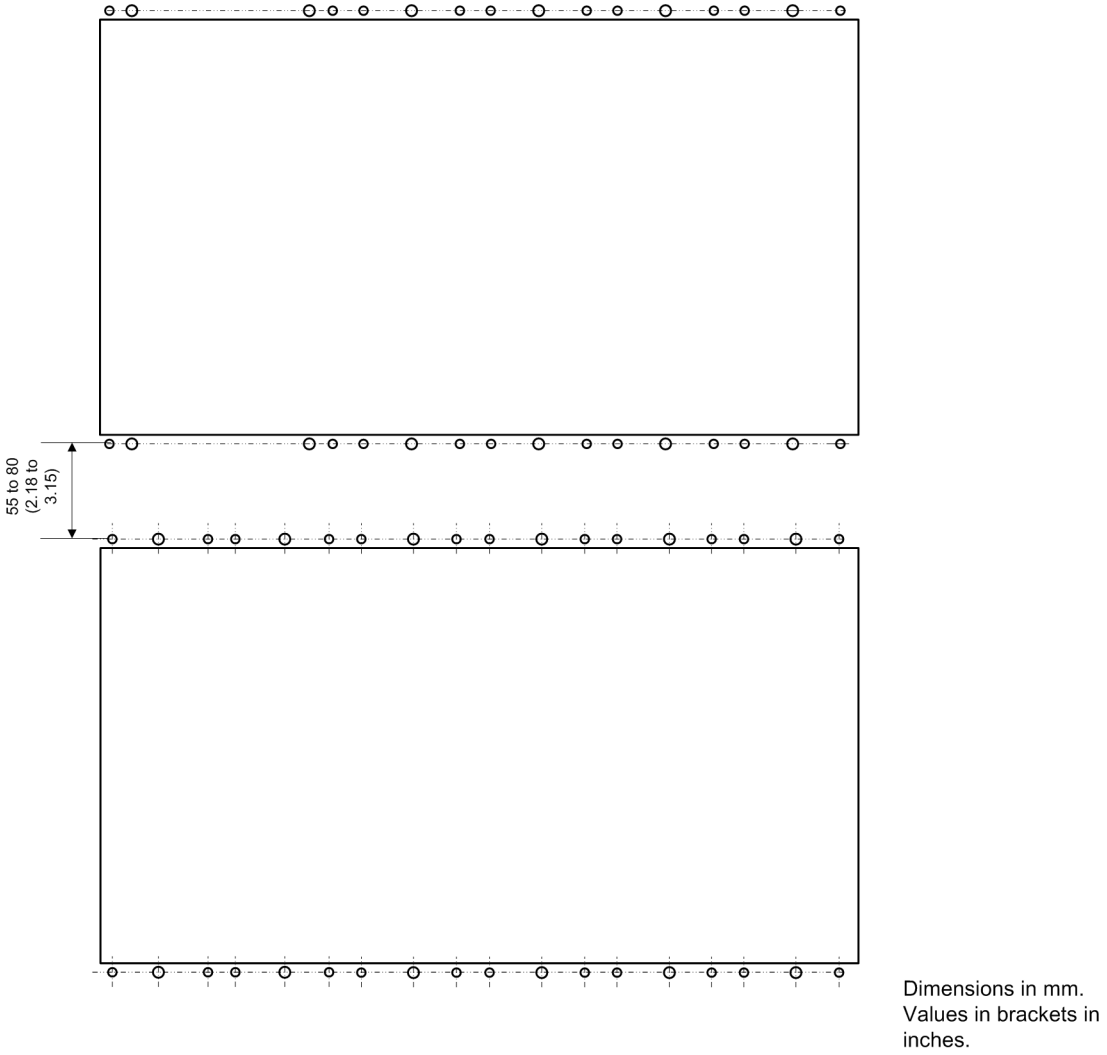

[dw_first and second device row, 1, en_US]

Figure 6-11 Drilling Pattern of 1/1 Devices of the 1st and 2nd Device Row

Siemens recommends a drilling space of at least 55 mm (2.17 in) between the 1st and the 2nd device row. Due to the connecting-cable length, the maximum space may be approx. 80 mm (3.15 in).

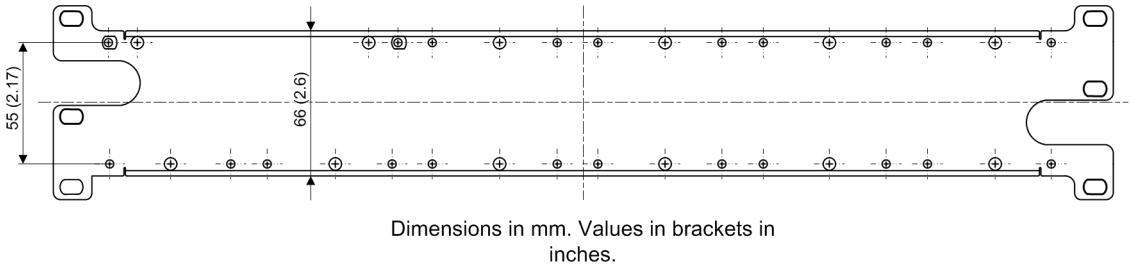

[dw_angle rail, 1, en_US]

Figure 6-12 Angle Rail for the Connection of 1st and 2nd Device Row

Table 6-6 Cut-Out Widths

	Width of the Assembly Opening in mm (in Inches)
1/3 device (base module)	146^{+2} mm ($5.75^{+0.08}$)
1/2 device (base module with one expansion module)	221^{+2} mm ($8.7^{+0.08}$)

	Width of the Assembly Opening in mm (in Inches)
2/3 device (base module with 2 expansion modules)	296^{+2} mm ($11.65^{+0.08}$)
5/6 device (base module with 3 expansion modules)	371^{+2} mm ($14.61^{+0.08}$)
1/1 device (base module with 4 expansion modules)	446^{+2} mm ($17.56^{+0.08}$)

Table 6-7 Variable Housing Widths

	Dimension a **Housing Widths in mm (in Inches)** **(Total Width: Housing Width + 4.6 mm (0.18 in))**
1/3 device	145 (5.71)
1/2 device	220 (8.66)
2/3 device	295 (11.61)
5/6 device	370 (14.57)
1/1 device	445 (17.52)

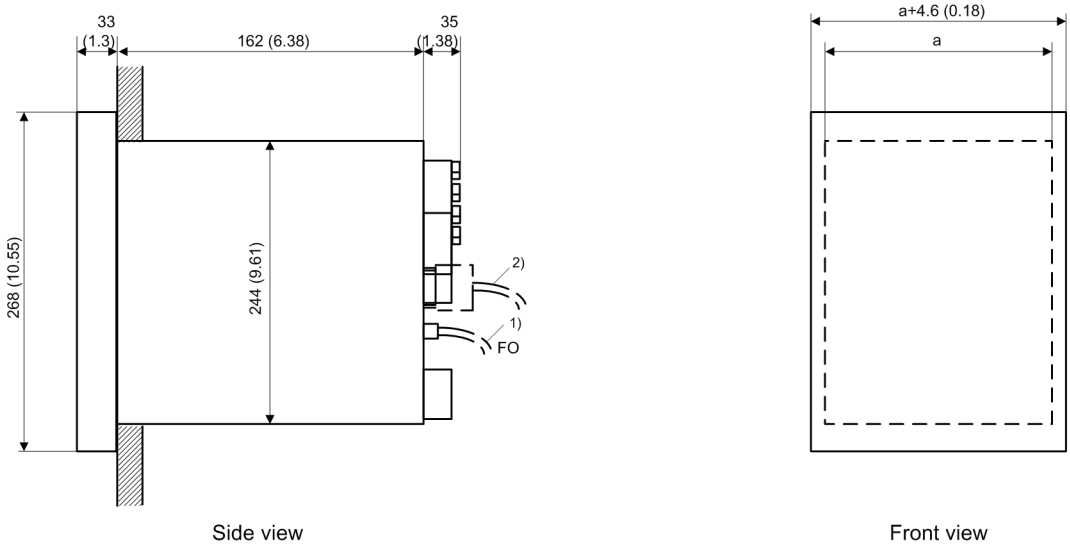

Dimensions in mm. Values in brackets in inches.

Attention!

1) For FO cables, a minimum bending radius R = 50 mm (1.97 inch) must be considered according to the type.

2) For D-sub connector plugs, the axial length of the plug + cable bending radius must be considered. Minimum bending radius R = 50 mm (1.97 inch)

[dw_surface_mounting_in, 1, en_US]

Figure 6-13 Flush-Mounting Devices, Dimensions from the Side and Front Views

Surface-Mounting Devices with Integrated On-Site Operation Panel (Modular Device)

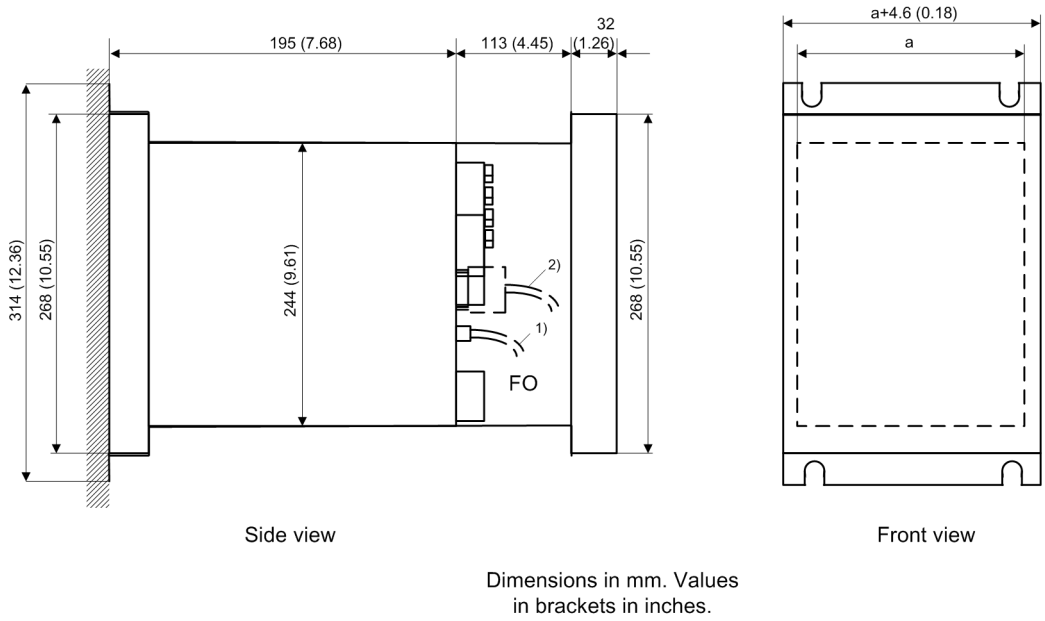

Attention!

1) For FO cables, a minimum bending radius R = 50 mm (1.97 inch) must be considered according to the type.

2) For D-sub connector plugs, the axial length of the plug + cable bending radius must be considered. Minimum bending radius R = 50 mm (1.97 inch)

[dwosopin-070211-01.tif, 2, en_US]

Figure 6-14 1/3-Surface-Mounting Device with Integrated On-Site Operation Panel, Dimensions from the Side and Front Views

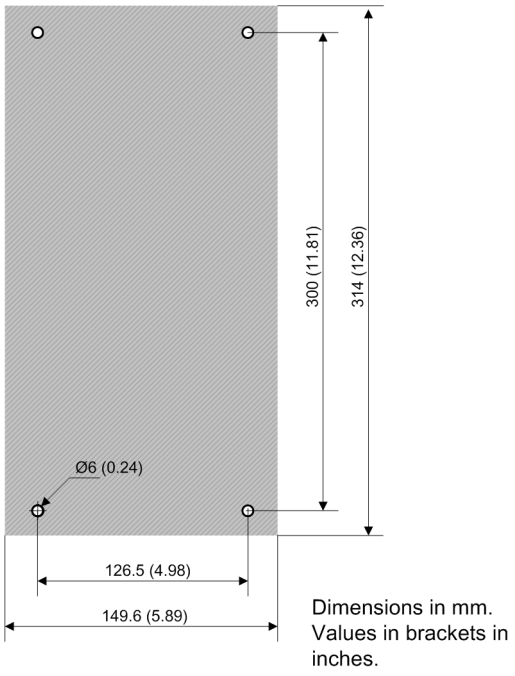

[dwbohrge-1_3.vsd, 1, en_US]

Figure 6-15 Drilling Pattern of a 1/3 Surface-Mounting Device – 1st Device Row

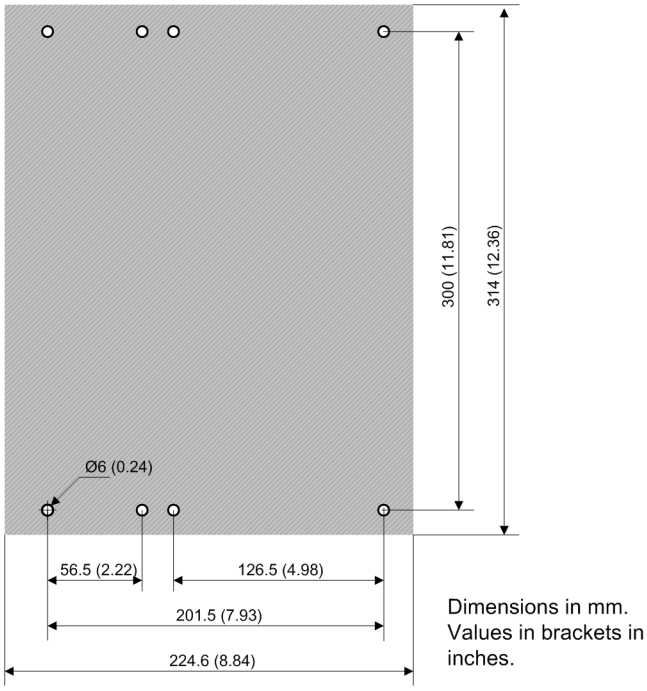

[dwbohrge-1_2.vsd, 1, en_US]

Figure 6-16 Drilling Pattern of a 1/2 Surface-Mounting Device – 1st Device Row

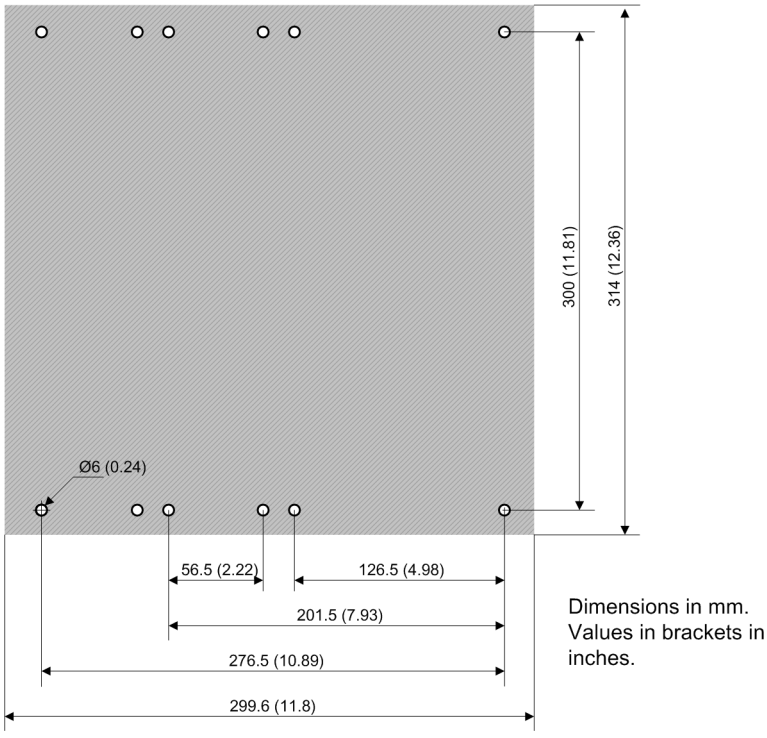

[dwbohrge-2_3.vsd, 1, en_US]

Figure 6-17 Drilling Pattern of a 2/3 Surface-Mounting Device – 1st Device Row

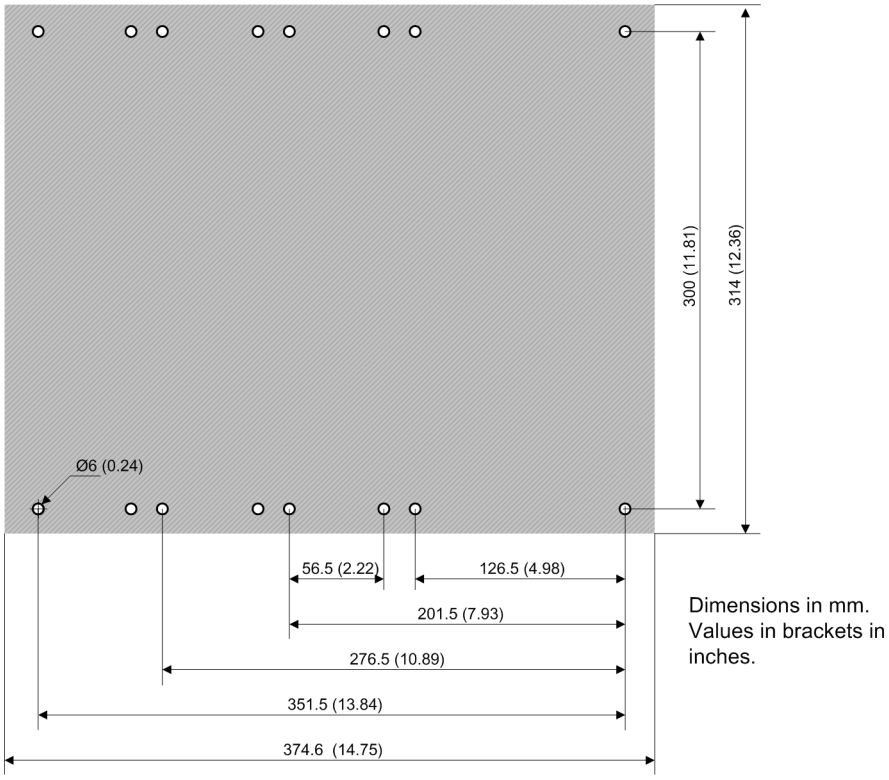

[dwbohrge-5_6.vsd, 1, en_US]

Figure 6-18 Drilling Pattern of a 5/6 Surface-Mounting Device – 1st Device Row

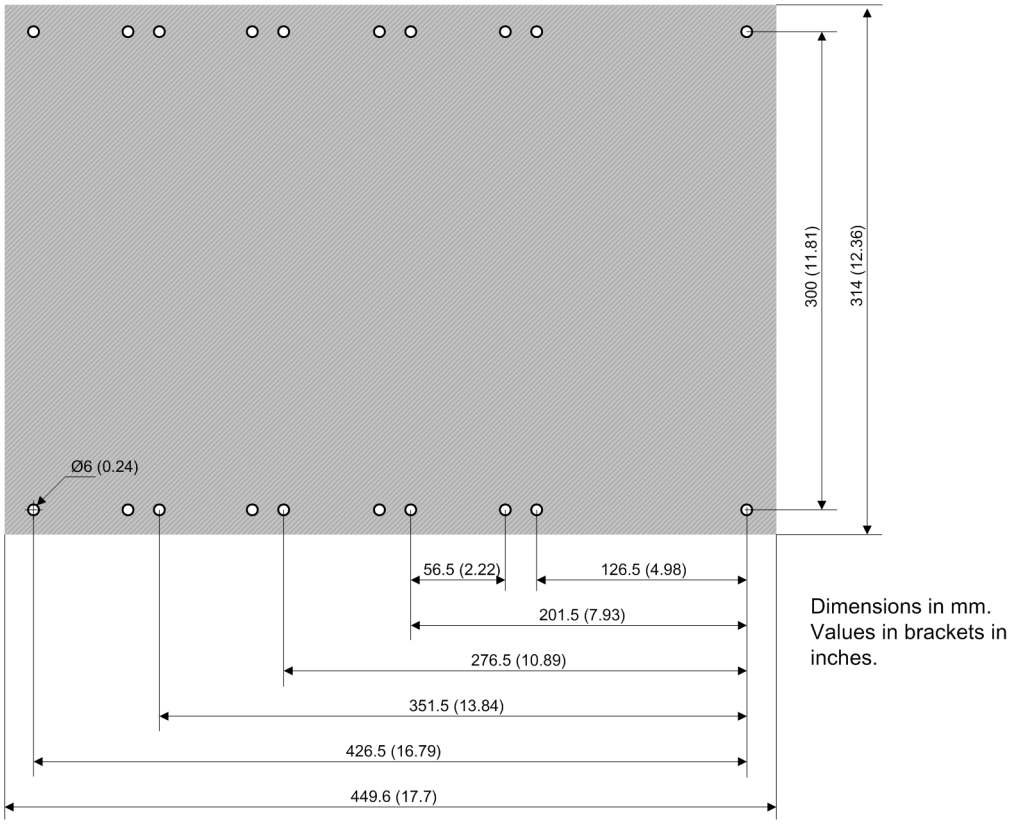

[dwbohrge-070211-01.tif, 2, en_US]

Figure 6-19 Drilling Pattern of a 1/1 Surface-Mounting Device – 1st Device Row

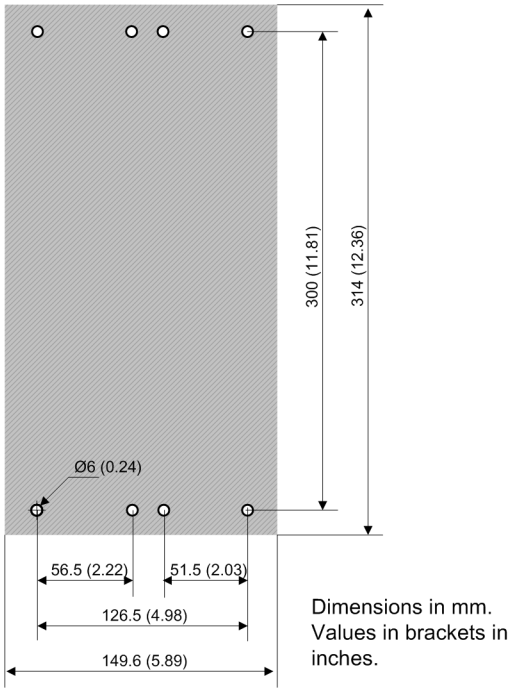

[dw_z2_bohr_1-3.vsd, 1, en_US]

Figure 6-20 Drilling Pattern of a 1/3 Surface-Mounting Device – 2nd Device Row

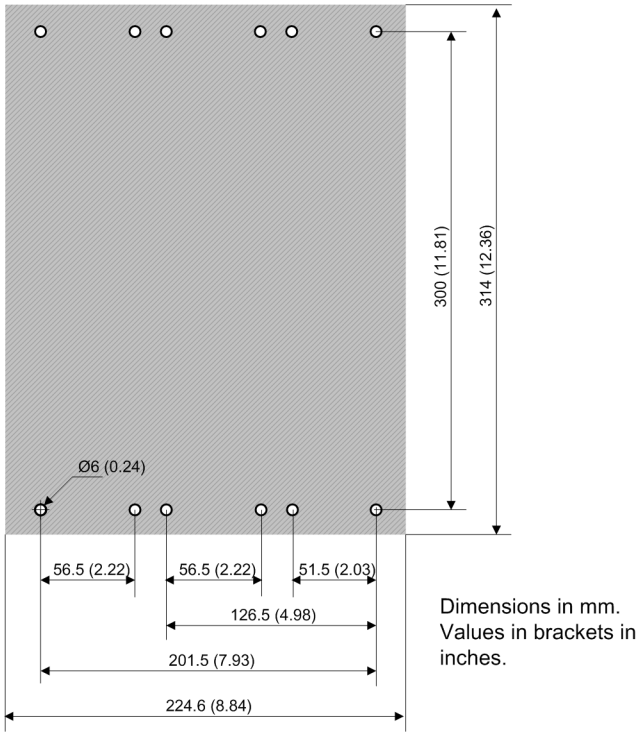

[dw_z2_bohr_1-2.vsd, 1, en_US]

Figure 6-21 Drilling Pattern of a 1/2 Surface-Mounting Device – 2nd Device Row

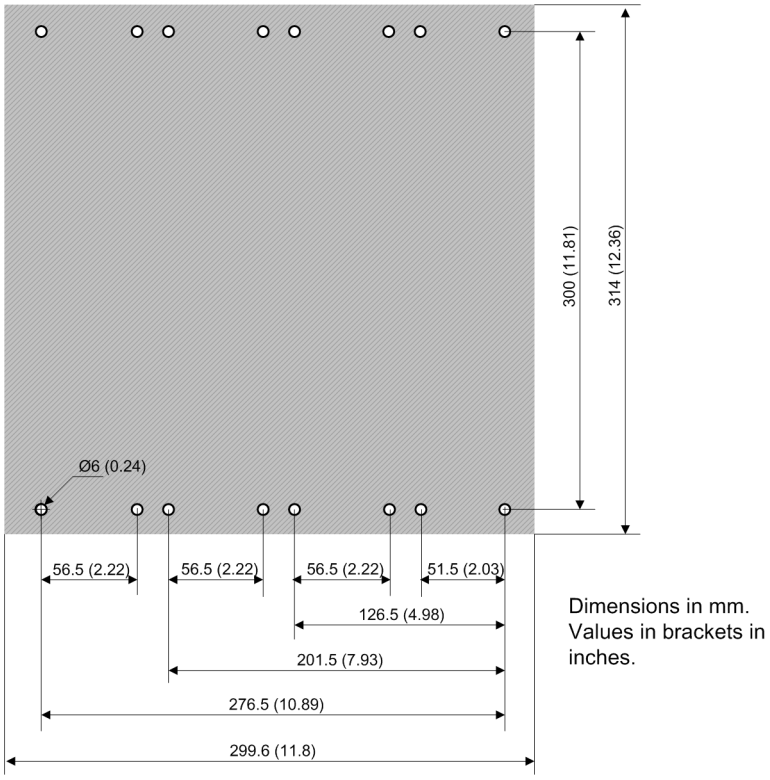

[dw_z2_bohr_2-3.vsd, 1, en_US]

Figure 6-22 Drilling Pattern of a 2/3 Surface-Mounting Device – 2nd Device Row

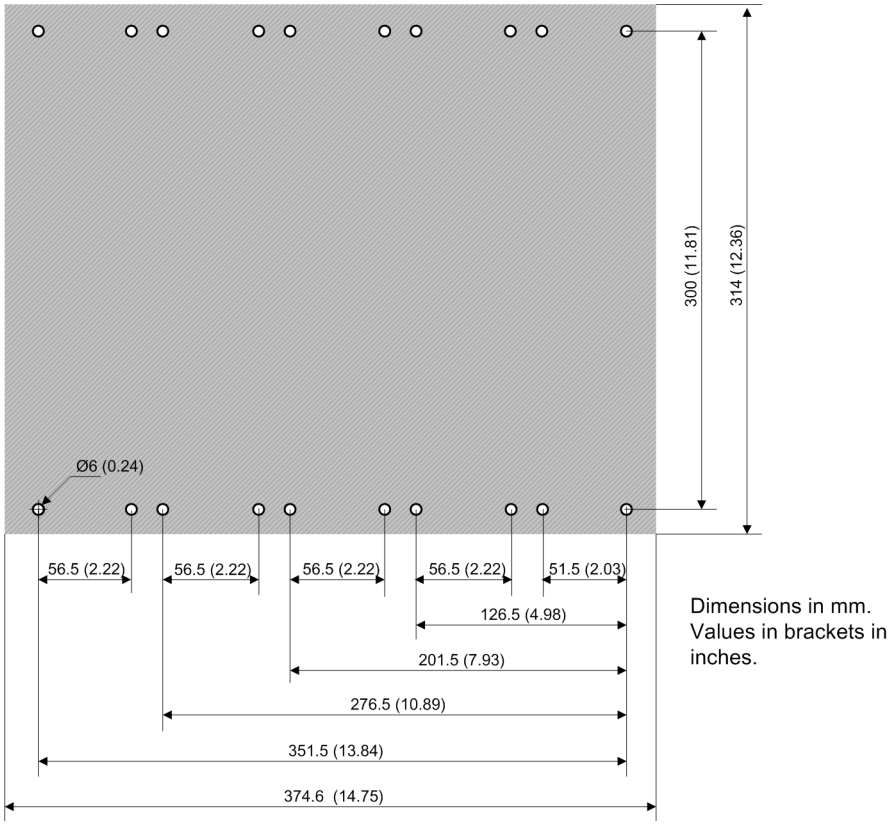

[dw_z2_bohr_5-6.vsd, 1, en_US]

Figure 6-23 Drilling Pattern of a 5/6 Surface-Mounting Device – 2nd Device Row

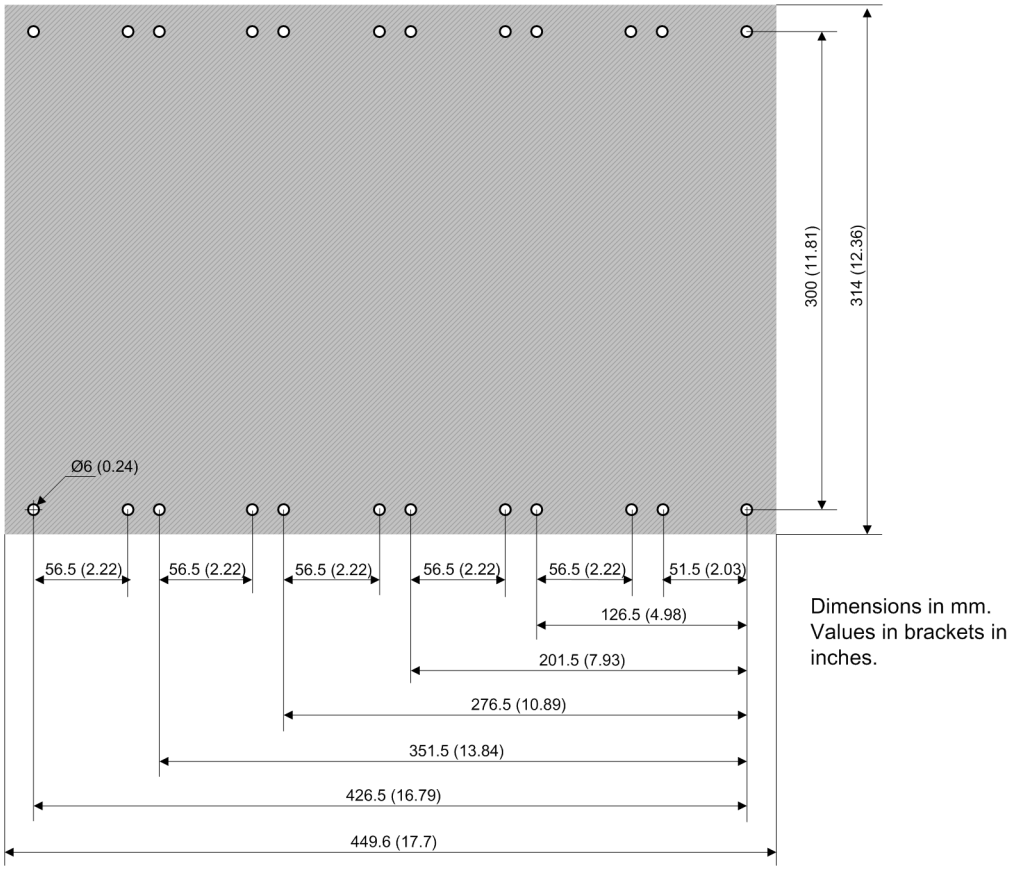

[dw_z2_bohr_1-1.vsd, 1, en_US]

Figure 6-24 Drilling Pattern of a 1/1 Surface-Mounting Device – 2nd Device Row

Surface-Mounting Devices with Integrated On-Site Operation Panel (Non-Modular Device)

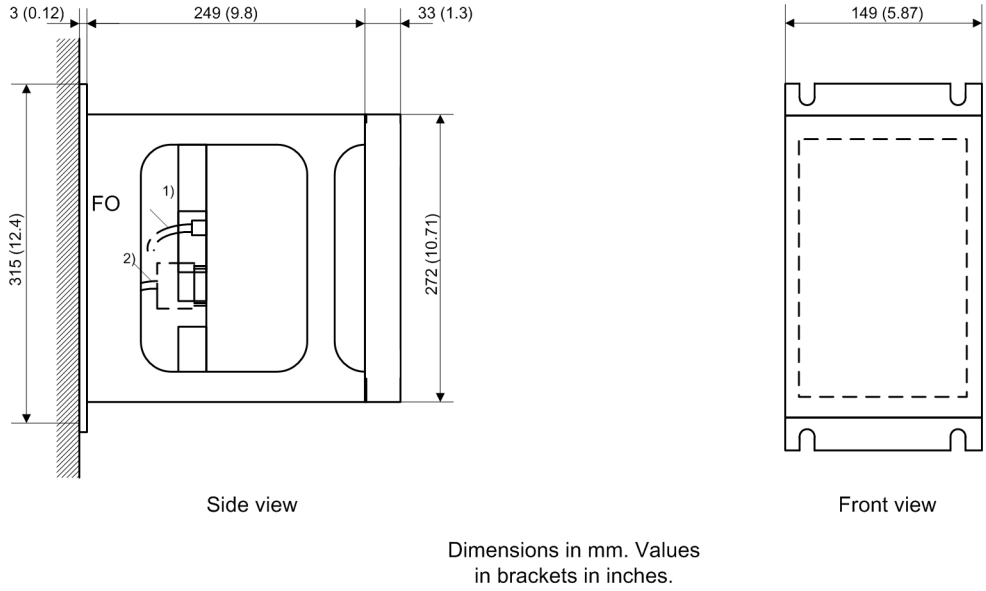

Attention!

1) For FO cables, a minimum bending radius R = 50 mm (1.97 inch) must be considered according to the type.

2) For D-sub connector plugs, the axial length of the plug + cable bending radius must be considered. Minimum bending radius R = 50 mm (1.97 inch)

[dw_console side view.vsd, 2, en_US]

Figure 6-25 Non-Modular Surface-Mounting Device with Integrated On-Site Operation Panel, Dimensions from the Side and Front Views

Surface-Mounting Devices with Integrated On-Site Operation Panel (Non-Modular Device)

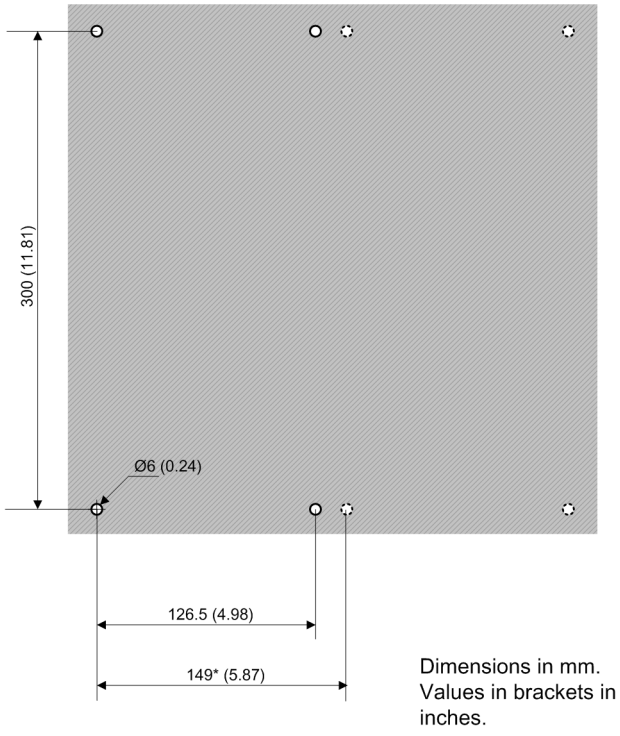

[dw_drilling non modular surface mounting with several consoles, 1, en_US]

Figure 6-26 Drilling Pattern of a Non-Modular Surface-Mounting Device - Several Consoles

* The 149 mm are valid if several mounted consoles are to be mounted next to each other.

Surface-Mounting Devices with Detached On-Site Operation Panel

You can find the drilling pattern for the devices in chapter *Surface-Mounting Devices with Integrated On-Site Operation Panel (Modular Device) , Page 210*.

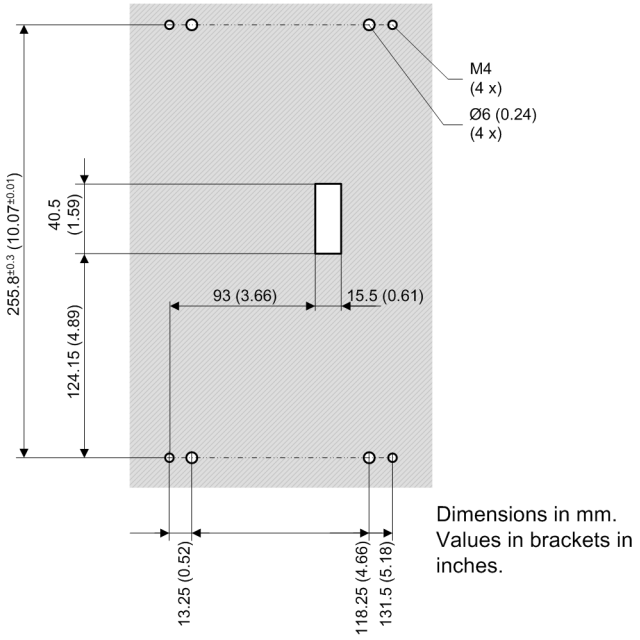

[dw_z1_osop_1-3, 1, en_US]

Figure 6-27 Drilling Pattern of the On-Site Operation Panel of the 1/3 Device

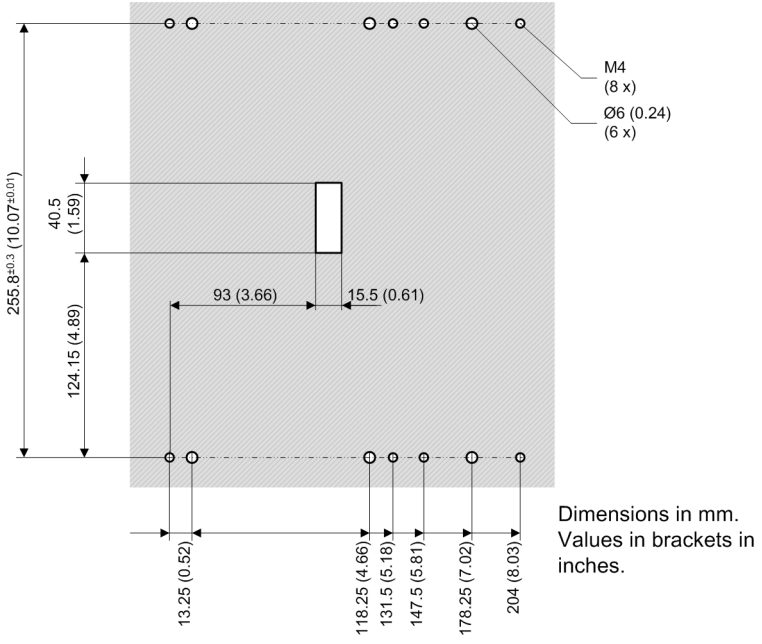

[dw_z1_osop_1-2, 1, en_US]

Figure 6-28 Drilling Pattern of the On-Site Operation Panel of the 1/2 Device

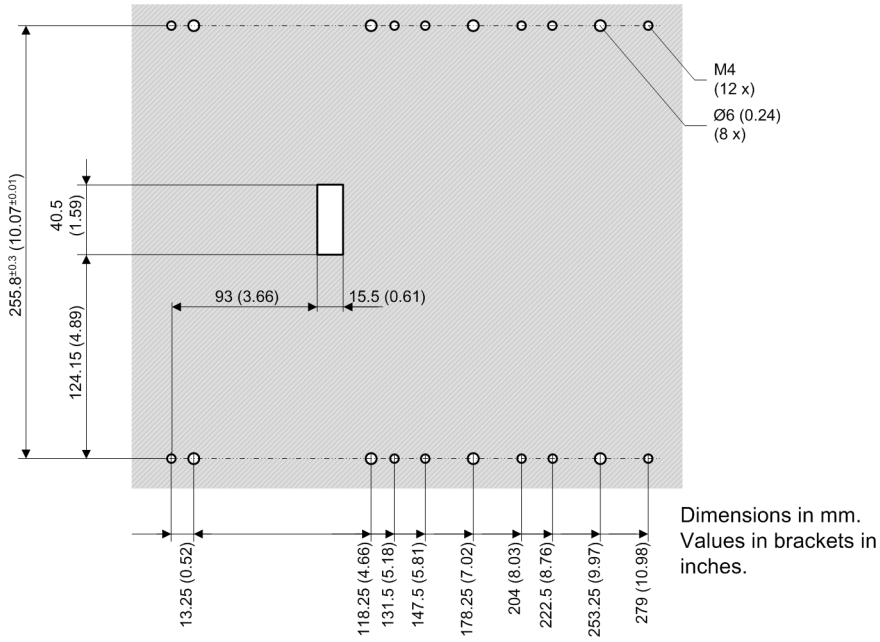

[dw_z1_osop_2-3, 1, en_US]

Figure 6-29 Drilling Pattern of the On-Site Operation Panel of the 2/3 Device

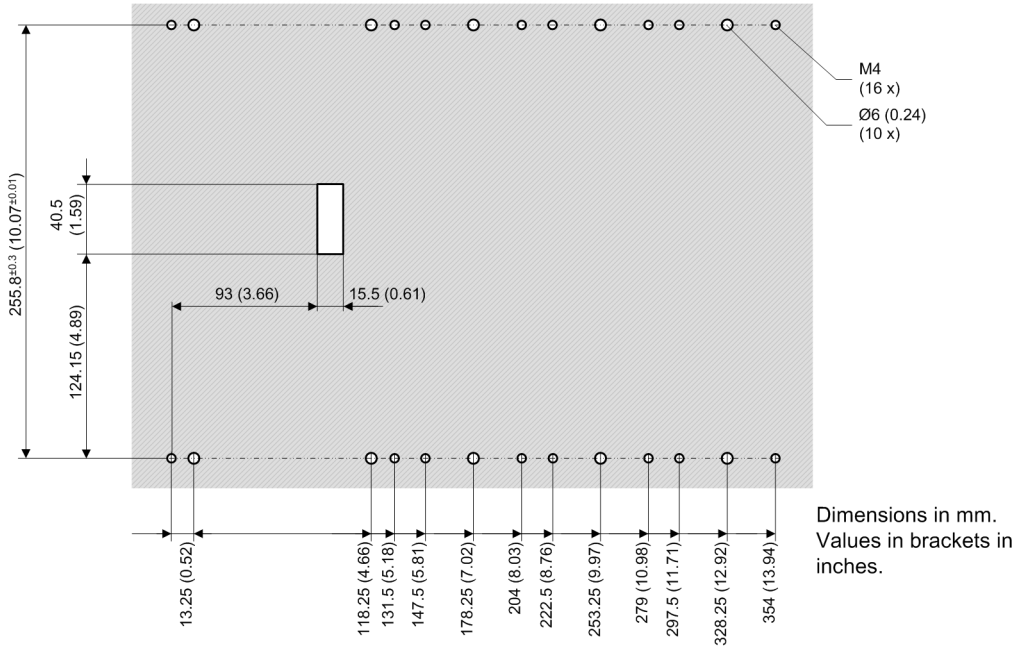

[dw_z1_osop_5-6, 1, en_US]

Figure 6-30 Drilling Pattern of the On-Site Operation Panel of the 5/6 Device

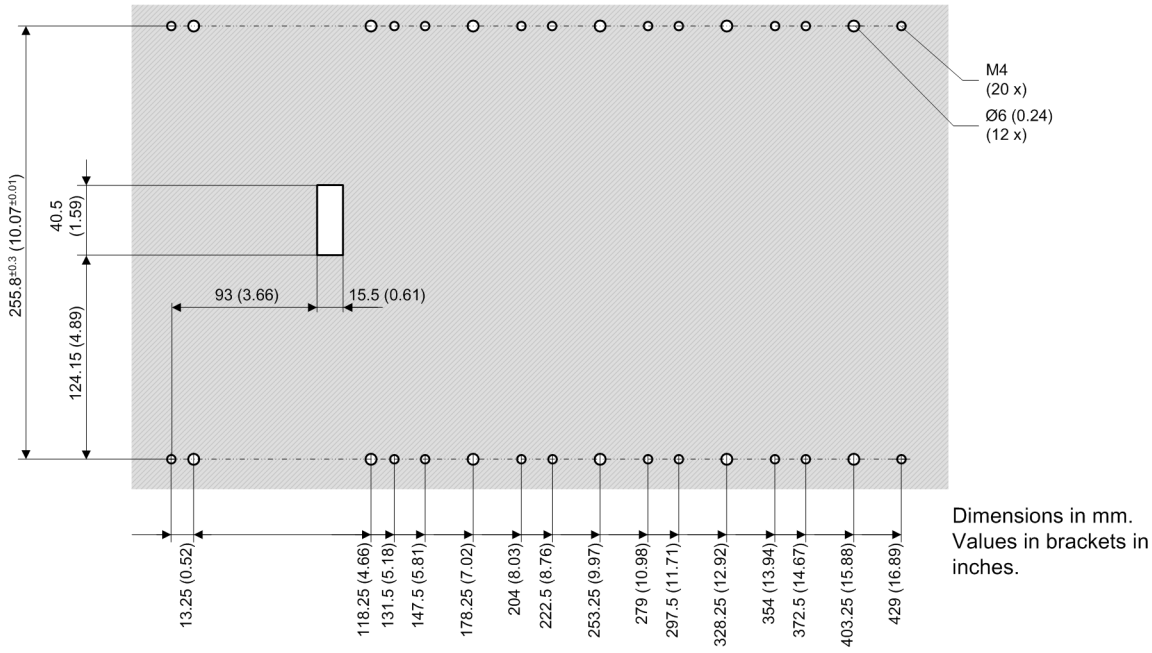

[dw_z1_osop_1-1, 1, en_US]

Figure 6-31 Drilling Pattern of the On-Site Operation Panel of the 1/1 Device

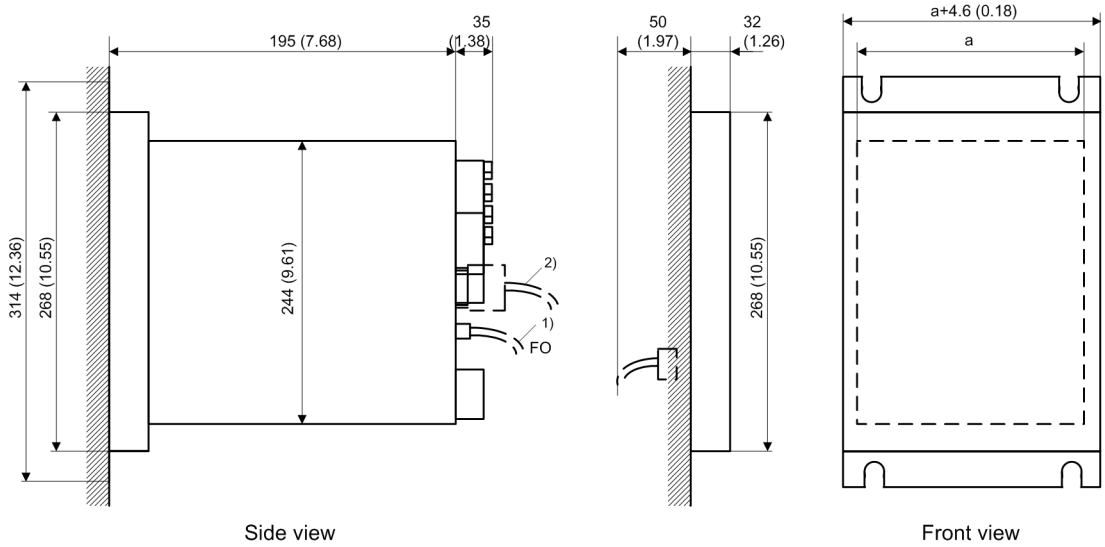

Dimensions in mm. Values in brackets in inches.

Attention!

1) For FO cables, a minimum bending radius R = 50 mm (1.97 inch) must be considered according to the type.

2) For D-sub connector plugs, the axial length of the plug + cable bending radius must be considered. Minimum bending radius R = 50 mm (1.97 inch)

[dwosopab-070211-01.tif, 2, en_US]

Figure 6-32 Surface-Mounting Device with Detached On-Site Operation Panel, Dimensions in the Side and Front Views

Refer to *Table 6-7* for the variable dimension a.

The drilling patterns correspond to the following graphics *Figure 6-15* to *Figure 6-24*.

The cable length for the detached operation panel is up to 5 m (196.85 in).

6.15 Modular Device Name Plate

In the following table, the name plate of a modular device is explained as an example. The name plate is located on the device.

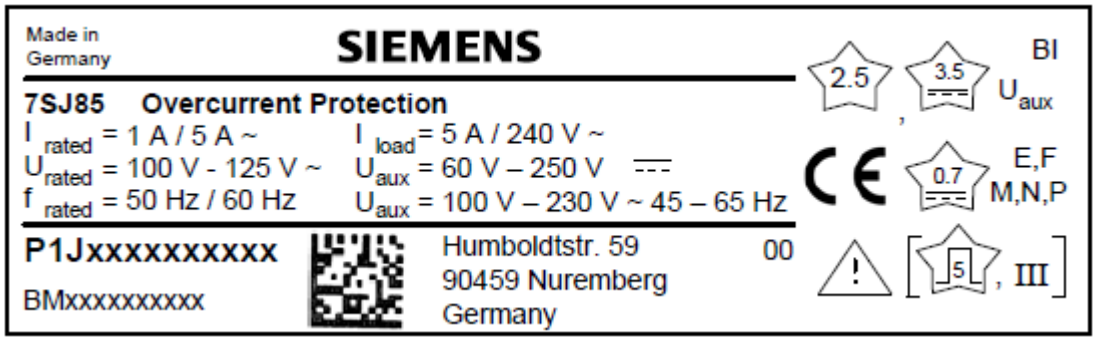

7SJ85	Device type or, in the case of extension modules, designation of the module
Overcurrent Protection	Product group
I_{rated}, V_{rated}, f_{rated}	Rated values (which are specified when current and/or voltage transformers are placed on the printed circuit board assembly.)
I_{load}	This value is specified when relays are placed on the module.
V_{aux}	Values for the power supply
P1JXXXXXXXXXX	Technical Numbering System (TNS), maximum 18 digits
BMXXXXXXXXXX	Serial number
	QR code
2.5	Insulation test of the voltage inputs, current inputs, and binary outputs with AC 2.5 kV
3.5	Insulation test of the power supply (V_{aux}) and binary inputs (BI) with DC 3.5 kV
0.7	Insulation testing of all sealed-off interfaces with DC 700 V
E, F, M, N, P	Designation of the ports into which the plug-in modules are plugged.
5, III	5 kV impulse voltage test [type test] in compliance with Class III
CE	European conformity mark
!	Pay attention to the overall documentation for the device (Product information, Device manual, Hardware manual, Operating manual, and Communication protocol manuals)

6.16 Name Plate of Non-Modular Devices (7xx82)

In the following table, the name plate of a non-modular device is explained as an example. The name plate is located on the device.

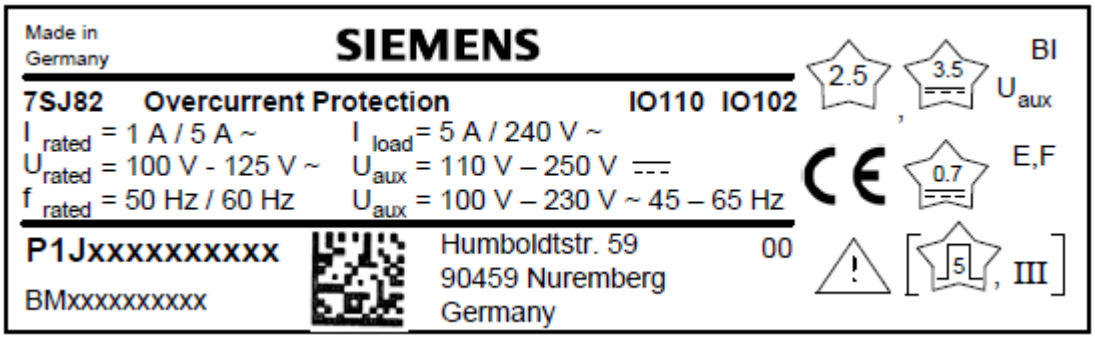

7SJ82	Device type
Overcurrent Protection	Product group
IO110 IO102	Designation of the I/O printed circuit board assemblies
I_{rated}, V_{rated}, f_{rated}	Rated values (which are specified when current and/or voltage transformers are placed on the printed circuit board assembly.)
I_{load}	This value is specified when relays are placed on the module.
V_{aux}	Values for the power supply
P1JXXXXXXXXXX	Technical Numbering System (TNS), maximum 18 digits
BMXXXXXXXXXX	Serial number
	QR code
2.5	Insulation test of the voltage inputs, current inputs, and binary outputs with AC 2.5 kV
3.5	Insulation test of the power supply (V_{aux}) and binary inputs (BI) with DC 3.5 kV
0.7	Insulation testing of all sealed-off interfaces with DC 700 V
E, F	Designation of the ports into which the plug-in modules are plugged.
5, III	5 kV impulse voltage test [type test] in compliance with Class III
CE	European conformity mark
!	Pay attention to the overall documentation for the device (Product information, Device manual, Hardware manual, Operating manual, and Communication protocol manuals)

6.17 Name Plate, UL Approval, Base Module and 1/3 Base Module

c UL us LISTED IND. CONT. EQ. 69CA t_{Surr}: max. 70°C normal op. P_{aux}: max. 100 VA Binary input U_{rated} DC 250 V For additional output ratings see product information.	
c UL us LISTED	UL approved for Canada and the USA
IND. CONT. EQ.	Industrial controller
69CA	Approval number
t_{Surr}: max. 70 °C normal op.	The ambient temperature must not exceed 70 °C or 158 °F during normal operation.
P_{aux}: max. 100 VA	Maximum power consumption of the device
For additional output ratings see product information	For additional output ratings see Product information.

6.18 Name Plate, UL Approval, Expansion Module

c UL us LISTED IND. CONT. EQ. 69CA t_{Surr}: max. 70°C normal op. Listed accessory for use with manufacturer's protective relay.	
c UL us LISTED	UL approved for Canada and the USA
IND. CONT. EQ.	Industrial controller
69CA	Approval number
t_{Surr}: max. 70 °C normal op.	The ambient temperature must not exceed 70 °C or 158 °F during normal operation.
Listed accessory for use with manufacturer´s protection relay.	Approved accessory for use with a protection device from Siemens

6.19 Battery

Type	CR2032 Button cell Lithium
Voltage	3 V
Capacity	230 mAh
Average service life of the battery, unpowered after removal of protective film	At least 6 months
Service life of the battery in the activated state with protective film removed	10 years

NOTE

After the **Battery fault** indication, you must replace the battery within 2 weeks. If ignored, data loss may occur.

6.20 SDHC Memory Card

NOTE

You can use only Siemens SDHC memory cards.

Capacity	16 GB[11]
Performance class	≥ Class 10
Temperature range	-40 °C to +85 °C
Flash type	SLC

Dimensions

	Width x Height x Depth (in Inches)
SDHC memory card	24 mm x 32 mm x 2.1 mm (0.94 x 1.26 x 0.08)

[11] Usable capacity: Approx. 15 GB

6.21 Display Resolution

LCD Graphic Display (Liquid Crystal Display) Small	192 x 128 pixels
LCD Graphic Display (Liquid Crystal Display) Large	240 x 320 pixels

7 Ordering Information

7.1 Ordering Spare Parts and Accessories

7.1.1 Order Configurator and Order Options

Order Configurator

The order configurator assists you in the selection of SIPROTEC 5 products. The order configurator is a Web application that can be used with any browser. The order configurator can be used to configure complete devices or individual components, such as communication modules, expansion modules, or other accessories. At the end of the configuration process, the product code and a detailed presentation of the configuration result are provided. The product code unambiguously describes the selected product and also serves as an order number.

Ordering Options

The following ordering options are possible for SIPROTEC 5 products:

- Device
- Single part
- DIGSI 5
- Functional enhancement

NOTE

To order single parts in the order configurator, use the **Single part** link.

Individual parts are:

- Replacement base module
- Expansion module
- Plug-in module
- Sensors for arc protection
- Operation panel
- Terminal
- Accessories

7.1.2 Ordering Accessories

NOTE

To order terminals, terminal accessories, and mechanical accessories in the order configurator, use the **Single part** link.

Table 7-1 Accessories

Group	Accessories
Terminal	Voltage terminal, terminal block, 14-pole
Terminal	Voltage input (power supply) Terminal block, 2-pole[12]

[12] Recommended tightening torque for fixing the terminal at the rear side: 0.3 Nm

Group	Accessories
Terminal	Type A current terminal, 4 x protection (for modular devices)
Terminal	Type A current terminal, 3 x protection and 1 x measurement (for modular devices)
Terminal	Type A current terminal, 4 x measurement (for modular devices)
Terminal	Type B current terminal, 4 x protection (for non-modular devices)
Terminal	Type B current terminal, 3 x protection and 1 x measurement (for non-modular devices)
Terminal	2-pole cross connector for current terminal
Terminal	Terminal pair component IO110[12]
Terminal	Terminal kit only for IO230/231[12]
Terminal	2-pole cross connector for voltage terminal
Terminal	Cover for current terminal block
Terminal	Cover for voltage terminal block
Accessories	Cable, integrated operation panel 0.43 m
Accessories	Cable, detached operation panel 2.50 m
Accessories	Cable, detached operation panel 5.00 m
Accessories	Cable set COM link cable
Accessories	Cover plate for plug-in modules
Accessories	Set of angle brackets
Accessories	Labeling strips for LEDs/keypad
Accessories	Set of parts for mounting bracket 1/2
Accessories	Set of parts for mounting bracket 2/3
Accessories	Set of parts for mounting bracket 5/6
Accessories	Set of parts for mounting bracket 1/1
Accessories	Screw cover 1/3, type C11
Accessories	Screw cover 1/3, type C22
Accessories	Screw cover 1/6, type C21
Accessories	Bus termination plate
Accessories	Assembly frame for panel surface mounting for non-modular 7xx82 devices
Accessories	SDHC memory card for 7KE85
Accessories	Battery holder
Accessories	Connecting cable for 2nd row
Accessories	Arc push-buttons
Sensors for arc protection	Point sensor with line length of 3 m
Sensors for arc protection	Point sensor with line length of 4 m
Sensors for arc protection	Point sensor with line length of 5 m
Sensors for arc protection	Point sensor with line length of 10 m
Sensors for arc protection	Point sensor with line length of 15 m
Sensors for arc protection	Point sensor with line length of 20 m
Sensors for arc protection	Point sensor with line length of 35 m
Sensors for arc protection	Line sensor with line length of 5 m
Sensors for arc protection	Line sensor with line length of 10 m
Sensors for arc protection	Line sensor with line length of 20 m

Group	Accessories
Sensors for arc protection	Line sensor with line length of 30 m
Sensors for arc protection	Line sensor with line length of 40 m
Sensors for arc protection	Supply line for line sensors, length: 3 m
Sensors for arc protection	Supply line for line sensors, length: 5 m
Sensors for arc protection	Supply line for line sensors, length: 10 m

Glossary

Control display

The control display becomes visible for devices with a large display after pressing the Control key. The diagram contains the switching devices to be controlled in the feeder. The control display serves for implementing switching operations. Specification of this diagram forms part of configuring.

DCF77

The precise official time is determined in Germany by the Physikalisch-Technische Bundesanstalt PTB in Brunswick. The atomic clock unit of the PTB transmits this time via the long-wave time signal transmitter in Mainflingen near Frankfurt/Main. The emitted time signal can be received within a radius of approx. 1500 km from Frankfurt/Main.

GOOSE

Generic Object-Oriented Substation Event

Ground

The conductive ground whose electric potential can be set equal to 0 at every point. In the area of grounding conductors, the ground can have a potential diverging from 0. The term **reference ground** is also used for this situation.

Grounding

The grounding is the entirety of all means and measuring for grounding.

IEC

International Electrotechnical Commission

Parameterization

Comprehensive term for all setting work on the device. You can parameterize the protection functions with DIGSI 5 or sometimes also directly on the device.

Protection Device

A protection device detects erroneous states in distribution networks, taking into account various criteria, such as error distance, error direction or fault direction, triggering a disconnection of the defective network section.

RSTP

Rapid Spanning Tree Protocol

SNMP

Simple Network Management Protocol

SNTP

Simple Network Time Protocol

Index

A

B

C

D

E

F

I

M

O

P

R

S

T

V