463

Modern Techniques for Protecting, controlling and monitoring power transformers

Working Group

B5.05

June 2011

Modern Techniques for protecting, controlling and monitoring power transformers

Working Group
B5.05

Members:

Mohindar S. Sachdev (CA), Simon Raj Aggarwal (UK), Ciprian Diaconu (RO),
Hans-Joachim Hermann (DE), Sang-Hee Kang (KR), N.N. Misra (IN), Wilhelm Offhaus (DE),
Rudolf Simon (DE), Staffan Troedsson (SE)

Corresponding Membres:

R. Chano (CA), Roger Cormack (ZA), Sungsoo Kim (CA), Pratap Mysore (US),
Brian Sparling(CA), Peter Stewart (AU), Murty Yalla (US)

ISBN: 978- 2- 85873- 152-7

Modern Techniques for Protecting, Controlling and Monitoring Power Transformers

Prepared by

Cigré Study Committee B5
Working Group B5.05

Regular Members:

Mohindar S. Sachdev, Convenor
Raj Aggarwal
Ciprian Diaconu
Hans-Joachim Herrmann
Sang-Hee Kang
N.N. Misra
Wilhelm Offhaus
Staffan Troedsson

Corresponding Members:

Simon R. Chano
Roger Cormack
Sungsoo Kim
Pratap Mysore
Brian Sparling
Peter Stewart
Murty Yalla

Comments on this report were received from the following members of Study Committee B5:

1. Rodney Hughs, Australia
2. Volker Leitloff, France
3. Andrei Podshivalin, Russia
4. Richard Adams, UK

Modern Techniques for Protecting, Controlling and Monitoring Power Transformers

Table of Contents

Executive Summary

The Cigré Study Committee B5 decided at its meeting in Sibiu Romania in 2001to set up a Working Group for preparing a report on transformer protection. The scope of the working group approved by the Study Committee and then the Technical Committee of Cigré is as follows.

"To review the techniques presently used for protecting power transformers, their monitoring and control and provide recommendations for their application."

This report is divided in six sections and nine appendices following those sections. Some contributors to this report are practicing engineers who have been using IEC standards and practices and other contributors have been using IEEE Standards and practices. The identification of protection and control devices are different in the IEC and IEEE documents. Some figures and descriptions use IEC symbols and others use IEEE symbols. Other issues described in this section are as follows.

- Grounding of transformers, types of grounding and impact of grounding impedance
- Off-circuit and on-load tap changers
- Types of faults experienced on transformers and their frequency
- Concept of main, second main and backup protection
- Protective relays applied to network transformers, unit transformers, autotransformers and distribution transformers and
- Protection of transformers with fuses

Different technologies have been used during the more than one hundred years for designing and manufacturing protective relays. Many techniques previously used in electromechanical and solid-state relays are now used in numerical relays. An appreciation of the previous technologies is important for knowing the roots of protection and avoiding the phenomenon of re-inventing the wheel. The development of electromagnetic, electromechanical, solid-state and numerical technologies is reviewed in Section 2 of this report. Modern numerical relays perform many functions other than protection. Some of the more commonly performed other functions are identified in this section as well.

The third section addresses the issues concerning protection of transformers. Specifically, the following techniques are described in that section.

- Differential protection of two and three winding transformers, autotransformers and phase-shifting transformers
- Restricted earth fault protection
- Over-fluxing protection
- Negative-sequence protection
- Zero-sequence current and voltage protection
- Earth fault (tank) protection
- Neutral displacement in solidly grounded systems and
- Overcurrent protection
- Distance protection
- Application of multi-function numerical relays
- Buchholz relay and
- Thermal overload protection

The fourth section is devoted to monitoring of transformers. The following issues are addressed in that section.

- High temperature detection

- Oil level / flow monitoring
- Fire protection
- Pressure relief valve
- Frequency response analysis
- Integrity of insulating oil
- Partial discharge measurements

Control of transformers is addressed in the fifth section of this report. The following issues are reviewed in this section

- Manual control
- Automatic voltage control using electromechanical and solid-state technologies.

  Issues concerning voltage setting, time delays, line drop compensation, CT and VT polarity and phasing, direction of power flow and combined voltage and load power factor are addressed.

  Methods of controlling transformers that are operating in parallel are described in this section. Specifically addressed topics are requirements for parallel operation of transformers, need for controlling transformers operating in parallel and methods of controlling transformers operating in parallel.

  Automatic voltage control using numerical techniques is also addressed. An example of controlling transformers in a large substation is included.

Section six provides a brief description of techniques used in numerical relays for processing sampled and quantized data. While a very large number of techniques are reported in the literature, the following techniques that are presently being used or have a potential of being used in numerical relays are described.

- Techniques for computing phasors from sampled and quantized data such as, Fourier Transform based methods,
- Least squares curve fitting method
- Kalman filtering
- Transformer modelling technique
- Delta-V, Delta-I measurements technique and
- Waveform pattern recognition technique

The nine annexes address the following issues

Annex A: Failure statistics of transformer faults
Annex B: Requirements on current transformers
Annex C: Relay setting examples
Annex D: Mathematical derivations of algorithms
Annex E: Application of low-impedance restricted earth fault protection to autotransformers
Annex F: Vector group and transformer configurations
Annex G: Frequency response analysis
Annex H: References
Annex I: Publications of interest

An attempt has been made to provide an overview of protection, monitoring and control of transformers. Sufficient information has been provided for engineers and technologists who are new to protection field so that they can benefit from this report and make reasonable decisions for protecting transformers. Several issues are addressed in more depth so that engineers practicing

in this field can benefit from the details of practices that are prevalent in industry but may not be in use in their utilities.

Modern Techniques for Protecting, Controlling and Monitoring Power Transformers

1. General issues

General issues, such as, types of transformers, grounding of transformer neutrals, tap changers, types of faults, technology of protective relays, backup protection, and protection of network transformers concerning transformers are discussed in this section.

1.1 Protection function symbols

C37.2 IEEE Standard for Electrical Power System Device Function Numbers, Acronyms and Contact Designations lists information that can be used in drawings and documents for identifying protective devices and functions. Similarly IEC identifies devices by distinct graphic symbols. This document uses a mixture of both practices. The equivalence of these approaches for the protection devices and functions described in this report is listed in Table 1.

Table 1— IEEE numbers and IEC symbols for protection functions

No.	Protection Function	IEEE No.	IEC Symbol
1.	Distance relay	21	Z<
2.	Over-excitation (Volts per Hertz) relay	24	U/f
3.	Under-voltage relay	27	U<
4.	Directional power (Low forward power) relay	32	P<
5.	Reverse power relay	32R	-P>
6.	Under-current or under-power relay	37	I<
7.	Field (over/under excitation) relay; loss of field	40	X<
8.	Reverse-phase or phase-balance current (-ve phase sequence) relay	46	I_2>
9.	Machine or transformer thermal (thermal overload) relay	49	I^2t
10.	Instantaneous overcurrent relay	50	I>
11.	AC inverse time overcurrent relay	51	I>
12.	AC inverse time neutral overcurrent (zero phase sequence) relay	51N	I_n>
13.	Voltage controlled / dependant time overcurrent relay	51V	I(U)>
14.	Overvoltage relay	59	U>

15.	Zero phase sequence overvoltage	59N	U>
16.	Voltage or current balance (fuse failure) relay	60	ΔU
17.	Ground detector (100% stator earth fault [third harmonic, low frequency voltage injection])	64S	R< U_{03h}
18.	Rotor ground detector (rotor earth fault) relay	64R	Re<
19.	AC directional overcurrent relay	67	→ I>
20.	Directional earth fault	67N	→ I_0>
21.	Phase angle measuring (Out of step [pole slip]) relay	78	dZ/dt
22.	Under-frequency relay	81U	f<
23.	Over-frequency relay	81O	f>
24.	Bus Differential relay	87B	ΔI
25.	Generator Differential relay	87G	ΔI
26.	Transformer Differential relay	87T	ΔI

1.2 Grounding of transformer neutral, methods of grounding

Windings of three phase transformers are generally connected in wye or delta configuration. The neutrals of the wye connected windings are grounded using one of the three methods described in this section. Neutral earthing reactors with zigzag-connected windings are generally used to provide a neutral for systems fed by a delta-connected winding. Such a neutral is usually solidly grounded as the neutral earthing reactor provides sufficient grounding impedance. In many cases a secondary wye-connected winding is provided for local LV supply, in which case they are called neutral earthing transformers.

1.2.1 Solid grounding

The neutral of the wye winding of a transformer installed on a high voltage network is connected solidly to ground so that current can flow when a phase to ground fault is experienced on the system connected to the transformer. No intentional resistance is included in the ground connection. However, there always is a resistance in the grounding mat; this resistance is usually small and, in many situations, is not allowed to exceed a specified value by local regulations or utility practices.

1.2.2 Resistance grounding

The level of fault currents due to single phase to ground faults on the terminals of a transformer, installed in a distribution system, may exceed the thermal and / or mechanical withstand capability of the transformer. In such a situation, the ground fault current must be reduced to protect the transformer from serious damage. To achieve this objective, the transformer is sometimes grounded through a resistance whose value is sufficient to limit the fault current below the maximum permissible value. The short time thermal rating of the resistance through which the transformer is grounded must be sufficient to withstand the flow of current for the duration of the fault.

There are two disadvantages of using resistance grounding. The first disadvantage is that the physical size of the resistance is substantial because it has to have the thermal capability to withstand the flow of fault current for the maximum duration for which it might be experienced. The second disadvantage is that when the fault current flows in the resistance there is power loss that is directly proportional to the square of the current and the ohmic value of the resistance.

1.2.3 Reactance grounding

Transformers are sometimes grounded through reactances to overcome the disadvantages of resistance grounding outlined in Section 1.2.2. Reactance grounding is also used for three other objectives. The first objective is to limit the ground fault current at the bus to which the transformer is connected and the system is effectively grounded. Reactance of a small value is used for this purpose. The second objective is to extinguish the arc in the event of a ground fault on a non-effectively grounded system. The third objective is to limit the capacitive ground fault current at the fault location in a non-effectively grounded system thus limiting the potential rise that can occur on exposed parts accessible to operating staff and others. The high levels of reactance grounding that achieves the second and third objectives is usually referred to as Petersen coil

1.2.4 Impact of grounding impedance

The fault current in the primary winding of a transformer due to a fault short circuiting a fraction of the secondary winding is reduced by a factor that is equal to the square of the fraction of the short-circuited winding. For example, if a fault is at the mid-point of the phase winding, the fault current flowing in to the transformer would be one-quarter of the fault current due to a phase to ground fault at the terminal of the transformer.

1.3 Tap changers

Most power transformers are fitted with tap-changers to enable the transformation ratio to be changed so that the system voltage can be maintained as the power flow in the transformer changes. The tap changers may be of off-circuit type if frequent operation is not required or on-load type if operating conditions change more often and different tap settings are needed at different times of a day.

1.3.1 Off-circuit tap-changers

Off-circuit tap-changers also called de-energised tap-changers can only be operated while the transformer is switched off. They are sometimes incorrectly called off-load tap-changers, but it is

not sufficient for the transformer to be on no-load; it has to be completely de-energised before it is safe to change its taps.

The linear selector with bridging contact, shown in Figure 1 is typically used for small tap selectors with up to seven positions. The moving "bridging contact" is shown bridging contacts 4 and 5 and connects all the turns of the winding in the circuit. As the bridging contact moves across, it takes out one additional section for each position until, at the other end of the range, it bridges contacts 2 and 7 leaving the minimum number of turns in circuit. By alternately switching out sections on each side of the winding break the winding unbalance and consequent short-circuit forces are minimised.

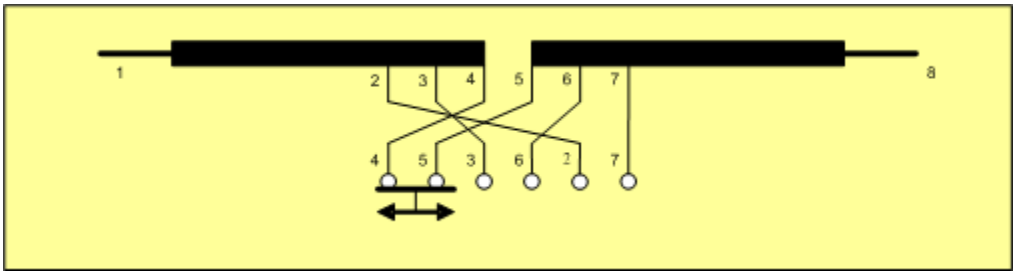

Figure 1 — Off-circuit tap-changer – linear type

Tap selectors for higher currents or voltages or more positions are usually of the rotary type with the fixed contacts arranged in a circle. The selector may be operated by a hand wheel with a spring action to ensure that it is always on a valid tap. Alternatively, the tap changer may be driven by a motor; this is similar to the arrangement used for on-load tap-changers.

There is usually a mechanical tap position indicator adjacent to the operating mechanism. The mechanism should include mechanical end stops to prevent operation of the tap-changer beyond either end position.

1.3.2 On-load tap-changers

On-load tap-changers are used to enable the transformation ratio to be varied while the transformer is energised and may be supplying power to loads connected to it. At the top end of the range, on-load tap-changers have a separate tap-selector and a diverter-switch for each phase. The diverter-switch is capable of switching rated load current at the "step voltage", that is the voltage between taps. It cannot switch fault current, so over-current blocking is provided to inhibit tap changing when the through current exceeds the rated switching current. The tap-selector is designed to carry, but not to make or break, rated load current.

There are two moving contacts per phase in the tap-selector, one to select the odd tap numbers, the other for selecting the even tap numbers as shown in Figure 2. Since the tap position number must be either odd or even, only one of the moving contacts carries current at a time, except during a tap change. The sequence of operation is that first the non-current-carrying selector moves to the next tap position if it is not already there. The diverter-switch moving contact is of the make-before-break kind. As it moves across to the other side it first switches in a transition resistor on the side that it was on, then switches in a transition resistor on the other side. For a brief moment, the two resistors are connected in series across one section winding between adjacent taps and carry a circulating current equal to the tap step voltage divided by twice the resistance. The resistors also momentarily carry the transformer load current, first all through one resistor, then half in each resistor, then all in the other resistor. Finally the diverter-switch moves forward and completes its operation by moving to the other side of the contact. Both resistors are

now out of circuit. At this stage the new tap selector contacts are carrying the load current and the tap change operation is complete.

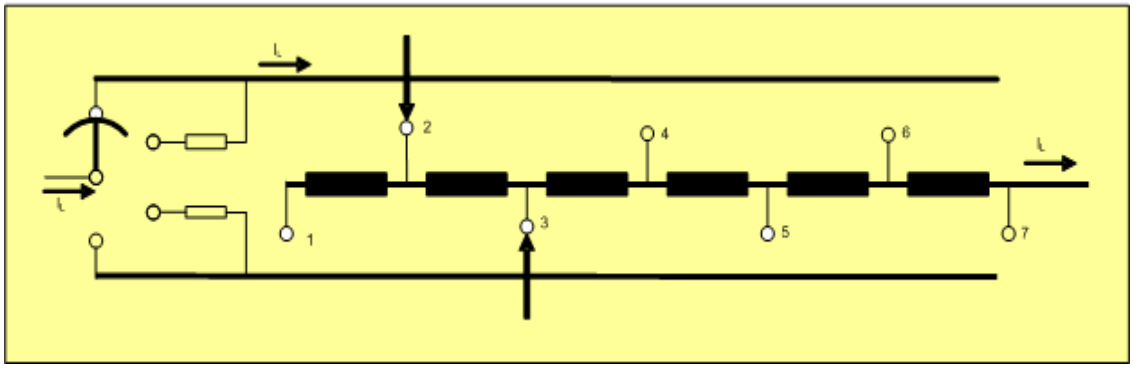

Figure 2 — On-load tap-changer with diverter switch and tap selector

On-load tap-changers for smaller rated power use selector switches which combine the functions of the diverter-switch and tap-selector. In the example shown in Figure 3, the switch is shown in the equilibrium position with the main moving contact carrying the load current. There are two make-before-break transition (switching) contacts, one on each side of the main contact. The tap change operation sequence is as follows. First, a transition contact moves to the next fixed contact. There is now a circulating current flowing through its transition resistor. Half way through the switching sequence the trailing transition contact has moved across to the previous fixed contact and the main moving contact is midway between fixed contacts. The circulating current has now dropped to half because there are now two resistors in series across the tap. However each transition contact is also carrying half the load current. Finally the main moving contact is on the next fixed contact and both transition contacts are out of circuit.

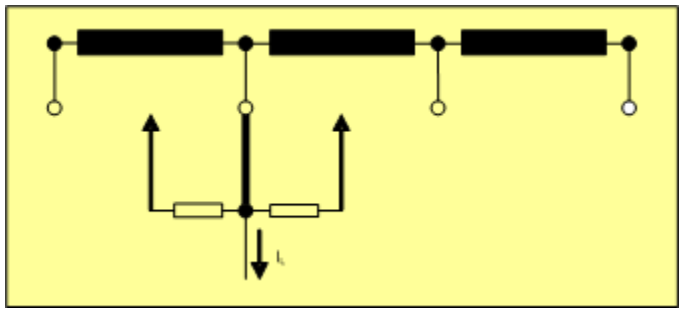

Figure 3 — On-load tap-changer with selector switch

In many tap-changers, a change-over selector is used with the tap selector or selector switch to enable its contacts and the connection taps to be used twice when moving from one extreme position to the next adjoining position. A coarse-fine change-over selector may be used to connect the “fine” (tapped) winding to either the “coarse” winding or the main winding. Alternatively a reversing change-over selector may be used to connect either end of the tapped winding to the main winding.

In the above examples the tap changers are known as “resistor type” because they use short-time rated transition resistors to carry the load current during the switching operation. In reactor type tap-changers, the transition impedance (reactor) is commonly called a preventive auto-transformer. Reactor type tap-changers normally use the bridging position as a service position (mid-point or centre tapped reactor tap-changers). This effectively doubles the number of tap positions available from a tap-changer for a given number of fixed contacts. The reactor is

therefore designed for continuous operation. The switching contacts are referred to as transfer contacts and are rated to make, break and carry (continuously) the rated current.

On-load tap-changers are fitted with motor drive mechanisms in cubicles, including electric motor and basic controls, removable crank for manual operation, interlocked with the electric motor, mechanical end stops and electrical limit switches to prevent operation of the tap-changer beyond either end position, mechanical tap position indicator, step-by-step circuit to prevent more than one tap step caused by continuous signals, and protection against running through in case of failure of step-by-step control circuit.

1.4 Types of faults in transformers and their frequency

Electrical utilities around the world collect data on faults experienced on their systems and other organizations collect and compile the data. One of the National organizations that collects data from utilities and compiles them on regular intervals is the Canadian Electrical Association. The summary of the statistics of outages of transformer banks from January 1, 1998 to December 31, 2002 is published in [1] and is reproduced here in Table 2, Table 3 and 0. Details of the outages by components are given in 7 Annex A: Transformer failure statistics.

Table 2— Transformer bank statistics for forced outages involving integral subcomponents

Voltage Classification	Component Years (a)	Number of Outages	Total Time (h)	Frequency per Year	Mean Duration
Up to 109 kV	3,019.5	168	82,898	0.0556	493.4
110 – 149 kV	9,302.0	542	144,547	0.0583	266.7
150 – 199 kV	594.0	88	49,529	0.1481	562.8
200 – 299 kV	5,940.0	310	88,284	0.0522	284.8
300 – 399 kV	1,771.0	133	21,340	0.0751	160.4
500 – 599 kV	1,044.0	21	13,946	0.0201	664.1
600 – 799 kV	2,539.0	72	22,131	0.0284	307.4

Table 3 — Transformer bank statistics for forced outages involving terminal equipment

Voltage Classification	Component Years (a)	Number of Outages	Total Time (h)	Frequency per Year	Mean Duration
Up to 109 kV	3,019.5	201	31,675	0.0666	157.6
110 – 149 kV	9,302.0	928	121,911	0.0998	131.4
150 – 199 kV	594.0	78	43,730	0.1313	560.6
200 – 299 kV	5,940.0	488	33,305	0.0822	68.2
300 – 399 kV	1,771.0	75	13,023	0.0423	173.6
500 – 599 kV	1,044.0	34	1,116	0.0326	32.8
600 – 799 kV	2,539.0	73	5,253	0.0288	72.0

Table 4 — Transformer bank statistics for forced outages involving integral subcomponents and terminal equipment

Voltage Classification	Component Years (a)	Number of Outages	Total Time (h)	Frequency per Year	Mean Duration
Up to 109 kV	3,019.5	369	114,573	0.1222	310.50
110 – 149 kV	9,302.0	1,470	266,458	0.1580	181.26
150 – 199 kV	594.0	166	93,259	0.2795	561.80
200 – 299 kV	5,940.0	798	121,589	0.1343	152.37
300 – 399 kV	1,771.0	208	34,363	0.1174	165.21
500 – 599 kV	1,044.0	55	15,062	0.0527	273.85
600 – 799 kV	2,539.0	145	27,384	0.0571	188.86

1.5 Main, second main and backup protection

Almost all major transformers are protected by two protection systems, such as two circulating current differential protection systems or one circulating current differential protection system and distance protection system. Both protection systems operate independently and ensure that the transformer is disconnected from the power system in the event of a fault in the transformer. These redundant systems are often referred to as Main-1, Main-2, System-1 and System-2 and System-A and System-B or a similar description for these primary protection systems. The advantage of using redundant protection systems is that the failure of one component of a protection system does not result in losing the ability of isolating the transformer if a fault occurs in the transformer protection zone.

Redundant CTs, circuit breaker trip coils, power circuit breakers, dc sources and/or other system components can be used to improve the reliability of the power system. The major purpose of using redundant components is to minimize the impact of single-component failures.

Backup protection is achieved by using different protection systems or functions, such as circulating differential protection for primary protection and overcurrent or directional overcurrent protection for backup protection. The backup protection system functions simultaneously with the primary protection system but its operation is delayed long enough to allow the primary protection to isolate the fault first. Backup system performs the tripping function only if the primary protection systems fail to isolate the faulted line.

Three scenarios are discussed in this section. They are protection for a network transformer, protection of a unit transformer and a distribution transformer.

1.6 Protective relays applied to a network transformer

Network transformers are key components in a transmission system and protecting them from major damage is very essential for maintaining continuity of supply. Figure 4 shows a single line diagram of a network transformer, CTs and protection systems that can be used. The systems selected for use in an application depend on the criticality of the transformer. It is assumed that the differential relay used in this case is an electromechanical device and therefore, the CTs on the load side are shown to be connected in delta configuration. If a solid-state or numerical

differential relay is used, the CTs on the load side will also be connected in wye configuration and the phase shift compensation will be done in the relay.

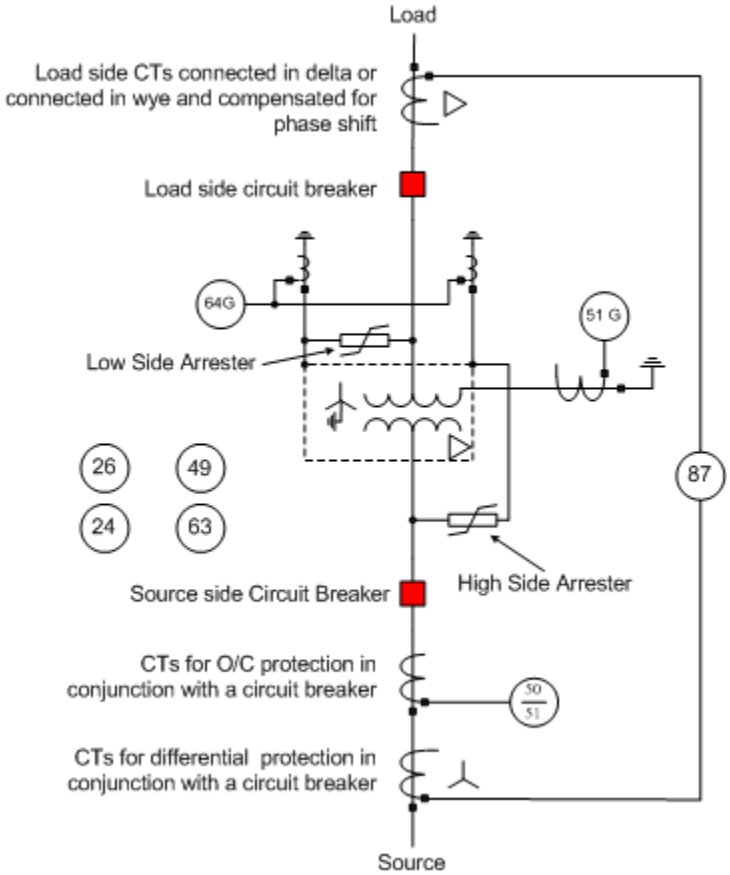

Figure 4 — Protection of a delta-wye transformer

The second main protection, in many situations, is provided by a second differential relay. One possibility is to use one electromechanical differential relay and one numerical differential relay as main and second main protections. Another option is to use two numerical relays from two different manufacturers.

Primary protection for the transformer is provided by the differential relay (87) and back up protection is provided by Buchholz (63), ground overcurrent current (51G) relays and, instantaneous and inverse time overcurrent relays (50/51). Additional protection is provided by V/Hz (24), the oil temperature relay (26) and hot-spot temperature relay (49). Another backup protection (second protection) can be provided by using two distance relays, one on the high voltage side and one on the low voltage side. Both relays look into the transformer and the circuit breakers are tripped only if both relays see a fault in the transformer zone.

It is important to realize that with the acceptance of numerical technology, multifunction transformer protection relays are used in many applications. A multifunction transformer protection relay would provide all the protection functions and, therefore, separate relays for different and other functions would not be needed. Two multifunction transformer protection relays can be used as main and second main protections and Buchholz relay and temperature relays would provide backup protection.

1.7 Protective relays applied to a unit transformer

Protection of unit transformers is very similar to that of network transformers when unit transformers are at major generating stations. A major difference is that a generator-transformer overall differential protection is also included as shown in Figure 5. Generator protection is not shown in this figure because it is out of the scope of this report.

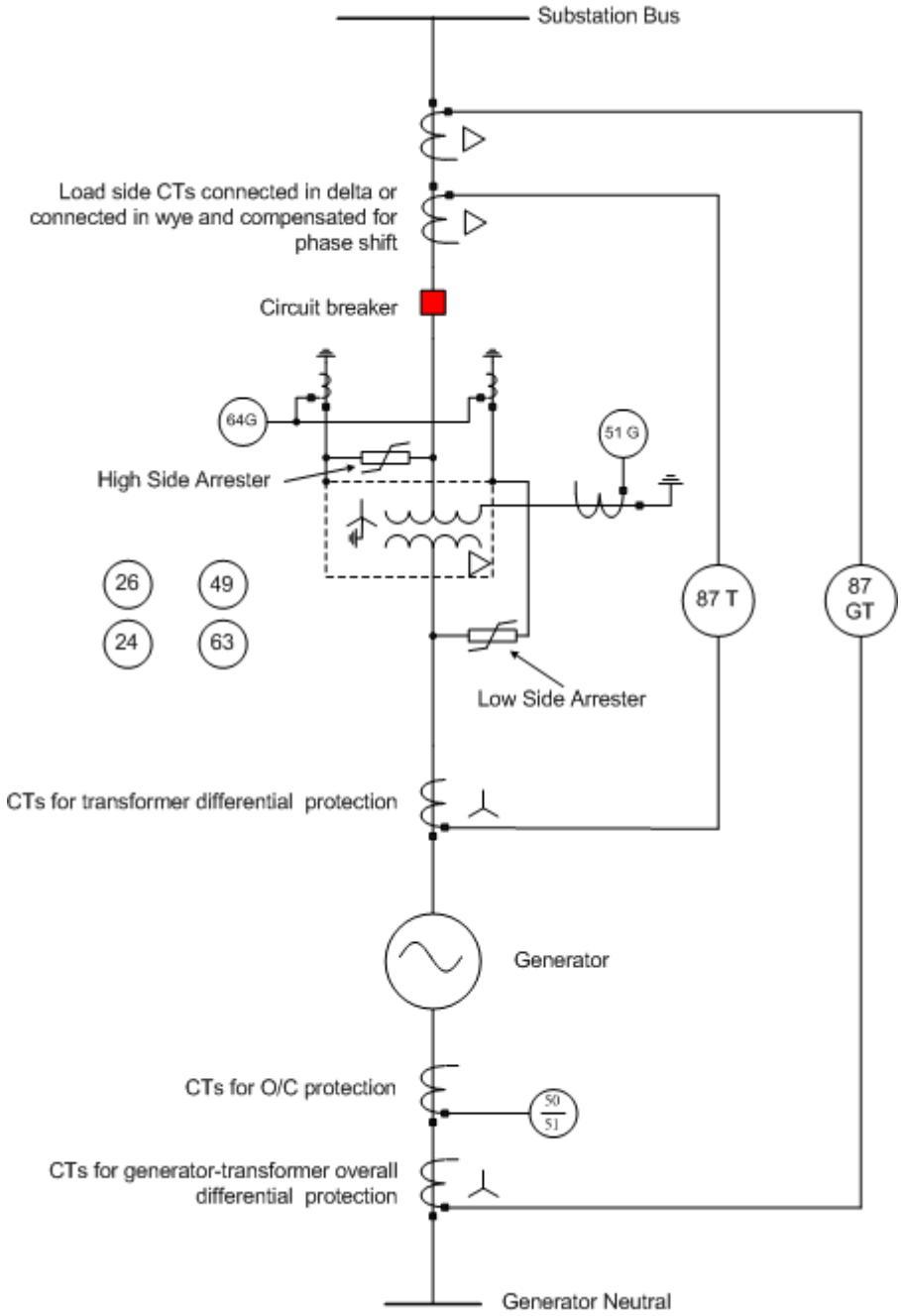

Figure 5 — Protection of a delta-wye unit transformer

1.8 Protective relays applied to autotransformers

Two-winding transformers allow power transfer between two transmission networks or a transmission network and a sub-transmission network while the two networks remain electrically isolated from each other. Autotransformers perform the same function except that they do not electrically isolate the two networks from each other. Autotransformers are less expensive than multi-winding transformers at transmission network voltages and are, therefore, used more frequently in power systems.

Erro! Fonte de referência não encontrada. shows a single line diagram of an autotransformer protected by two numerical multi-function relays.

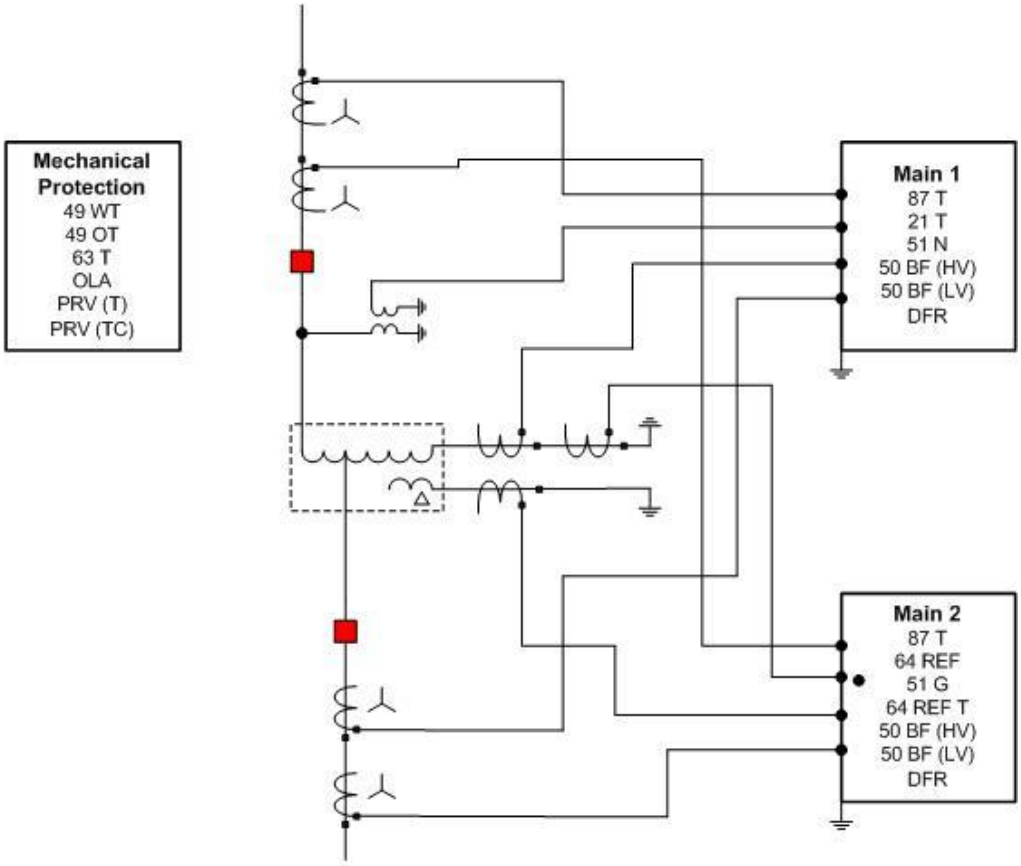

Legend

21 T	Transformer distance protection
49 OT	Oil temperature
49 WT	Winding temperature
50 BF	Breaker failure protection
51 G	Earth fault protection on the HV side
51 N	Earth fault protection on the LV side
63 T	Transformer Buchholz relay
63 TC	Tap changer Buchholz relay
64 REF	Restricted earth fault protection
87 T	Transformer differential protection (2 windings)
87 TC	Transformer differential protection with segregated measurement in the neutral
PRV (T)	Transformer pressure relief valve
PRV (TC)	Tap Changer pressure relief valve

Figure 6 — Protection of an autotransformer using two numerical relays

One numerical relays has been identified as Main 1 and the other identified as Main 2 in this figure. The protection and backup functions can be distributed among these relays in different combinations. One of the possible combinations is shown in this example. The following protection functions are activated in the Main 1 multifunction relay.

- Circulating current differential protection with phase segregated measurement of the current in the neutral.
- Distance protection
- Earth fault protection
- Breaker failure protection for the HV side
- Breaker failure protection for the LV side
- Fault data recorder

The following protection functions are included in Main 2 multifunction relay.

- Biased differential protection two windings type
- Restricted earth fault protection
- Earth fault protection on the HV side
- Restricted earth fault protection for the tertiary winding
- Breaker failure protection for the HV side
- Breaker failure protection for the LV side
- Fault data recorder

Many mechanical protection functions and alarms are provided on transformers. Out of all possible systems the following are listed in **Erro! Fonte de referência não encontrada.**.

- Buchholz relay
- High winding temperature
- High oil temperature
- Oil level alarm
- Pressure relief valve for the transformer
- Pressure relief valve for the tap changer

High impedance differential relays of electromechanical and solid-state type are historically used for differential protection of autotransformers. Numerical solutions are now being applied in modern relays. This function provides good sensitivity for ground faults and phase-to-phase faults in the common and serial windings but does not detect turn-to-turn faults in the tertiary windings.

Distance protection provides backup protection of the transformer (it also provides backup protection to the bus differential protection). The use of distance protection has the advantage over overcurrent protection in that it facilitates coordination with the distance protection systems provided on the lines emanating from the high-voltage and low-voltage buses to which the transformer is connected.

Earth fault protection function operated by the current in the neutral of the transformer is provided for backup protection for detecting ground faults in the transformer as well as in the network. The pickup of this function is normally set at low values and the time delay is normally set at large values. The sensitivity of this function for the ground faults on the high-voltage side can however be limited.

Protection for failure of HV as well as the LV circuit breakers is activated in both the Main 1 and Main 2 protection systems.

A two-winding biased differential protection provides transformer-differential-protection for phase-phase faults with possibility to detect some inter-turn faults but with limited sensitivity for ground faults. Two winding wye-wye transformers include a tertiary winding that is connected in delta configuration. This winding is not usually included in the protected zone if it is not connected to any load. A separate protection system should

A low impedance restricted earth fault protection with high sensitivity for ground faults complements the biased differential protection in Main 2.

A ground fault on the HV side of an auto transformer can theoretically (and in practice) result in no fault current in the neutral of the transformer. The magnitude of the earth fault current depends on the turns-ratio of the power transformer, the relative magnitude of the network source impedances and the transformer impedance. An earth fault relay measuring the residual current on the HV-side is therefore required to complement the earth fault protection based on the current in the transformer neutral.

The tertiary winding is protected by an overcurrent relay connected to a CT in the ground connection of one the terminals of the delta connected windings.

It is possible to divide the mechanical protection between Main 1 and Main 2 and route the trip commands through the numerical relays in this type of arrangement of multifunctional numerical relays. This facilitates the possibility to automatically benefit from the facilities of the numerical relays, such as disturbance recording, remote access, breaker failure protection initiation etc.

1.9 Protective relays applied to a distribution transformer

Protection of distribution transformers varies from the application of fuses to sophisticated systems like those used for network transformers. The selected protection depends on the size and criticality of the transformer. The protection of large transformers at distribution stations, such as 10 MVA, 66/11 kV transformers, would be similar to that described in Section 1.6 for the protection of network transformers. On the other hand, a 1 MVA 66/11 kV transformer may be protected by a fuse in each phase on the 66 kV side.

1.10 Fuse protection of transformers

Fuses are economical and require no maintenance. Neither the battery supply nor a relay building is needed. Fuses can reliably protect some power transformers against damage from primary and secondary external faults. They, however, provide limited protection for internal faults.

Primary fuses for power transformers are not applied for overload protection, their main purpose is to protect during faults. It should be recognized that, in the event of a fault, the blowing of one fuse on a three phase system may not de-energize the fault and the resulting single phase service may be detrimental to the poly-phase motors and other loads supplied by that transformer.

A typical situation that exhibits this protection shortfall is a distribution transformer whose primary winding is connected in delta and the secondary winding is connected in wye configuration with the neutral connected to ground. If a phase-to-phase-to-ground fault occurs on the secondary side between the transformer terminals and the low side circuit breaker, the fault is cleared by the high side fuses. The fuse in the phase in which the current is the highest will blow first leaving the transformer energized through the remaining two fuses. At this stage the secondary fault current is limited by twice the transformer impedance and, depending on the fuse size and, transformer and system-impedances, the remaining fuses may or may not blow. This condition may overload the transformer but severely overload the neutral. Table 5 shows the

magnitude of currents for a typical 66-11 kV, 4-MVA distribution-transformer before and after the first fuse clears. The table clearly shows that the current in the neutral connection remains essentially the same after the first fuse opens; this current will persist until the second fuse opens.

This example shows that the currents in two phases of the HV side a transformer can be identical whereas the current in the third phase is twice as much as the other two-phases. This would result in the fuse in one phase blowing whereas the fuses in the other two phases may not blow. This would result in reduced voltages on the low voltage side. It is also possible that the fuses in the phases in which the current magnitude is smaller might take more time to blow. The reduced voltage problem would last for a short time only.

Table 5— Current for a fault on the secondary terminals of a distribution transformer

Phase B-C-G fault before first fuse opens				Phase B-C-G fault after first fuse opens			
High-side		Low-side		High-side		Low-side	
Phase	Current (A)	Phase	Current (A)	Phase	Current (A)	Phase	Current (A)
A	202	A	0	A	110	A	0
B	202	B	2,100	B	110	B	1,145
C	338	C	2,100	C	0	C	1,145
		Neutral	2,290			Neutral	2,290

The selection of the fuse and proper current rating is usually based on the following factors.

(a) Fault interrupting capability of the fuse
(b) Maximum anticipated peak load and transformer through-fault current duration curve
(c) Hot load pickup and cold load pickup
(d) Primary system fault current and transformer impedance
(e) Coordination with source side protection equipment
(f) Coordination with low side protection equipment
(g) Maximum allowable fault time on the low side bus circuits
(h) Transformer connections and grounding impedance
(i) Transformer magnetizing inrush

Current rating selection is facilitated by data published by fuse manufacturers. Such data includes time current characteristic curves, ambient temperature, and preloading adjustment curves, plus daily and emergency peak loading tables.

2. Technologies used in designing protective relays

Advancements in generation, transmission and distribution since the late 1800's have been accompanied by the much-needed developments in power system instrumentation, control, protection and automation. The designs of relays used for protecting components of power systems have been based on electromagnetic, electromechanical, analog-electronic and digital-electronic technologies.

2.1 Fuses

The first protection device invented and used was the fuse. Fuses were originally introduced in the North American and European markets almost simultaneously in mid 1880's [2]. The objective was to protect lamps because, at that time, the cost of a lamp was approximately equal to two weeks' gross earnings of an average worker. Only about three years after their introduction in the market, fuses were applied to protect circuits.

An early fuse was a piece of wire held at its ends by screws. The quality control of fuse wires was not very effective and, therefore, those fuses did not blow at the intended loadings of the circuits. Moreover, there were no standards for fuses until BS88 was introduced in 1919. This standard defined the performance of fuses for currents up to 100 A and voltages not exceeding 250 V. Gradually, fuses with an insulated base and fuse carrier were introduced. A major development in this area was the introduction of high rupturing capacity (HRC) fuses [2] and [3]. Modern HRC fuses are rated to interrupt from a few amps to thousands of amps, and they are available in a variety of physical sizes and shapes. In addition to fuses for low voltage circuits, they are now available for use on high voltage lines.

2.2 Electromagnetic and electromechanical relays

A variety of electromagnetic and electromechanical relays were designed, manufactured and used as the power systems developed into complex networks. Most of these relays are the attracted-armature, balanced-beam, induction-disk, induction-cup, induction-loop and dynamometer types. Three designs that are amplitude comparators, phase comparators and induction drives became the backbone of protection systems. Three designs that were used in many applications (and continue to be used in several systems) are described in this section.

2.2.1 Amplitude comparators

The relays that compare the magnitude of an input with a set value or compare the magnitudes of two inputs are classified as amplitude comparators [4]. Two types of amplitude comparators often used are attracted armature relays and balanced beam relays; these designs are briefly described in this section.

2.2.1.1 Attracted-plunger relays

Many shapes and designs of attracted-plunger type relays were developed for use as instantaneous relays and switching relays [38]. They essentially consist of a solenoid that is connected to a current that represents the current flow in a circuit or voltage that represents the voltage at a bus as shown in Figure 7. The flow of current in the solenoid produces a magnetic field in the core resulting in magnetic flux in the air gap. A force directly proportional to the

square of the flux density and the cross-sectional area of the air gap and, inversely proportional to the length of the air gap is exerted on the plunger. The plunger moves up when the electro-magnetic force exceeds the force of the restraining spring that normally holds the plunger down. The air gap decreases as the plunger moves up and, consequently the force increases. The plungers were often applied as instantaneous relays including the detection of over- and under-current and, over- and under-voltage without intentional time delays.

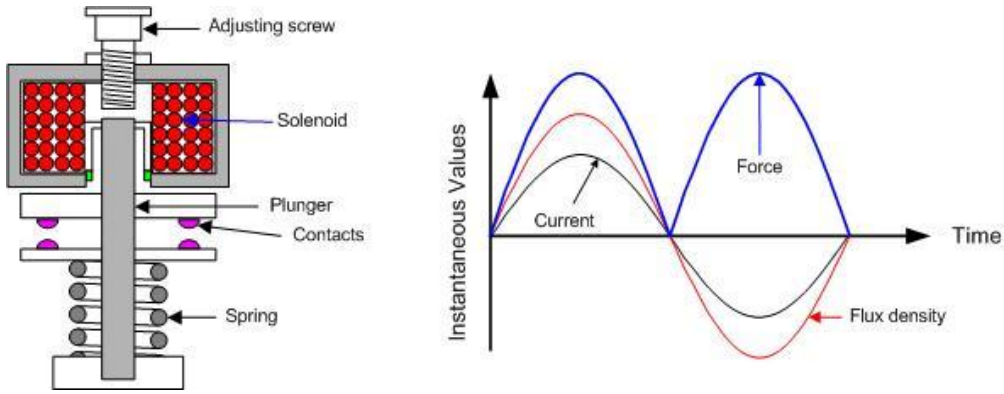

Figure 7 — An electromagnetic plunger

The force experienced by the plunger, as shown in Figure 7, is unidirectional but is zero twice in each period when ac current flows in the solenoid. This causes a plunger to try to drop out when the force is less than the tension of the spring. The plunge does not drop out because the time duration for this tendency is quite small at each such instance; instead it jitters and makes noise. The pole faces of the core were sometimes split and a shorted copper ring was placed on one part of each pole face. This caused the flux in the pole face part with the shading ring to lag the flux in the other part. The net effect achieved with this modification was that the force experienced by the plunger never goes to zero; consequently eliminating the tendency to reset and the jitter.

The instantaneous current and voltage relays are classified as amplitude comparators because they operate by comparing the magnitude of the force exerted by the electromagnet and the restraining spring.

2.2.1.2 Balanced-beam relays

Another form of amplitude comparators is the balanced-beam structure. In a single input balance beam relay, the electrical input is converted to a force by the electromagnet placed at one end of a beam. The spring, provided at the other end of the beam, exerts a force against which the force of the electromagnet is compared. The balanced beam overcurrent and over-voltage relays were designed to operate when the force exerted by the magnet exceeded the force of the spring. On the other hand, under-voltage balanced beam relays operated when the force exerted by the electromagnet became less than the force of the spring.

Balanced beam relays were also designed with two inputs, an operating signal that could be a current, voltage or a combination of current and voltage and a restraining signal that could also be a current voltage or a combination of current and voltage. A restraining spring is included so that the relay has an initial bias for stability reasons. A typical arrangement is shown in Figure 8.

The force produced by the operating signal is compared with the force produced by the restraining signal; when the force produced by the operating signal exceeds the force produced by the restraining signal, the beam tips and closes the trip (or control) circuit. These relays were designed to work as directional or distance relays by applying appropriate combinations of voltages and currents to them [39]. These are high-speed relays but their performance is

adversely affected when the operating and restraining inputs are out of phase with respect to each other; this becomes obvious if the waveforms, currents in the two coils and forces exerted by the two electromagnets are examined as is done in Figure 7.

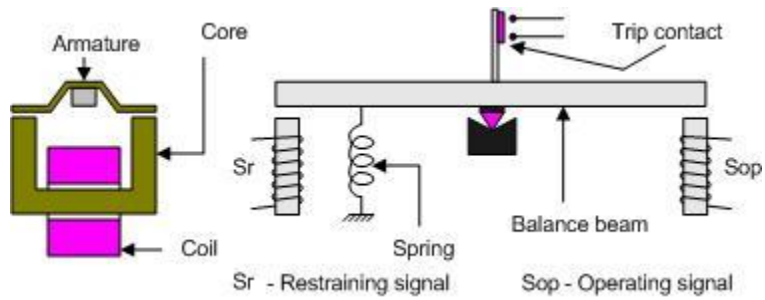

Figure 8 — A dual input balanced beam relay

2.2.2 Phase comparators

Electromechanical phase comparators were designed, manufactured and marketed before the term "phase comparator" was introduced. They were used as directional and distance relays.

2.2.2.1 Directional relays

A directional relay of this type operates when the phase displacement between the operating and polarizing signals is more than -90° but less than +90°. This is an instantaneous relay that closes its contact when the flow of apparent power is in the forward direction. These relays are usually used in conjunction with overcurrent relays that operate only if the directional relay operates.

Instead of using the voltage and current from the same phase, different combinations of voltages and currents were introduced. The most popular combination is called the 90° connection. The three pairs of voltages and currents used in this case are listed in Table 6.

Table 6— Operating and polarizing quantities of 90° connection-angle directional relay

Relay	Operating quantity	Polarizing quantity
1.	I_A	V_B-V_C
2.	I_B	V_C-V_A
3	I_C	V_A-V_B

The operating characteristic of "Relay 1", when the system is operating normally, is shown in Figure 9. The current I_A shown in this figure is at unity power factor and, therefore, in phase with the A-phase voltage. The torque developed by the relay is proportional to the voltage times the projection of the current on the maximum torque line. During normal load flows, the relay develops sufficient torque for directional discrimination. When an A-phase-to-ground fault is experienced, the voltages of B and C phases remain practically un-affected but the A-phase current lags from 60° to 85° from the unity power-factor reference. The relay, therefore, develops sufficient torque, operates and trips the faulted circuit.

Connection angles of 0°, 30° and 60° are also achieved by choosing combinations different than the combinations shown in Table 6. For example, a 30° connection uses I_A and V_A-V_C and their cyclic combinations.

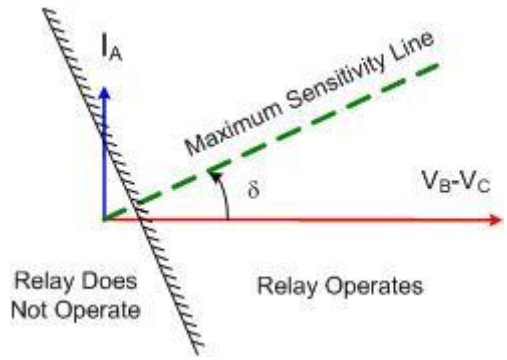

Figure 9 — Operating characteristic of a directional relay for detecting phase A-to-ground faults

2.2.2.2 Distance relays

Appropriate inputs are applied to a phase comparator so that it works as a distance relay. Selection of different combinations of inputs can make the comparator work as impedance, offset impedance, admittance, reactance, elliptical, peanut or lens characteristics. Another characteristic that was introduced when the solid-state (analog-electronic) relays were marketed is the quadrilateral characteristic. Admittance and quadrilateral relays are often used for transmission line protection; their operating characteristics plotted on the impedance plane are shown in Figure 10.

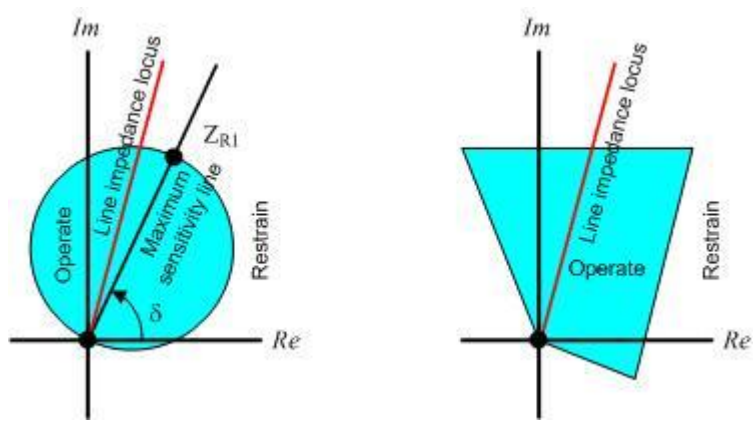

Figure 10 — Operating characteristics of admittance and quadrilateral relays

It can be shown that a phase comparator whose operating characteristic is defined by the following equation implements the admittance characteristic.

$$T = K_1 |V_1||V_2| \cos(\psi) - K_2 \qquad (1)$$

In this equation, K_1 is the relay constant and K_2 represents the torque of the restraining spring. Three relays are needed for detecting two-phase and two-phase-to-ground faults in this design. The signals applied to these relays are listed in Table 7. In addition to the relays for detecting two-phase faults, three relays are needed for detecting ground faults, one for faults on each of the three phases.

The cost of using seven distance relays for protecting a transmission line was substantial. Relays were, therefore, developed for application at the sub-transmission levels that consisted of one phase comparator for detecting all two-phase and two-phases to ground faults. Equation 2 defines the operating principle of such a relay.

Table 7 — Operating and polarizing quantities for an admittance relays

Relay	Operating quantity (V_2)	Polarizing quantity (V_1)
1.	$(I_A\text{-}I_B)Z_{R1}\text{-}(V_A\text{-}V_B)$	$V_A\text{-}V_B$
2.	$(I_B\text{-}I_C)Z_{R1}\text{-}(V_B\text{-}V_C)$	$V_B\text{-}V_C$
3	$(I_C\text{-}I_A)Z_{R1}\text{-}(V_C\text{-}V_A)$	$V_C\text{-}V_A$

$$T = K_1 |V_1||V_2| \sin(\psi) - K_2 \qquad (2)$$

where,

ψ Is the phase angle between V_1 and V_2

$$V_1 = (V_A - V_B) - Z_{R1}(I_A - I_B)$$

$$V_2 = (V_B - V_C) - Z_{R1}(I_B - I_C)$$

The phase comparators were implemented in two types of devices. The first type used wattmeter type electromechanical structures, which were slow in operating speed. The second type of structure was the induction-cup and, its variations, such as, induction loop. A two-input induction-cup device is shown in Figure 11. This is an ideal induction motor; its performance depends on the phase displacement between the fluxes produced by the currents flowing in the two solenoids. The performance characteristic of this device depends on the inputs applied to it. For example, when the inputs are those defined in Equation 1 and the design is appropriately adjusted, the admittance characteristic is achieved.

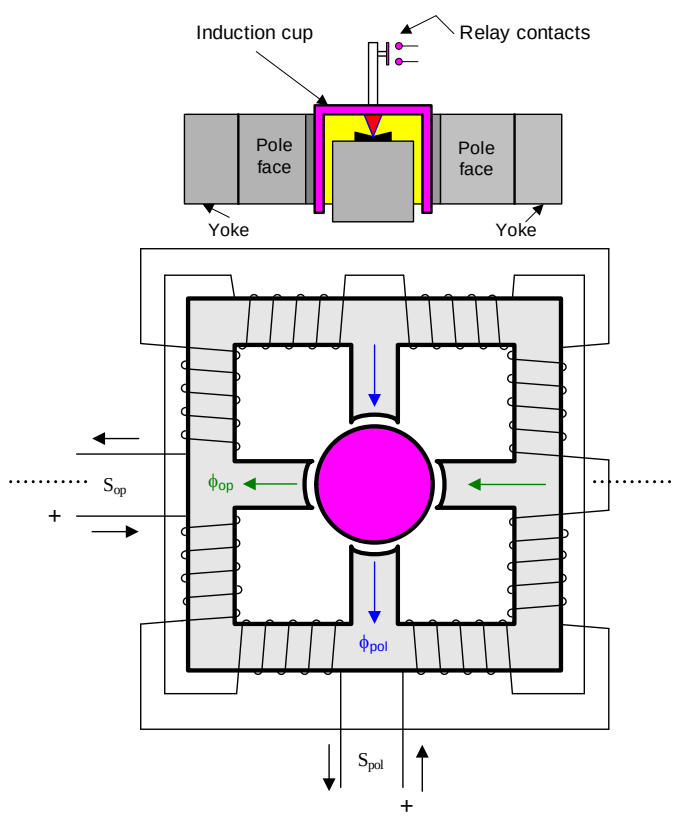

Figure 11 — An induction cup relay

2.2.2.3 A special case

One of the most commonly used devices in protecting power system components is the inverse-time overcurrent relay. Wattmeter type structure and its variations were designed to achieve the intended characteristic. While the input to a relay of this type is a current flowing in a phase of a circuit, its operation is more like a phase comparator. Each pole face of the electromagnet is split in two parts and a shorted ring is placed on one of the parts. The flux in the air gap opposite to the part of the pole face with the shorted ring lags the flux in the air gap opposite the other part of the pole face. Since these fluxes are phase displaced, a torque is experienced by the disc.

2.3 Solid-state relays

Analog electronic relays, called solid-state relays were introduced in late 1950's [5] and [6]. Discrete components that included resistors, inductors, capacitors and tubes were used in the designs. The relays based on this technology were not accepted by the industry because the mean-time between failures was small and it was necessary to replace the tubes quite frequently. Moreover, most designs were based on the assumption that the inputs were signals of the fundamental frequency at which the power system was expected to operate. Later, when transistors were invented, relay designers used them in devices manufactured with discrete components.

A major advance took place when the integrated circuit technology was introduced and operational amplifiers became available at reasonable cost. Several functional devices such as, amplification of specific gain, summers, buffers / voltage followers, integrators, differentiators, level detectors, waveform zero crossing detectors, lowpass and high-pass filters, amplitude comparators were developed using the operational amplifiers, resistors and capacitors.

An operational amplifier is usually drawn as a triangle; two terminals are drawn to connect inputs and one terminal to provide an output. This electronic circuit is driven by a dc voltage. It is reasonable to assume that an ideal operational amplifier has infinite input resistance (practically about 1 MΩ), infinite gain (practically about 100,000), and zero output resistance (practically a few ohms). It can also be assumed that the two input terminals are at approximately the same potential. When these assumptions are used, designing operational amplifier circuits becomes a straightforward task.

2.3.1 Level reduction of voltage

Electromagnetic and electromechanical relays were designed to withstand 220 V for short durations of time. This translates to the range of ± 311 V (peak to peak range of the input waveform). Electronic components cannot withstand these voltages. The inputs from the VTs are reduced, therefore, by auxiliary VTs to levels appropriate for the electronic circuits. If the electronics can withstand ± 10 V, auxiliary VTs with turns-ratio of 3110 to 10 can be used. Figure 12 (a) shows a circuit that is suitable for this purpose. Also notice that an MOV is used to keep the transients from reaching the electronic circuits.

2.3.2 Level reduction of current and conversion to equivalent voltage

Relays designed for the electromechanical and electro-magnetic technologies are rated to receive currents up to 150 A for short durations of time. This translates to ± 212 A (peak to peak values of the input waveform). All current waveforms must be converted to equivalent voltages that electronic circuit may process. Figure 12 (b) shows a circuit that can be used for this purpose. If the electronic circuit can withstand ±10 V and the precision resistor is rated 10 Ω, the current in

the resistor must be limited to ±1 A (peak to peak value). Auxiliary CT of turns ratio of 10 to 2120 can be used in this case.

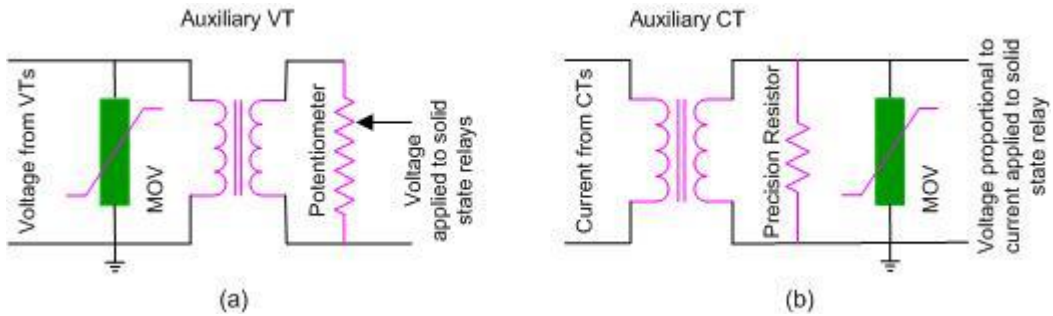

Figure 12 — A basic voltage reduction circuit and a current to voltage converter circuit for use with electronic relays

2.3.3 Lowpass filters

The low-level signals (voltages and voltages equivalent to currents) are applied to lowpass filters. They effectively suppress harmonic components of voltages and currents produced in power systems due to non-linearities of the components. They also suppress high-frequency components produced by voltage and current waves that emanate from a fault and travel in the system and are reflected at discontinuities in the system.

2.3.4 Solid-state amplitude comparators

Amplitude comparator relays were implemented by using such devices. A reference voltage is applied to one input terminal and the operating voltage is applied to the second input terminal of an operational amplifier.

2.3.5 Solid-state phase comparators

Several designs of phase comparators were developed. It is possible to use analog electronic technology to implement Equation 1 that may be written in the following form.

$$-90^{\circ} < \Psi < +90^{\circ} \qquad (3)$$

One implementation consists of phase shifting the operating signal by 90° and then detecting the positive and negative going zero crossings of the phase-shifted signal. A circuit that can be used to detect the positive going zero crossings of a waveform is shown in Figure 13. The operational amplifier saturates and provides a rectangular waveform as output. A zener diode reduces the level of the rectangular waveform and removes the negative half cycles of the waveform. The R-C series circuit ensures that pulses are generated at the front and back ends of each half-cycle of the rectangular waves. The diode at the output terminal ensures that the sequence of pulses at the output represent the instants of the positive going zero crossings only.

The polarizing signal is applied to a half-wave squaring circuit. The pulses from the zero-crossing detector and the output of the squaring circuit are applied to an AND gate. The coincidence of the positive going zero crossings of the phase-shifted operating signal and the appropriate half cycle of the polarizing signal generates an output from the AND gate. A level detector is used to avoid tripping on noise in the circuit. If the level detector indicates an output, a trip command is generated. The logic shown in Fig. 8 summarizes this procedure.

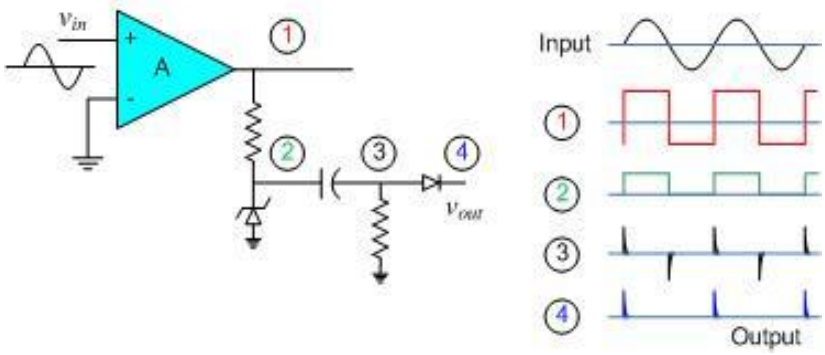

Figure 13 — A circuit for detecting positive going zero crossing of a waveform

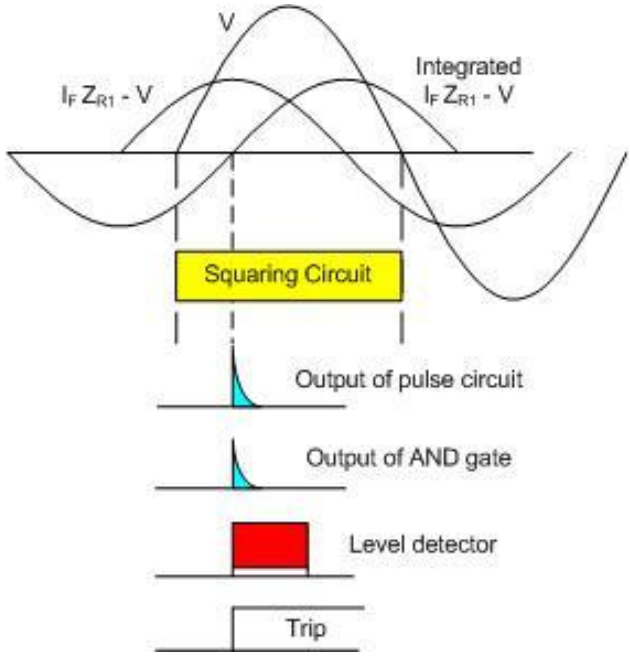

Figure 14 — Phase comparator implementation logic

2.4 Numerical relays

It was suggested in mid 1960's that computers could be used to protect components of power systems [40]. This was followed by a comprehensive description of the approach that could be used to protect all circuits of a substation by using a single computer [41]. This reference is remarkably complete in addressing the issues and presenting important concepts on protecting all components of a substation and the line emanating from it. While the concept of using a single computer has not been accepted by the industry for various reasons, the implementations in numerical relays are quite similar to the concepts presented in that paper. The early designs of relays, which were implemented on either control computers or mini-computers, were referred to as computer relays [42]. Later, relay designs based on 8-bit processors evolved [7]. The initial applications were in frequency relays for load shedding and overcurrent relays for protecting distribution circuits. At that stage, the relays were called microprocessor relays [9] and [43]. More recently, the relays that perform numerical calculations in the central processing units of their microprocessors are referred to as numerical relays.

2.4.1 Overall arrangement

Many designs of numerical relays have been developed since their introduction in the market. However, the basic arrangement in these designs can be divided in the functional blocks shown in Figure 15. The major subsystems are as follows.

- Analog input subsystem
- Digital input subsystem
- Analog-Digital interface subsystem
- Microprocessor
- ROM, RAM and Cache
- Digital output subsystem
- Communication subsystem
- Power supply

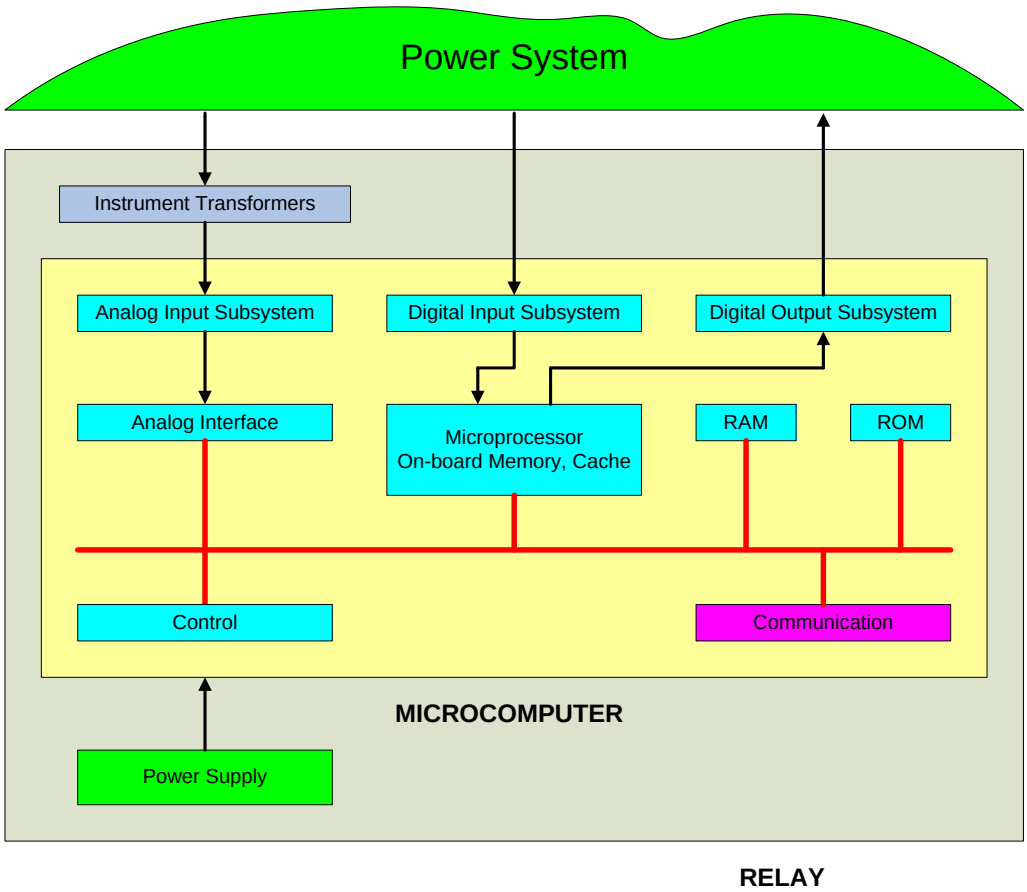

Figure 15 — A block diagram of a typical numerical relay

2.4.1.1 Analog input subsystem

The level of the power system voltages and currents are reduced from kV and kA levels to typically 110 V and 5 A or 240 V and 1 A. During system faults and major disturbances, currents

can reach values that are 40 to 45 times the nominal value. In addition, during switching of circuits, a voltage can be twice as large as the nominal value. While older integrated circuits could handle ±12 V, the newer circuits can handle only ±3 V. Moreover, electronic circuits can handle voltages only. Two actions are therefore taken; one action is that the levels of voltages and currents are reduced by using auxiliary transformers that are placed in the relay. The second action is that the currents are converted to voltages by applying them to precision resistors.

The low-level signals are applied to lowpass filters. There are two reasons for using these filters. The first reason is that the power system voltages and currents contain harmonics produced by the non-linearities of the components that form power systems. The second reason is that high frequency components are produced by voltage and current waves that emanate from a fault and travel on the lines to other locations. These waves are reflected at the discontinuities encountered at substations and loads. The sampling and processing of quantized data can make a high frequency component look like the fundamental frequency component of a signal. Active filters and, more recently, switched capacitor filters are being used in numerical relays.

2.4.1.2 Analog-digital interface

Analog to digital interface usually consists of a sample and hold circuit (S/H) for each input, an analog to digital (A/D) converter and a multiplexer. Because all inputs must be sampled simultaneously to avoid skewing, they are sampled on receiving a control signal from the microprocessor. The sampled analog levels are held by the S/H circuits. The A/D converter sequentially determines the numerical equivalent of each analog level and stores them in designated memory locations in the microprocessor.

The most commonly used A/D converters in power-system protection systems are of the successive approximation type. Some relays, however, use flash converters or pipeline structured flash converters. While delta-sigma A/D converters are being used in laboratories, they have not migrated to the commercial relays as yet.

Very early relays used 8-bit A/D converters. It was known that the resolution of the measurements obtained in this manner was not very good [47], cost considerations dictated their use. As the prices of A/D converters decreased, converters with higher number of bits were used. At this time, some relays use 12-bit converters while the others use 16-bit converters.

2.4.1.3 Microprocessors

Different types of microprocessors are being used in numerical relays. Some relays are designed with general-purpose processors whereas others are designed with Digital Signal Processors (DSP). Some high-end relays use a DSP for mathematical calculations and a general-purpose (or control processor) for performing control related functions.

The early designs of relays used microprocessors, like the Intel 8080 vintage [7], which operated with a 2-4 MHz clock and provided instruction cycles of 2 μs. Two different approaches were used by the manufacturers as the market of numerical relays developed further. One approach was to use one or more general purpose microprocessors. These processors performed all the numerical, control and communication functions. The second approach was to use digital signal processor for numerical calculations and use a general purpose processor for communications and control functions.

The word size of early processors was 8-bits. Many calculations were performed in double precision and quad-precision. This increased the time needed to perform calculations. But as the technology advanced, sixteen bit processors became available at reasonable cost; they were

incorporated in relay designs. Originally, fixed point DSPs were used for cost reasons. As the prices of DSPs decreased, relay designs migrated to floating point processors.

On the one hand, currently marketed relays use high end general-purpose processors that have word sizes of 32 bits and clock rates of more than 3 GHz. On the other hand, some relays are designed with high end floating point DSPs operating at more than 200 MHz and ability to perform more than one instruction in each clock cycle. They include the facilities for placing the frequently used code in the on-chip cache and other facilities, such as hardware adder, multiplier, arithmetic logic unit, and direct memory access.

2.4.1.4 Other subsystems

The digital input subsystem receives information on the status of circuit breakers and isolators from the power system. The digital output block sends a control command on a line to open a circuit breaker or operate a control relay.

2.4.2 Numerical processing of acquired data representing voltage and current waveforms

Relaying programs use quantized data provided by the A/D converters to determine if the protected circuit is experiencing a fault or not. A key part of these programs is the algorithm; these algorithms can be divided into the following categories.

- Phasor determining algorithms, such as Trigonometric, Discrete Fourier, Least Squares and Kalman filtering techniques
- Modelling algorithms that compare the performance of a circuit with the performance of the model of the circuit, such as, a line model or a transformer model
- Other algorithms, such as, Neural Networks, Travelling waves, Pattern Recognition, Wavelet Transform and Mathematical Morphology techniques

The phasor-based algorithms convert a sequence of quantized values of an input to a phasor that represents the component of a selected frequency present in that input. For example, the phasors of the fundamental frequency components of currents in a line and voltages at the line terminal are calculated for distance, directional and differential protection of transmission lines. Most relays designed for protecting electrical circuits use the Discrete Fourier Transform (DFT) algorithm. The phasor calculation stabilizes in a little less than one period of the fundamental frequency. Relays that use this algorithm usually take a little more than one period of the fundamental frequency to arrive at acceptable decisions. Voltages provided by a CVTs contains a sub-harmonic component and it takes the DFT algorithm approximately two periods of the fundamental frequency for getting a stable phasor estimate in the presence of the sub-harmonic components.

Recent high-end relays use multiple algorithms, a Least Squares (LS) algorithm for accelerated tripping in the event of close-in faults and the DFT algorithm for other faults. One advantage of the LS algorithm [13] is that it can be designed in such a manner that the presence of decaying dc components in currents and voltages would not adversely affect the calculated values of the phasors.

The modelling algorithms are able to detect faults in substantially less than one period of the fundamental frequency but the results are usually quite noisy [44]. Some form of post analysis filtering of the results, therefore becomes necessary. The advantage is that the operating speed is, in this manner, substantially reduced [20].

The neural net and other such algorithms have not been accepted by the industry for two reasons. The algorithms that use artificial intelligence techniques are based on a priori training and, in the event of incorrect operation or failure to operate, the results cannot be rationalized easily. Second reason is that most relays using these techniques are required to be trained for application at specific locations in a power system.

2.4.3 Other functions

In addition to performing the protection functions assigned to relays, numerical relays do a lot more. Some of the additional functions that are performed now and the functions that can be performed by numerical relays include the following.

— **Save quantized data from faults and disturbances:** Numerical relays save data; this allows the relay engineer to reconstruct the waveforms of voltages and currents for visual examination and investigation of the relay performance.

— **Adaptive protection:** Numerical relays can be designed to include abilities for changing their settings automatically so that they remain attuned to the system operating state as it changes [8]. Some of the functions that can be made adaptive are as follows.

- Using the most appropriate algorithm during a disturbance
- Changing settings of relays of a distribution network as the system loads or configuration change
- Changing the settings of second and third zone distance relays as the system operating state changes
- Compensating for the CT and VT errors
- Changing the allowable overload of circuits and equipment as the ambient conditions, especially the temperature, change
- Changing the circuit auto-reclosers delays to ensure that the circuit is reclosed after the arc is extinguished

— **Communication:** The digital electronics technology is naturally suited for use in numerical relays for communicating with other relays and with substation and central control computers. The additional cost is marginal and the benefits of the additional capabilities far exceed the cost. Most numerical relays now include facilities that allow them to exchange information with other relays, measuring instruments and, substation and central control computers [9].

One of the problems with the communication facilities is that different protocols were used previously in different parts of the world. The Utility Communication Architecture (UCA) Group started, in mid 1990's, to work on developing a North American communication standard for use in protection, automation and control applications. IEEE later joined the activity and provided sponsorship. At about the same time, IEC started working on developing a communication standard for use in protection and automation. The two activities were consolidated in 1998 and it was agreed that the standard be developed as an IEC document. This activity finally resulted in the publication of the IEC 61850 Standard that is now being used by relay and IED manufacturers all over the world. The use of this standard has made it possible for devices installed in a substation, but provided by different manufacturers, to communicate with each other without the use of special purpose software for facilitating communications between devices designed by

different manufacturers. This is a great feature for facilitating substation automation and control.

— **Non conventional instrument transformers:** Modern developments in fiber-optics technology and advancements in the associated electronic devices have resulted in the development of unconventional instrument transformers. One of the unconventional current transformer designs takes advantage of the Faraday Effect [45]. The basic approach is that two linearly polarized beams are generated and are applied to a fiber optic that takes them to the conductor level. The linearly polarized beams are converted to circular polarized beams, one to a left circular polarization beam and the other to a right polarized beam. The fibre optic takes the circular polarized beams around the conductor several times. As the beams travel through the magnetic field produced by the current, one of the beams is accelerated and other is decelerated; the acceleration and deceleration depend on the intensity of the magnetic field. The circular polarized beams are converted back to linear polarized beams and are sent back to the sensing equipment at the ground level. The change of phase between the beams are measured and then translated to the level of current in the conductor.

One of the unconventional electro-optic voltage transformer uses the Pockels cells. The basic principle is that when a circular polarized beam passes through the cell, the polarization changes to elliptical polarization. The change of polarization depends on the intensity of the electric field in which the Pockels cell is placed.

One of the major advantages of numerical technology is that the space needed for protection system is much less than the space taken by the electromechanical and solid-state technologies. Figure 16 shows the extent of the savings in space and, consequently, the real estate needed to house the protection and control equipment.

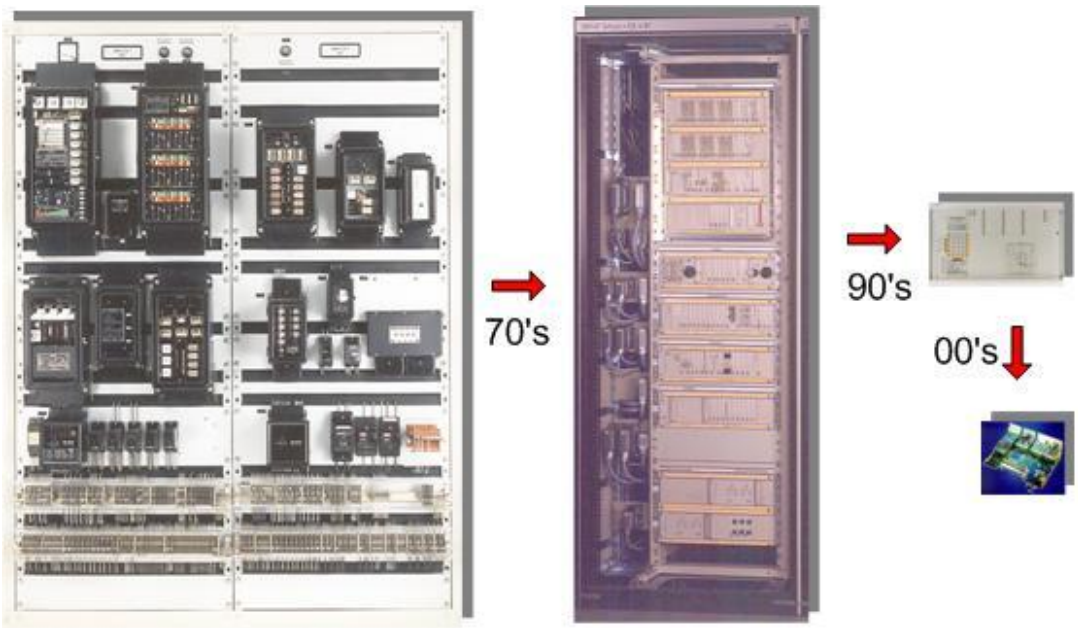

Figure 16 — Physical space used by a line protection system in different technologies

(Courtesy: Gerhard Ziegler of Siemens AG, Germany)

3. Protection of network transformers

Different types of protective relays are used for protecting network transformers. For example, overcurrent relays are used to protect transformers from sustained overloads that might cause damage due to excessive heating. Differential relays are used for detecting winding faults and isolate the transformer before the damage spreads. Other protection systems used to protect a transformer include, restricted earth fault protection, distance protection, over-fluxing protection, negative sequence and zero sequence current and voltage protection, and earth fault protection. The application of these protections is described in this section.

3.1 Differential protection

3.1.1 Basic principle and the problems at hand

The basic principle of differential protection is based on the comparison of currents. According to the Kirchhoff's current law, the sum of all the currents flowing to a node is zero; similarly, the sum of all the currents flowing into an apparatus, such as a transformer or generator, is zero except when there is a fault in the apparatus. Current flows in the differential relay when there is a fault in the protection zone of a transformer but no current flows in the relay when there is a fault outside the protection zone of a transformer are shown in Figure 17.

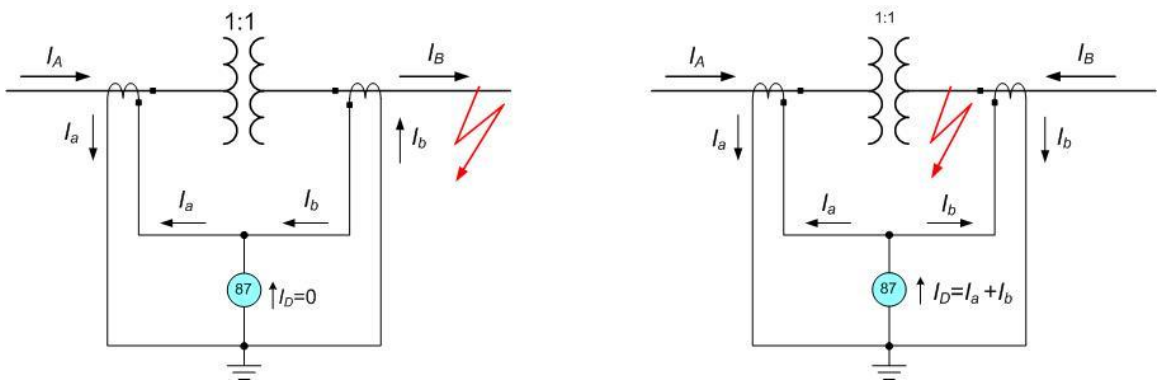

Figure 17 — Basic principle of differential protection

Three types of situations are experienced by a transformer during operation. The first situation is that the transformer is operating normally and is supplying load. The second possibility is that there is a fault outside the protection zone of the transformer. Currents I_a and I_b are equal and, therefore, the differential current I_d is zero. The third possibility is that there is a fault in the protection zone of the transformer. Currents I_a and I_b are not equally and are usually out of phase. The difference of the two currents, I_d, flows in the relay. The amount of difference current depends on the fault resistance and the infeed from one or both terminals of the transformer.

Additional aspects are taken into account during the application of transformer differential protection because the Kirchhoff's current law is not satisfied during certain operating conditions. This is discussed later in this report.

3.1.1.1 CT ratio mismatch

The rated current of each winding of the transformer determines the selection of the rated primary current of the current transformers (CT) used for protection, control, monitoring and metering.

The currents provided by the CTs installed at the two terminals of the transformer should be identical when the transformer is supplying load or when there is a fault outside the protection zone of the transformer. Mismatches usually occur in practical applications as is shown in the example in 3.1.1.10 CT matching and 9.1.2.1 Selecting ratios for CTs on the HV and LV sides even when there is no fault in the transformer protection zone.

3.1.1.2 Different transient response of CTs

A transformer is usually connected to two parts of a power system that operate at different nominal voltages. The CTs designed for use on systems operating at different voltages do not have identical magnetizing characteristics and transient responses. The two factors that result in these mismatches are the design of the CT and the influence of the CT burden on its performance. A difference current is possible, and is usually experienced due to non-linearities of devices and circuits when an external short circuit occurs. The mismatch of CT performance is shown in Figure 18. The currents provided to the differential relay by the CTs during an external fault are shown in Figure 19.

Figure 18 shows that the large magnitudes of the steady state short-circuit currents result in substantial difference currents. The difference between the currents of the two CTs depends on the difference in the slope of the CT characteristics at low levels of primary currents shown in part A of the figure and the resulting error is small. One CT saturates to levels represented in part B of the figure as the primary current increases while the other CT does not saturate. This results in an increase of the difference current. Both CTs saturate as the current increases further as shown in part C of the figure. The difference current now is substantial. One way to manage this difference in the performance of the CTs is to include a restraint characteristic.

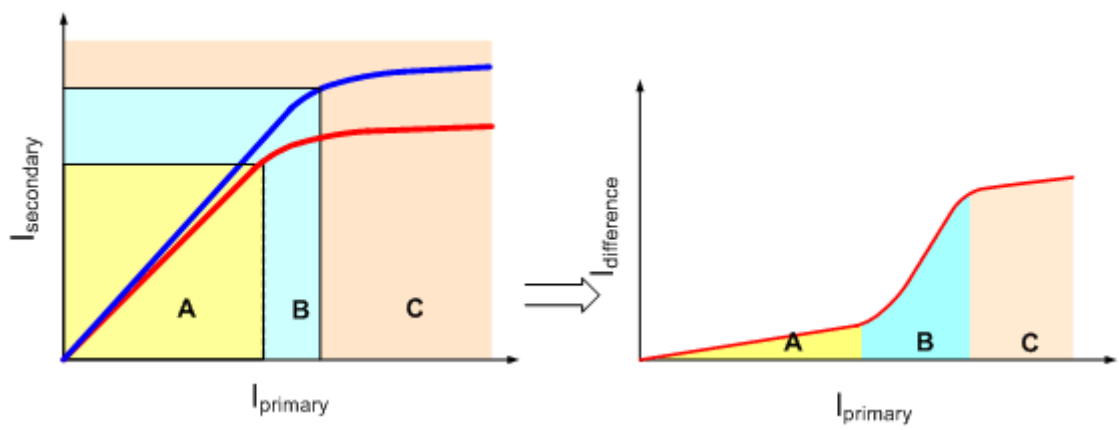

Figure 18 — The CT performance for normal load and excessive primary currents

The situation becomes much more critical if the short-circuit currents include dc offsets. Increased differential current and reduced restrained current appear due to CT saturation as shown in Figure 19. The restraint characteristic does not help and, therefore, a special saturation detection function is needed.

Another critical case is the internal fault close to the CTs especially when the fault currents include dc offsets. A CT saturates a few milliseconds after the occurrence of the fault if the CT is inadequately designed and is receiving current from a strong source. The differential current rapidly reduces from large magnitude to small magnitudes resulting in the relay not operating as is shown in Figure 20. To deal with this problem, a very fast instantaneous overcurrent relay is required.

3.1.1.3 Transformers with tap changers

The transformer ratio changes when the tap of a transformer is changed. If the tap changer is in the transformer protection zone, the mismatching of the CT's increases and leads to additional current difference. Depending on the tap changer design (application for a phase angle regulation) an additional phase shift in the current of the tap changer side is possible. This effect should be taken into account while setting the restraint characteristic. Otherwise, the actual transformation ratio should be determined and measured currents should be modified accordingly.

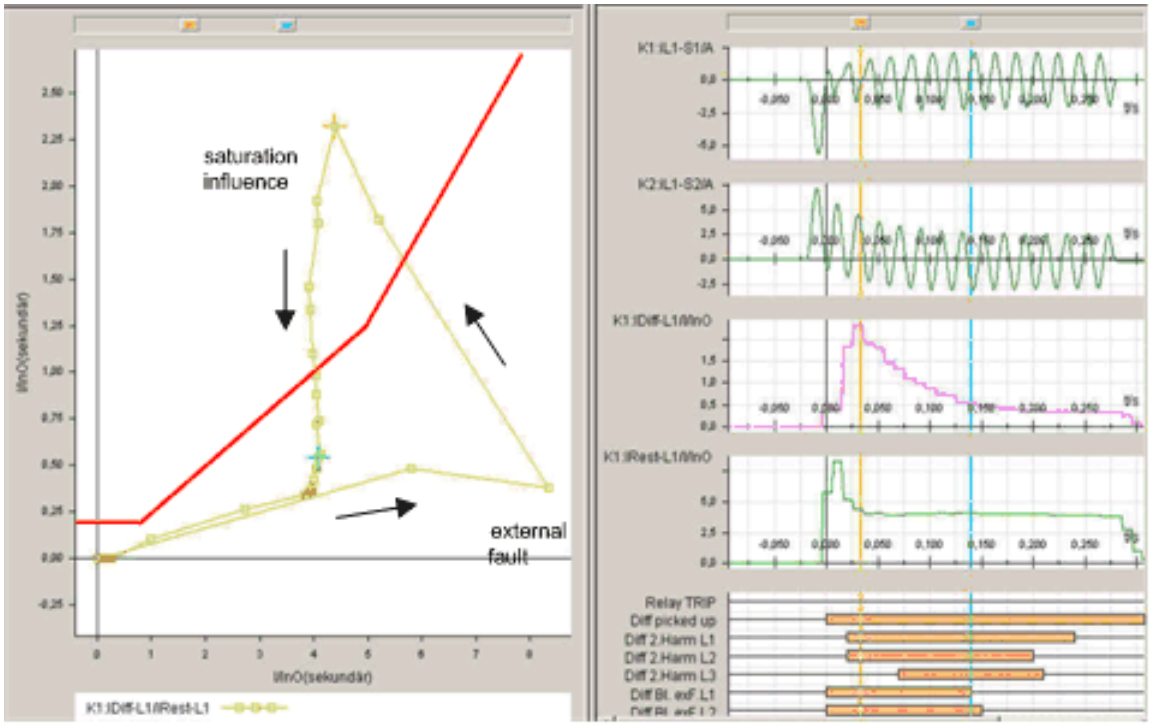

Figure 19 — Fault currents with DC offset during an external fault and trajectory of the operating current as a function of time

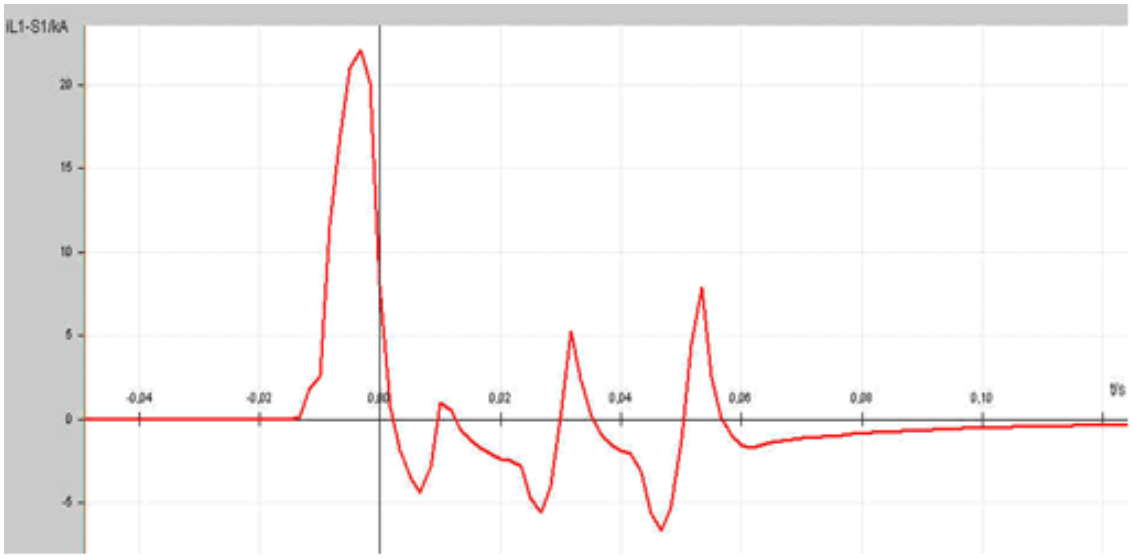

Figure 20 — A saturated CT during an internal fault

3.1.1.4 Transformer vector group

When differential protection is applied to a transformer with a delta or zigzag connected winding a phase shift between the primary and secondary currents result. As shown in Figure 21, the difference current can be as large as the fault current

For defining the phase shift, the high voltage side (side 1) is considered as the reference side. As shown in Figure 21, the phase shift for this YNd5 transformer is 5*30° = 150°. This means that the currents on the low voltage side lag 150° compared to the currents on the high voltage side.

In case of Wye-Delta vector group connected transformers or transformers with earthed star points handling of the zero sequence current is very important. Otherwise the risk of a trip during single phase failure is possible. More details are given in 3.1.1.8 Numerical design issues and 3.1.1.15 Application notes.

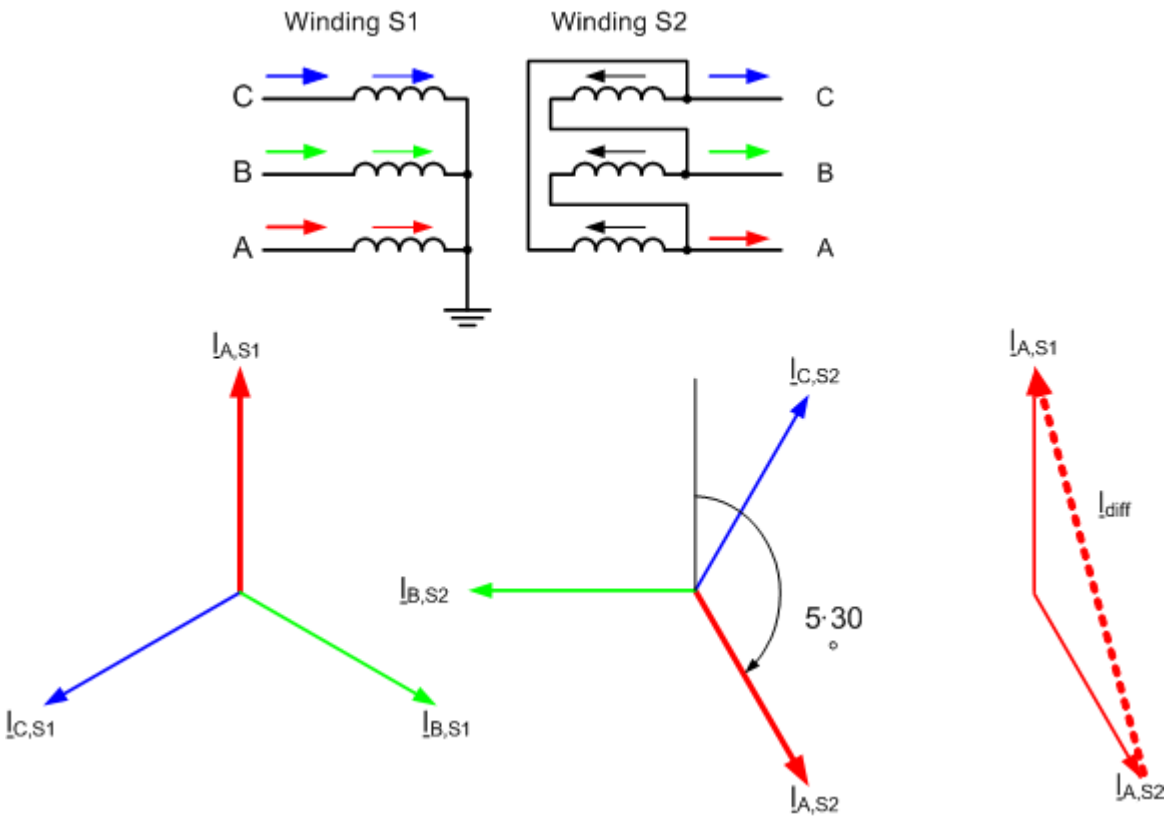

Figure 21 — Magnetizing current of a three phase transformer

3.1.1.5 Excitation current of the transformer

The electromagnetic transformation between two voltages uses excitation current, also called no-load magnetizing current. This current is normally very small (less than 0.25 % of rated transformer current). The impact of this current on the differential current is low but should be taken into account while determining the pickup setting of a differential relay.

3.1.1.6 Overexcitation of a transformer

If the voltage at the terminals of a transformer is higher than the rated voltage, increased magnetizing current flows in the transformer due to the non linearity of the core. This causes the

differential current to increase and there is a possibility that the differential relay would operate and isolate the transformer from the system. Figure 22 shows this effect in addition to an example of the dominant harmonics during over-excitation. The curve I_{50}/I_{NTr} is the differential current. At 125% of rated voltage, the differential current is equal to the assumed pickup threshold of 15%. At a voltage of 140%, the differential current is more than 50% of the rated transformer current. The 5th harmonic in the differential current is also influenced by voltage rise. This component increases to about 60% at 115% voltage and decreases gradually as the voltage increases further. The maximum possible voltage determines the threshold of 5th harmonic component used for blocking differential relays. It is usual to use a setting of 30% if fifth harmonic is used for blocking the differential relay during an over-excitation incident.

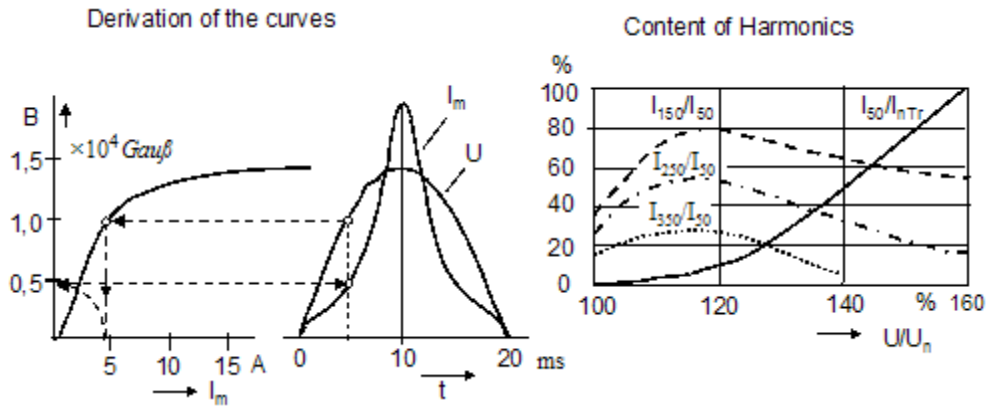

Figure 22 — Magnetizing current during transformer over-excitation

3.1.1.7 Inrush current

Inrush current occurs when a transformer is energized; the magnitude of the current depends on the instant at which the transformer is energized. Because $d\Psi/dt$ is proportional to instantaneous value of voltage *v*, a transient build up of flux starts. The flux in the transformer core builds to levels proportional to the integration of the voltage. Current flows in the transformer winding to match the flux. The current is not directly proportional to the flux because the magnetizing characteristic of the core is not linear over the entire range of flux experienced during this process. The inrush current is dominant in the phase whose voltage is close to zero when the transformer is switched on.

Because the inrush current flows in the winding that is connected to the source while the currents in the other windings are either zero or are equal to load currents, large differential current flow in the protection circuits. A typical curve of a real transformer inrush current is shown in Figure 23.

The peak of the inrush current and the time constant of its decay depend on the size of the transformer. Figure 24 gives a representative overview of these parameters as a function of the rating of the transformer.

3.1.1.8 Numerical design issues

In most realizations in numerical relays, a current flowing into a node is defined to be positive and the change of phase angle in the current due to the vector group of the transformer is taken into account in the software.

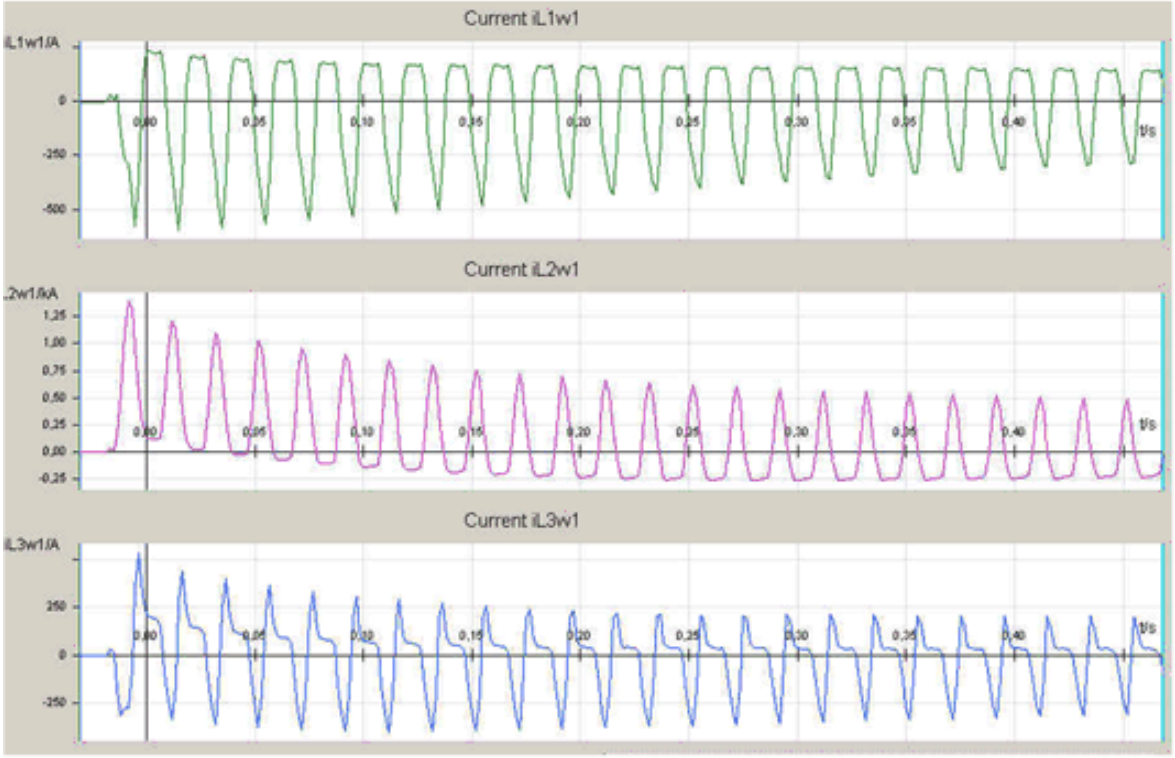

Figure 23 — Magnetizing currents in a three phase transformer

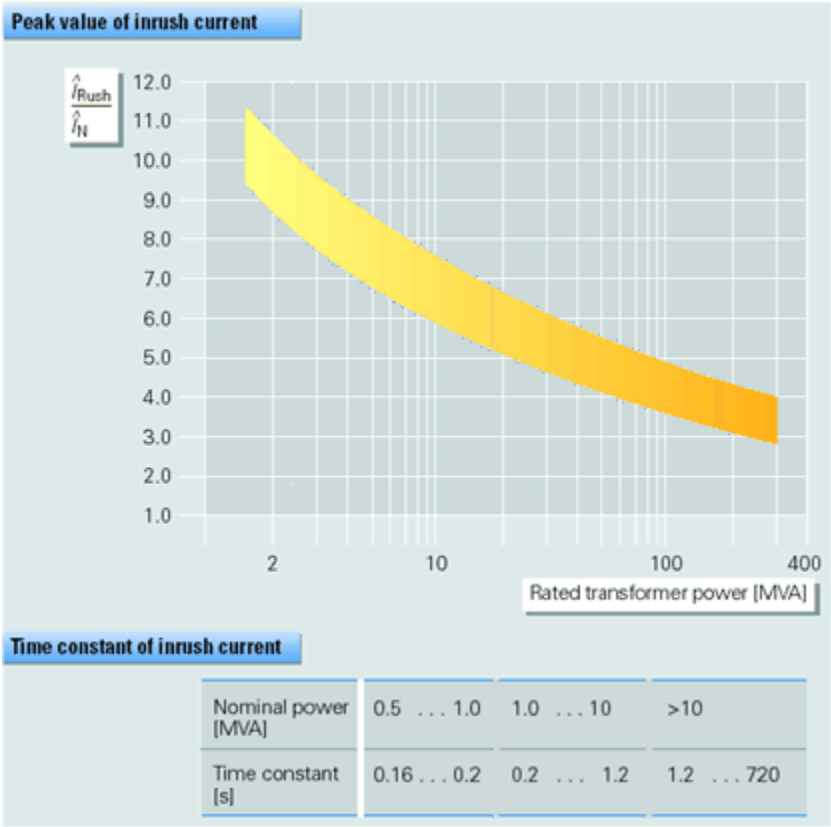

Figure 24 — Range of magnetizing inrush currents and their decay time constants

3.1.1.9 CT connections

A change of practice with the use of numerical relays has occurred. The CT's are connected directly to the relays without using auxiliary transformers or connecting them for compensating for the phase shifts due to the connections of the transformer windings. All matching is done by the firmware of the relay.

3.1.1.10 CT matching

The CTs in almost all transformer differential protection applications do not match perfectly. The currents from each side are calculated in terms of a reference current that is calculated from the reference apparent power and the voltage. This calculation is done for each side of the transformer. In most application, the reference power is the maximum of the apparent power. Each secondary current is multiplied by the correction factor CF_{CT} defined by the following equation.

$$CF_{CT} = \frac{I_{CTp}\ \sqrt{3}\ V_N}{S_{ref}} \tag{4}$$

where,

I_{CTp} is the primary rated current of the CT

V_N is the rated voltage of the transformer

S_{ref} reference apparent power (maximum apparent power)

Figure 25 shows CT matching for a three-winding 25-MVA transformer. Normally, the CTs of the low voltage side (side 3) are adapted to the apparent power of that side. The correction factor CF_{CT3} is low in this example because the reference power is high. The selected relay should be able to handle a wide range of correction factors so that this low correction factor can be handled.

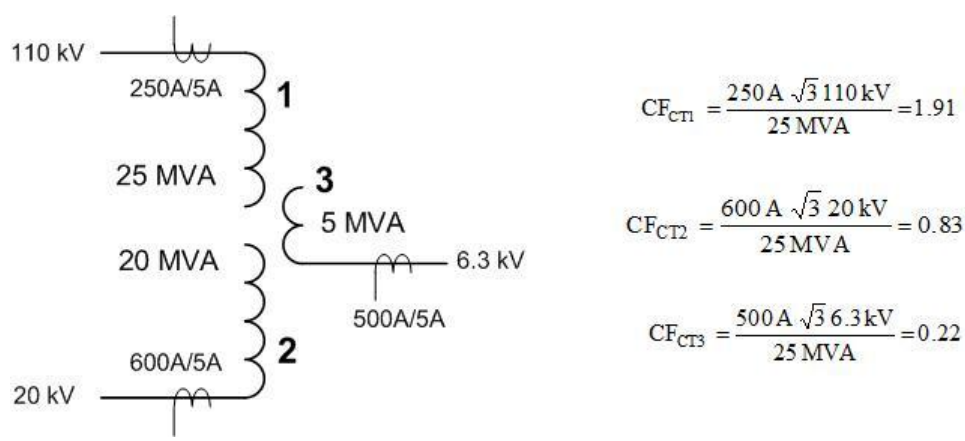

Figure 25 — An example of CT matching for a three phase transformer

Another example illustrates this problem further. Normally the CTs are adapted to the rated transformer current of each winding but, as already shown, correction factors are related to the maximum winding current and each current must be multiplied with this factor. This leads to problems for the third winding. As can be seen in Figure 26, the current of the tertiary winding must be multiplied by the very small correction factor CF_{CT3}. This factor corresponds to a ratio of 1 to 44. A separate matching transformer must be provided in this application. Another solution is to use a 1A CT on the tertiary winding, as shown in Figure 26 and connect it to the 5A-current

input of the relay. In this manner, a simple matching by 1:5 is realized. The rest is corrected in the software (correction factor of 8.8 must be set).

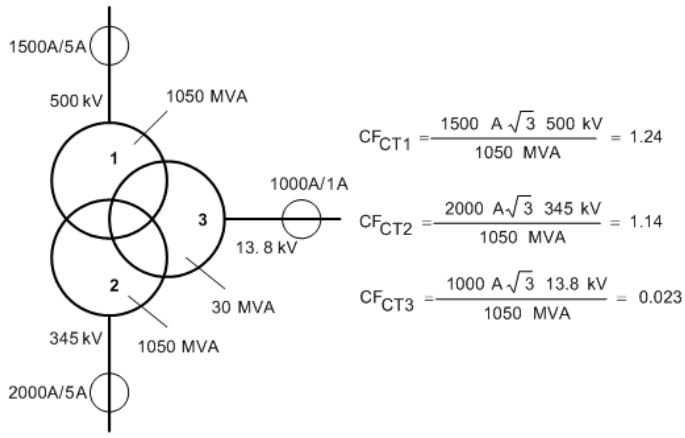

Figure 26 — Another example of matching CTs for a three-winding transformer

3.1.1.11 Vector group matching and zero sequence current handling

The vector group matching adjusts for the phase shift due to the connections of the windings of the three phases of the transformer. There are two possibilities; the first possibility is to correct from star connected side to delta (or zigzag) connected side and the second possibility is to correct from delta (or zigzag) connected side to star connected side. Because of its advantages, the approach for correcting from delta (or zigzag) connected side to star connected side is often used. This approach is briefly explained in this section.

The calculations for the YNd1 vector group are shown in Figure 27; this figure also shows the three-phase transformer and current phasors. The transformation is from the delta to wye side. The transformation rule for the delta-side is very simple and can be seen from the phasors. A current difference for each phase is calculated and the magnitude is adapted by division of √3. The calculation steps are summarised in the following matrix.

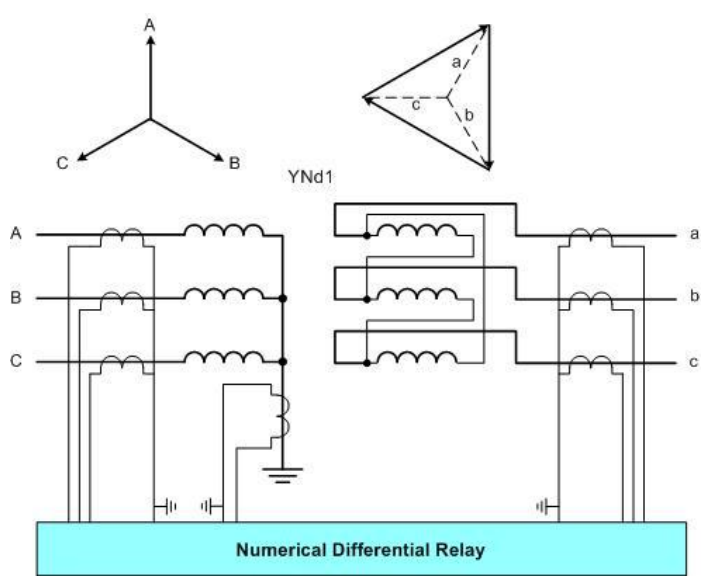

Figure 27 — Three-phase wye-delta transformer and current phasors

Corrections on the delta-side expressed mathematically are as follows:

$$\begin{bmatrix} I'_A \\ I'_B \\ I'_C \end{bmatrix} = \frac{1}{\sqrt{3}} \begin{bmatrix} 1 & -1 & 0 \\ 0 & 1 & -1 \\ -1 & 0 & 1 \end{bmatrix} \begin{bmatrix} I_A \\ I_B \\ I_C \end{bmatrix} \tag{5}$$

Zero sequence currents flow in the system connected to the star winding if a single phase to ground fault occurs. Positive-sequence and negative-sequence currents are transferred through the Δ-Y transformer but the zero-sequence currents circulate in the delta winding. Because CTs on the delta side do not measure the zero sequence currents, they must be subtracted from the currents measured on the star side. This leads to the following matrix in which zero sequence currents are obtained by summing the three phase currents.

Corrections on the Y-side (zero sequence current elimination) are as follows.

$$\begin{bmatrix} I'_A \\ I'_B \\ I'_C \end{bmatrix} = \begin{bmatrix} 1 & 0 & 0 \\ 0 & 1 & 0 \\ 0 & 0 & 1 \end{bmatrix} \begin{bmatrix} I_A \\ I_B \\ I_C \end{bmatrix} - \frac{1}{3} \begin{bmatrix} I_A + I_B + I_C \\ I_A + I_B + I_C \\ I_A + I_B + I_C \end{bmatrix} \tag{6}$$

The following equations summarize the calculation steps.

$$\begin{bmatrix} I'_A \\ I'_B \\ I'_C \end{bmatrix} = \frac{1}{3} \begin{bmatrix} 2 & -1 & -1 \\ -1 & 2 & -1 \\ -1 & -1 & 2 \end{bmatrix} \begin{bmatrix} I_A \\ I_B \\ I_C \end{bmatrix} \tag{7}$$

The sensitivity during an earth fault can be increased by 33% if the star point CT, shown in Figure 27 is also provided and is connected to the relay. In such a case, the following matrix is used.

Corrections on the Y-side (zero sequence current correction) are as follows.

$$\begin{bmatrix} I'_A \\ I'_B \\ I'_C \end{bmatrix} = \begin{bmatrix} 1 & 0 & 0 \\ 0 & 1 & 0 \\ 0 & 0 & 1 \end{bmatrix} \begin{bmatrix} I_A \\ I_B \\ I_C \end{bmatrix} + \frac{1}{3} \begin{bmatrix} I_E \\ I_E \\ I_E \end{bmatrix} \tag{8}$$

where,

I_E is the current provided by the CT in the transformer neutral

The advantage of this approach is clearly seen from Figure 28, Figure 29 and Figure 30 that show the fault currents for an external fault at location F1 as well as for an internal fault at location F2.

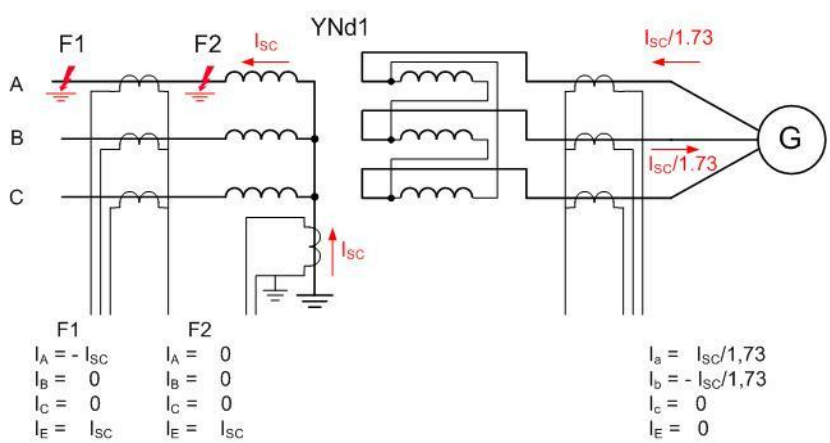

Figure 28 — Fault currents for faults in and out of transformer protection zone

The measured differential current in one element after the zero sequence elimination is only two-thirds of the short-circuit current and the measured differential currents in the other two elements are equal to one third of the fault current if the current measured by the CT in the neutral of the transformer is not used; this is shown in Figure 29.

$$\begin{bmatrix} I^*_A \\ I^*_B \\ I^*_C \end{bmatrix} = 1/3 \begin{bmatrix} 2 & -1 & -1 \\ -1 & 2 & -1 \\ -1 & -1 & 2 \end{bmatrix} \begin{bmatrix} -I_{SC} \\ 0 \\ 0 \end{bmatrix} \qquad \begin{bmatrix} 0 \\ 0 \\ 0 \end{bmatrix}$$

$$\begin{bmatrix} I^*_a \\ I^*_b \\ I^*_c \end{bmatrix} = 1/\sqrt{3} \begin{bmatrix} 1 & -1 & 0 \\ 0 & 1 & -1 \\ -1 & 0 & 1 \end{bmatrix} \begin{bmatrix} I_{SC}/\sqrt{3} \\ -I_{SC}/\sqrt{3} \\ 0 \end{bmatrix}$$

	F1	F2
$I^*_A =$	$-2/3\, I_{SC}$	0
$I^*_B =$	$1/3\, I_{SC}$	0
$I^*_C =$	$1/3\, I_{SC}$	0
$I_{DIFF1} = \lvert I^*_A + I^*_a \rvert =$	0	$2/3\, I_{SC}$
$I_{DIFF2} = \lvert I^*_B + I^*_b \rvert =$	0	$1/3\, I_{SC}$
$I_{DIFF3} = \lvert I^*_C + I^*_c \rvert =$	0	$1/3\, I_{SC}$

$$I^*_a = 1/3\, I_{SC} + 1/3\, I_{SC} = 2/3\, I_{SC}$$
$$I^*_b = 0 - 1/3\, I_{SC} = -1/3\, I_{SC}$$
$$I^*_c = -1/3\, I_{SC} + 0 = -1/3\, I_{SC}$$

Figure 29 — Currents in the relay due to a fault when neutral current is not used

When the current measured by the CT provided in the transformer neutral is used by the relay, higher sensitivity is achieved as is shown in Figure 30. The full short-circuit current is now measured and this is a substantial increase in the sensitivity.

$$\begin{bmatrix} I^*_A \\ I^*_B \\ I^*_C \end{bmatrix} = \begin{bmatrix} 1 & 0 & 0 \\ 0 & 1 & 0 \\ 0 & 0 & 1 \end{bmatrix} \begin{bmatrix} -I_{SC} \\ 0 \\ 0 \end{bmatrix} \qquad \begin{bmatrix} 0 \\ 0 \\ 0 \end{bmatrix} + \begin{bmatrix} 1/3\, I_{SC} \\ 1/3\, I_{SC} \\ 1/3\, I_{SC} \end{bmatrix}$$

$$\begin{bmatrix} I^*_a \\ I^*_b \\ I^*_c \end{bmatrix} = \frac{1}{\sqrt{3}} \begin{bmatrix} 1 & -1 & 0 \\ 0 & 1 & -1 \\ -1 & 0 & 1 \end{bmatrix} \begin{bmatrix} I_{SC}/\sqrt{3} \\ -I_{SC}/\sqrt{3} \\ 0 \end{bmatrix}$$

	F1	F2
$I^*_A =$	$-2/3 I_{SC}$	$1/3\, I_{SC}$
$I^*_B =$	$1/3\, I_{SC}$	$1/3\, I_{SC}$
$I^*_C =$	$1/3\, I_{SC}$	$1/3\, I_{SC}$
$I_{DIFF1} = \lvert I^*_A + I^*_a \rvert =$	0	I_{SC}
$I_{DIFF2} = \lvert I^*_B + I^*_b \rvert =$	0	0
$I_{DIFF3} = \lvert I^*_C + I^*_c \rvert =$	0	0

$$I^*_a = 1/3\, I_{SC} + 1/3\, I_{SC} = 2/3\, I_{SC}$$
$$I^*_b = 0 - 1/3\, I_{SC} = -1/3\, I_{SC}$$
$$I^*_c = -1/3\, I_{SC} + 0 = -1/3\, I_{SC}$$

Figure 30 — Currents in the relay due to a fault when neutral current is also used

3.1.1.12 Differential and Restraint Characteristic

The calculation of the differential current is realized according the Kirchhoff`s law considering that the current flowing into the node as positive. In this equation the matched currents (magnitude and phase shift correction) are used. The following Equation shows the differential current for phase-A of a three-phase three-winding transformer. The subscripts S1 to S3 identify the three windings.

$$\underline{I_{diff,A}} = \left|\underline{I^*_{A,S1}} + \underline{I^*_{A,S2}} + \underline{I^*_{A,S3}}\right| \quad (9)$$

The restraint currents are used in different forms. One realization often used is the summation of the absolute values of currents as is shown in the following equation.

$$\underline{I_{rest,A}} = \left|I^*_{A,S1}\right| + \left|I^*_{A,S2}\right| + \left|I^*_{A,S3}\right| \quad (10)$$

Some manufacturers multiply this equation with 0.5 to achieve the same scaling as the differential current. The advantage of using the summation of the absolute values is that it gives a high degree of stabilisation. Compared to this, the older practice of using the summation of phasors limits the tripping characteristic to one half of the first Quadrant (45°- straight line).

As an example the restraint characteristic is shown in Figure 31. The differential current moves along the 45° straight line under ideal conditions during an internal fault. However, there are different fault-current locations in the single and double infeed cases.

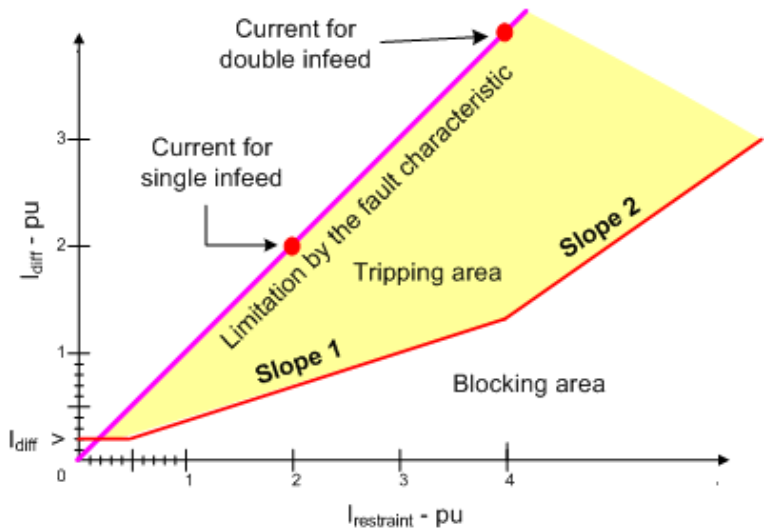

Figure 31 — Operating characteristic of a differential relay

In most cases the restraint characteristic is described by the following three straight lines.

— The pickup threshold I_{diff} > a value between 0.2 and 0.4 of the current rating of the transformer

— Line with slope 1 to avoid an over-function through a weak CT saturation or a mismatch due to different taps of the transformer

— Line with slope 2 to avoid an over-function through a heavy CT saturation during external faults as shown in Figure 18.

The factory settings are selected from experiences of utilities but should be changed as per practice of the utility. Most of the time, the pickup threshold and slope 1 only are changed when a transformer equipped with a tap changer is protected.

To achieve faster tripping times, the high set element of the differential current operates in most cases without stabilisation. The protection trips immediately if the differential current is over the threshold. Therefore the threshold must be set high enough (higher than the external short-circuit current limited by the short-circuit impedance of the transformer).

3.1.1.13 Inrush and over-excitation detection

The basic measuring principle is the filtering of harmonics from the differential current. The differential current calculated from the sampled phase currents is an instantaneous curve. The filters in most cases are based on Discrete Fourier Transform that uses a data window of one cycle. The calculated harmonics are the first (fundamental component), the second, third, fourth and the fifth.

Over-excitation of the transformer core is characterized by the presence of odd harmonics in the differential current. Thus, the third or fifth harmonics are suitable to detect this phenomenon. But, as the third harmonics is often eliminated in power transformers, for example when a delta winding is use, the fifth is used often.

Furthermore, in case of converter transformers odd harmonics are present which are not present during internal transformer faults. Therefore, the third harmonic component is used for stabilization.

All calculated harmonics are related to the fundamental component (first harmonics). The values for the thresholds can be, therefore, expressed in the following form:

Inrush: $\frac{I_{2\,harm}}{I_{1\,harm}}$ or $\frac{I_{2\,harm} + I_{4\,harm}}{I_{1\,harm}}$

Overexcitation: $\frac{I_{5\,harm}}{I_{1\,harm}}$ or $\frac{I_{3\,harm}}{I_{1\,harm}}$

A combination of second and fourth harmonics is used to restrain the differential relay during magnetizing inrush when the second harmonic content is low.

Another solution for detecting an inrush is the application of neural networks. The network is trained to block the tripping in the case an inrush current is experienced. The training is done with transient simulation programs. The advantage of this approach is that no settings are necessary.

A similar idea is the consideration of the physical phenomena of a transformer in a mathematical model. The equivalent replica of the transformer is used and the flux is calculated from voltages and currents. This principle is stable in the case of an inrush and internal faults, but unstable during external faults. The reason is the leakage flux cannot be exactly calculated. The further disadvantage is the cost increases because of the additional expense of providing voltage inputs if they are not available for other monitoring, control or protection functions. Both principles are in a test stage at the moment.

Figure 32 shows an example of the harmonics from the inrush currents shown in Figure 23. The Discrete Fourier Algorithm was used to calculate the harmonic components of the currents.

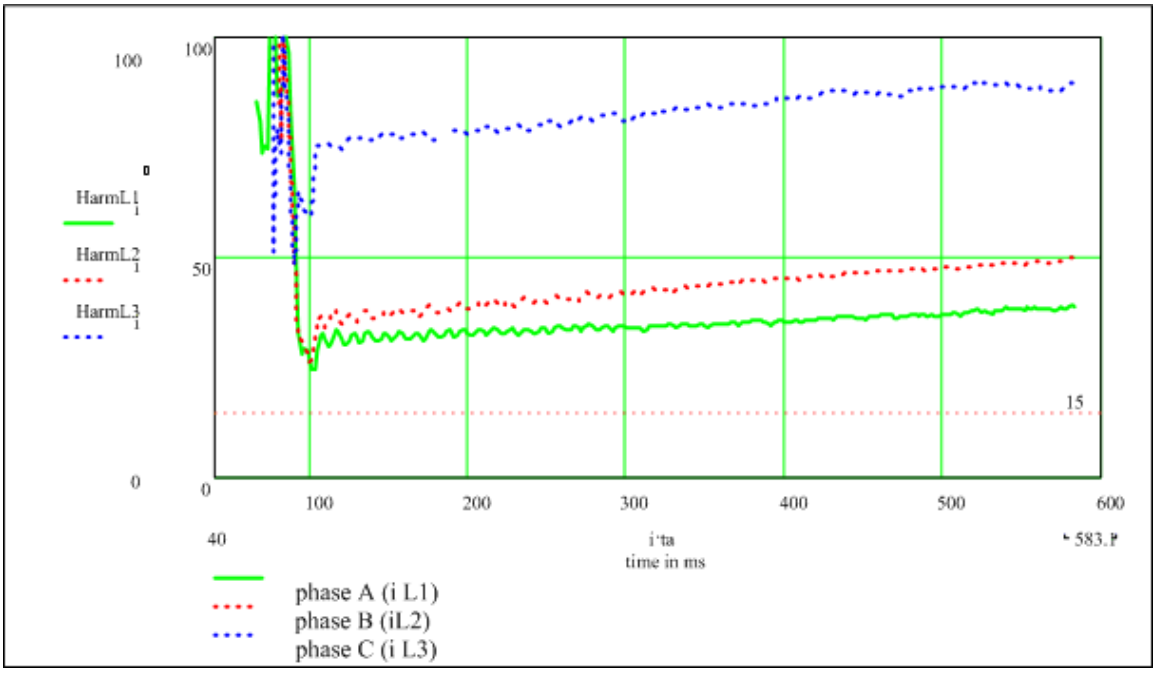

Figure 32 — Second harmonic components of typical inrush currents

A reduction of second harmonics in the phase currents is possible due to the magnetizing characteristic of modern power transformers or due to weak infeeds. This sometimes leads to a trip during a switching-on operation. A reduction of the pickup threshold from 15% to 12% is not used usually because fault current during internal faults also contain second harmonic components if the transformer core is saturated. Using too low a setting of the second harmonics increases the risk of the protection not working properly.

A practical solution is the so called "cross block function". If harmonics are detected in one phase, all other phases are blocked (OR-Logic is realized). This blocking is applied for a limited adjustable time that is established during the commissioning of the protection system and is set as short as possible to avoid a failure to operate in the case of an evolving fault (internal fault after an inrush.

The pickup of the differential relay increased in some applications when over excitation is detected instead of blocking the transformer differential relay. This prevents the differential relay from operating during over excitation conditions while providing proper protection when internal faults occur during over excitation condition.

3.1.1.14 CT-saturation handling

Numerical relays implement a saturation detector to avoid operation during external faults in case one or more CTs saturate. Different techniques are used for detecting CT saturation by manufacturers; two techniques are described briefly in this report.

3.1.1.14.1 First technique

Figure 19 showed the trajectory of differential-restraint currents during an external fault. CTs do not saturate for at least one-quarter or one-half cycle when a fault occurs. During this period, the differential current is small and the restraining current is large. The trajectory of this information is clearly in the blocking area. The trajectory moves into the tripping area if one CT saturates as is shown in Figure 33. When the trajectory is observed in the blocking area, add-on stabilization

feature is activated for an adjustable pre-determined time. This blocking is removed as soon as the trajectory moves steadily (i.e. over at least one cycle) towards the fault characteristic. This approach detects evolving faults in the protected zone reliably even after an external fault with CT saturation.

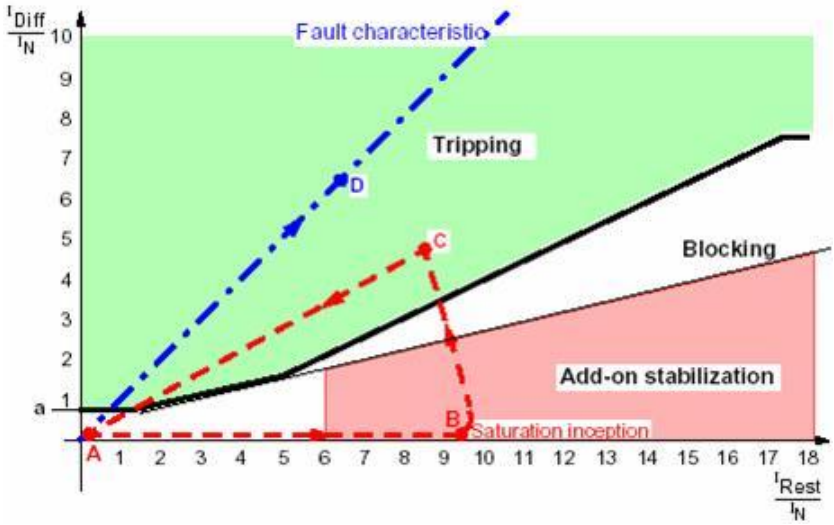

Figure 33 — Trajectory supervision for detecting CT saturation

3.1.1.14.2 Second technique

Another approach for detecting CT saturation is to analyze the waveforms of differential and restraint currents after the inception of a fault. Figure 34 shows that the restraint current, i_H, appears immediately after the fault occurs. A differential current, i_A, is observed after a few milliseconds. This delay indicates that an external fault has occurred and a CT has saturated. The restraint and differential currents appear at the same time when an internal fault occurs (there is no time delay).

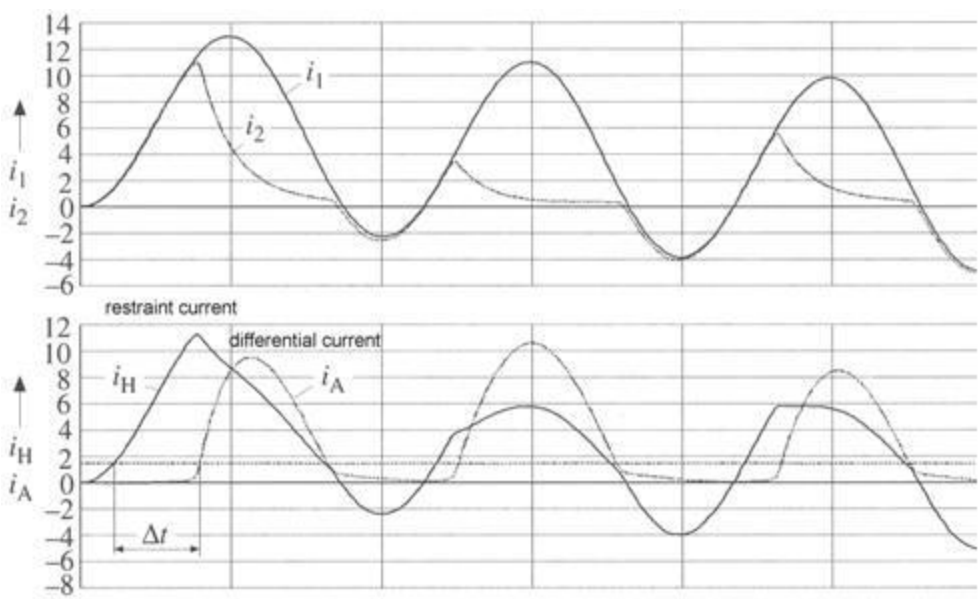

Figure 34 — CT saturation detection by supervising quantized values of differential and restraining currents

Another critical case for protection during internal faults is when a CT saturates. In most applications, a high set element is used that operates in a few samples and detects the internal fault reliably. This supervision supports the initial differential trip indication and a priority trip control is trigged by a jump detector.

3.1.1.15 Application notes

The emphasis of this section is the appropriate handling of zero-sequence currents that should be correctly handled by the relay. This was achieved by using matching CTs in electromechanical and analogue static relays and is handled by the software in numerical relays. Three cases are presented here to illustrate this issue.

3.1.1.15.1 Case 1

Figure 35 shows a two-winding wye-delta transformer of vector group YNd1. This is a commonly used application because the neutral can operate with full load. The current inputs to the relay are directly from the six CTs. On the grounded wye side (side 1), the relay eliminates the zero sequence current. On the delta side this is done with vector group matching. To increase the sensitivity, an input from the CT provided in the neutral connection to ground is used as is discussed in Section 3.2.2.

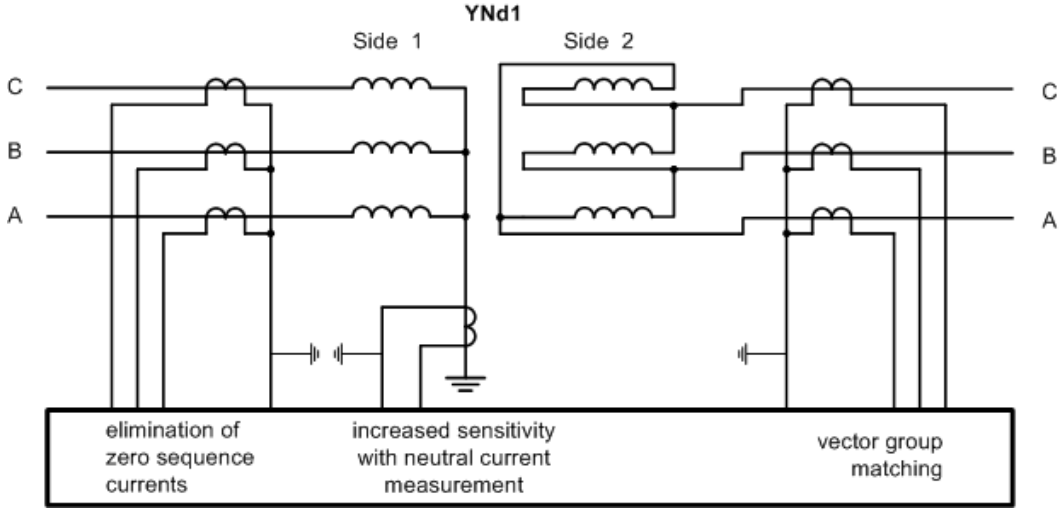

Figure 35 — Differential protection of a delta-wye transformer of YNd1 vector group

3.1.1.15.2 Case 2

Another important case is when a zigzag transformer is connected to the terminals of the delta winding and is inside the transformer protection zone. Zero sequence currents flow for an external fault on the delta side of the transformer as is shown in Figure 36. The source of the zero sequence current is the neutral earthing transformer. The fault currents on the wye side are in two phases only. To avoid incorrect operation, the zero sequence current on the delta side must be eliminated. After the subtraction of the zero sequence currents, the currents in front of the delta winding in Figure 36 are obtained. This matches with the I_A-I_B, I_B-I_C and I_C-I_A currents on the wye side.

The zero sequence current is automatically eliminated if the transformer on the low voltage side has an odd vector-group number and the vector group matching is realized from the odd to zero side. An odd vector group matching always results in subtracting two phase currents. With this

approach, the zero sequence currents are directly eliminated as is shown here. The transformation ratio of the winding currents (I_1/I_2) for a wye–delta transformer is $1/\sqrt{3}$. So on the high voltage side (side 1) a fault current of 1/3 I flows in phase A and C. Two methods for compensating for the zero-sequence currents are described in this section.

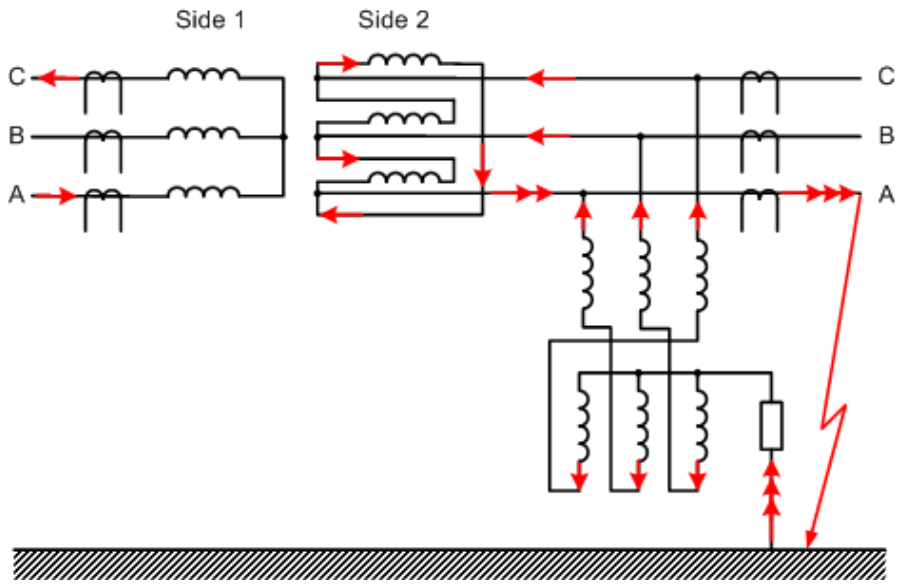

Figure 36 — Flow of zero sequence currents in a wye-delta transformer with a zig-zag transformer on the delta side

3.1.1.15.2.1 Method 1:

Fault current	Current after zero sequence elimination	Vector group matching

$$\begin{bmatrix} \underline{I} \\ 0 \\ 0 \end{bmatrix} \qquad \begin{bmatrix} \frac{2}{3}\underline{I} \\ -\frac{1}{3}\underline{I} \\ -\frac{1}{3}\underline{I} \end{bmatrix} \qquad \begin{bmatrix} \underline{I'_A} \\ \underline{I'_B} \\ \underline{I'_C} \end{bmatrix} = \frac{1}{\sqrt{3}} \begin{bmatrix} 1 & -1 & 0 \\ 0 & 1 & -1 \\ -1 & 0 & 1 \end{bmatrix} \begin{bmatrix} \frac{2}{3}\underline{I} \\ -\frac{1}{3}\underline{I} \\ -\frac{1}{3}\underline{I} \end{bmatrix} = \frac{1}{\sqrt{3}} \begin{bmatrix} \underline{I} \\ 0 \\ -\underline{I} \end{bmatrix}$$

3.1.1.15.2.2 Method 2:

Fault current	Vector group matching

$$\begin{bmatrix} \underline{I} \\ 0 \\ 0 \end{bmatrix} \qquad \begin{bmatrix} \underline{I'_A} \\ \underline{I'_B} \\ \underline{I'_C} \end{bmatrix} = \frac{1}{\sqrt{3}} \begin{bmatrix} 1 & -1 & 0 \\ 0 & 1 & -1 \\ -1 & 0 & 1 \end{bmatrix} \begin{bmatrix} \underline{I} \\ 0 \\ 0 \end{bmatrix} = \frac{1}{\sqrt{3}} \begin{bmatrix} \underline{I} \\ 0 \\ -\underline{I} \end{bmatrix}$$

If the grounding transformer is outside of the protected zone, the standard connection and settings can be used.

3.1.1.15.3 Case 3

Another typical application is a wye-wye transformer with a delta-connected tertiary winding. The star point can operate with full load. For this application the zero sequence elimination should be activated on the grounded side. The current distribution for a single phase fault is shown in Figure 37. Only positive and negative sequence currents flow on the wye-connected side (side 2). Zero sequence currents circulate in the delta winding.

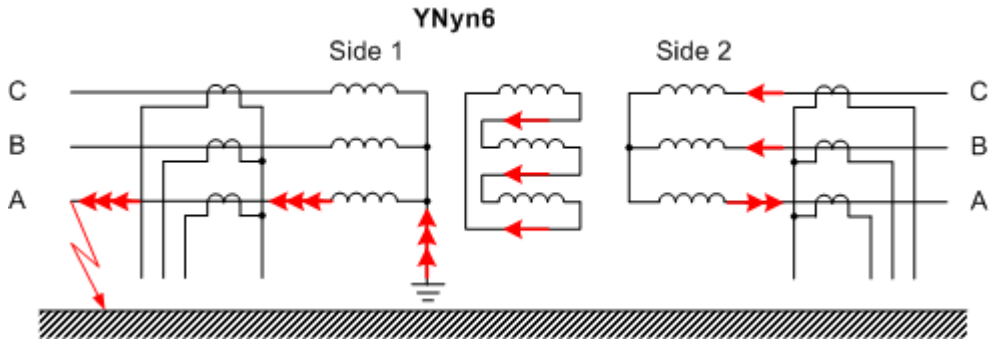

Figure 37 — Zero sequence current flows in a wye-wye transformer with a delta winding

3.1.2 Differential Protection of Auto-Transformers

Autotransformers are designed either as three-phase units or are made up of three single-phase units. They are used for interconnecting solidly earthed EHV and HV networks if the rated voltages of both networks do not differ by more than a factor of two to three. Use of auto-transformers saves material and consequenly weight as well as losses compared with the use of transformers with separate windings for each voltage level.

Autotransformers with wye connected primary and secondary windings (serial and common winding) are usually equipped with a delta-connected tertiary winding that is rated about one third of the throughput rating. The serial, common and tertiary winding arrangements of an auto-transformer are shown in Figure 38.

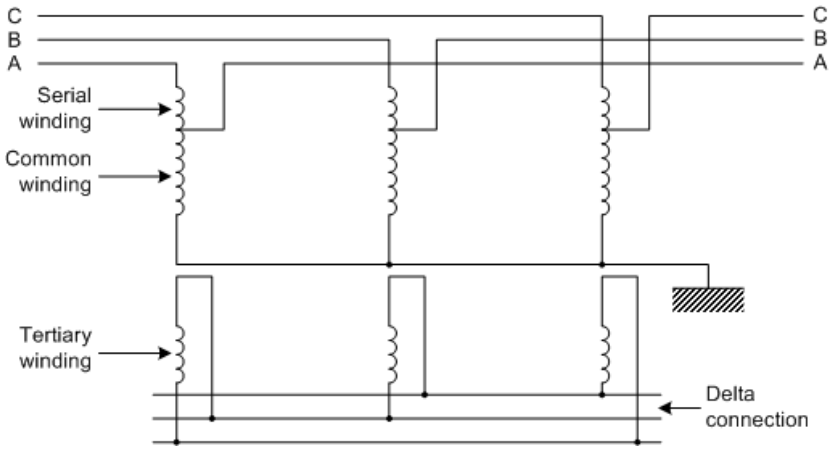

Figure 38 — An auto transformer with a delta connected tertiary winding

Shunt reactors or capacitors can be connected to the tertiary winding for power factor correction. A booster transformer, consisting of energizing and regulating windings, can be accommodated in the same tank for voltage control by in-phase or phase-angle regulation as is shown in Figure 39.

It is possible to use different features with differential protection of autotransformers depending on the application. Features of four scenarios are listed in Table 8; these senarios are then discussed in this section.

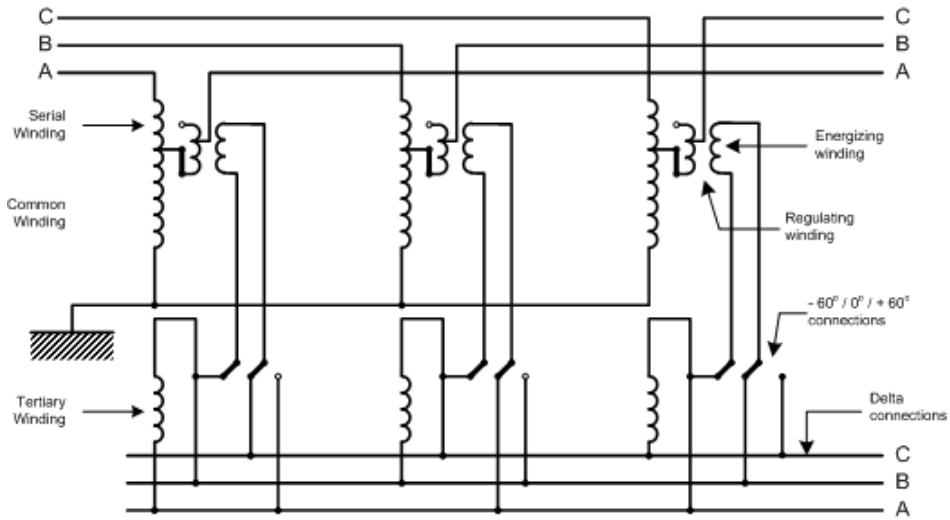

Figure 39 — Autotransformer with energizing and regulating windings

Table 8 — Features of four scenarios concerning autotransformers

	Delta tertiary without feeders	Neutral earthing with phase-segregated CTs	CTs in series with delta tertiary	CTs outside delta tertiary
Differential protection	Two-end	Three-end	Three-end	Three-end
Amplitude matching	$V_{nom,a} \neq V_{nom,b}$ [1]	$V_{nom,a} = V_{nom,b} = V_{nom,c}$ [1]	$\sqrt{3} \cdot V_{nom,c}$ [1]	$V_{nom,c}$ [1]
Vector group matching	$G_{a-b} = 0$	$G_{a-b} = 0$; $VG_{a-c} = 0$	$G_{a-b} = 0$; $G_{a-c} = 0$	$G_{a-b} = 0$; G_{a-c} = odd
Zero sequence current filter	With	Without	Without	With
Inrush stabilization	With	Without	With	With
Phase-segregation	No	Yes	Yes	No
Voltage adjustment effect	Yes	No	No	Yes
Sensitivity to earth faults	Low	High	High	Low
Turn-to-turn fault protection	Yes	No	Yes	Yes
Delta tertiary protection	No	No	Yes	Yes

[1] a,b,c: ends of the differential protection

A two-ended differential protection may be applied if the tertiary winding is connected in delta, is used for stabilizing only and no load or voltage regulating capacitors or reactors are connected to this winding. This arrangement is shown in Figure 40. The setting of the differential protection corresponds to the setting of a two-winding transformer with neutral grounded at both ends.

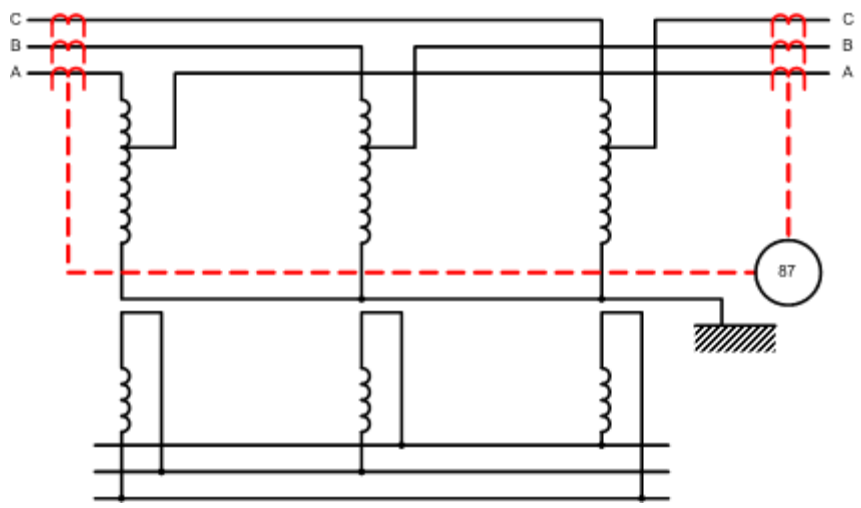

Figure 40 — Differential protection of an autotransformer if the tertiary is not connected to any load

3.1.2.1 Neutral grounding with phase-segregated CTs

The use of phase segregated CTs on an autotransformer is shown in Figure 41. In case of neutral grounding with phase-segregated CTs the ideal solution is to apply a three-end differential protection. The protected zone corresponds to a galvanic connected electrical node.

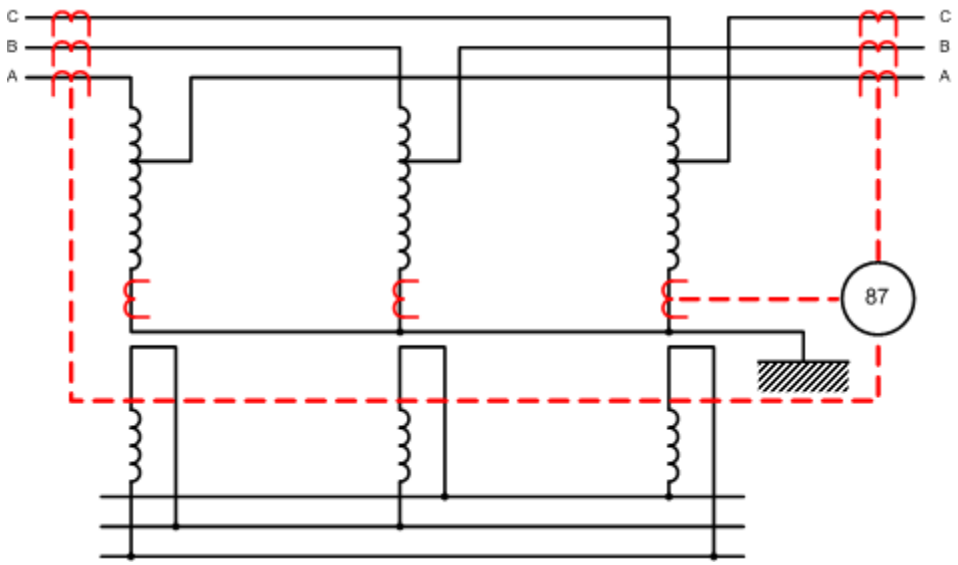

Figure 41 — Differential protection of an autotransformer with three segregated CTs in the neutral

3.1.2.2 Amplitude matching:

Because of the galvanic connected electrical node, amplitude matching has to be based on a common primary nominal voltage (nominal voltage of the serial or of the common winding) for all three ends.

3.1.2.3 Vector group matching:

Because of the galvanic connected electrical node vector group matching of end b (vector group a-b) and vector group matching of end c (vector group a-c) have to be set corresponding to vector group number ‘0’.

3.1.2.4 Zero-sequence current filtering:

Because the neutral-to-earth current is included, zero-sequence current filtering may be disabled for all three ends.

3.1.2.5 Inrush stabilization:

The inrush restraint is not required because current summation for differential protection is done at an electrically connected node with no transformer coupling.

The differential protection described above works strictly on phase-segregated CT arrangements only because inrush stabilization is not included. While sensitivity to earth fault detection is high, turn-to-turn faults and faults on the tertiary winding cannot be detected.

3.1.2.6 CTs in series with phase windings of delta-connected tertiary

Information on the coupling between the autotransformer winding and the tertiary winding is available if the current through the tertiary winding is measured instead of the neutral-to-earth current per phase as shown in Figure 42.

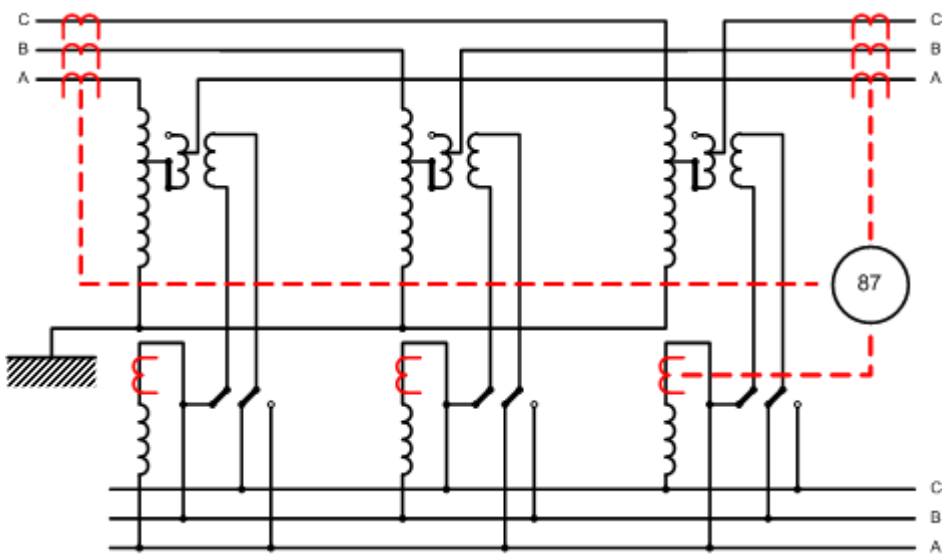

Figure 42 — Differential protection of an autotransformer using three buried CTs in the tertiary winding

3.1.2.7 Amplitude matching:

Amplitude matching is based on the nominal primary voltages of the individual terminals because of coupling of the transformer winding. Considering that the CTs of the third end are located in series with the delta-connected tertiary winding, √3 times the primary nominal voltage has to be used for amplitude matching calculations.

3.1.2.8 Vector group matching:

Vector group matching of end b (vector group a-b) and vector group matching of end c (vector group a-c) have to be set corresponding to vector group number '0' because of the limb related measuring systems.

3.1.2.9 Zero-sequence current filtering:

Zero-sequence current filtering may be disabled for all three ends because the neutral-to-earth current is available from measurement of the current in the tertiary winding.

3.1.2.10 Inrush stabilization:

Stabilization of the relay during magnetizing inrush should be enabled to take care of the coupling between the transformer windings. The turn-to-turn faults can be detected in principle because of the coupling of the transformer windings and the tertiary winding is included in the protection zone. Earth faults on the regulating winding will be detected too whereas the differential measuring systems are not affected by voltage adjustment. Only the requirement of stabilizing during magnetizing inrush is unfavourable.

3.1.2.11 CTs outside delta tertiary winding

In many cases, CTs of the tertiary winding are not located in series with the phase windings but are located outside the delta winding as shown in Figure 43. A three-end differential protection may be applied in this case. This differential protection offers the largest protection zone in comparison to all the applications described above. However, the requirement of zero-sequence current filtering leads to reduced in earth fault sensitivity. The setting of the differential protection corresponds to the setting of a separate-winding transformer. The differential measuring systems are affected by in-phase or phase-angle regulation.

3.1.2.12 Tripping characteristic:

This overall differential protection is affected by voltage adjustment. This has to be taken into consideration for the setting of the tripping characteristic.

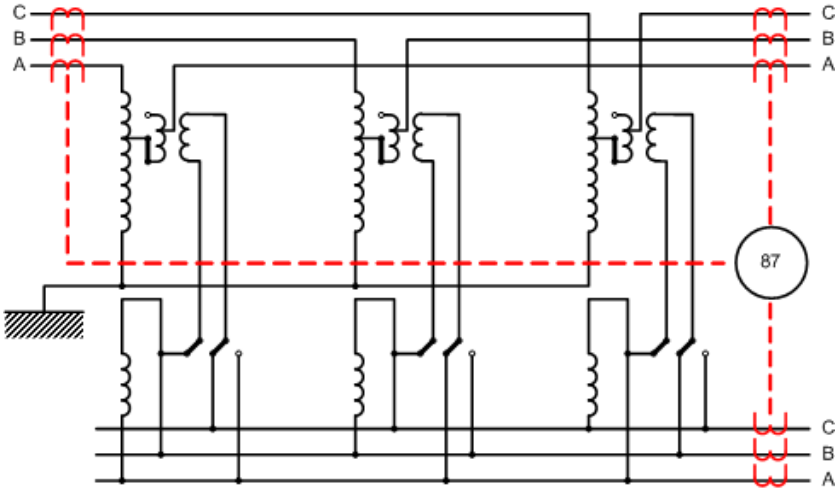

Figure 43 — Differential protection of an autotransformer with CT in the circuit connected to the tertiary winding

3.1.3 Differential Protection of Phase Shifting Transformers

Phase shifting transformers are used to regulate the flow of power on interconnections between two power systems or sub-systems. Some of the phase-shifting transformers used for this purpose are of the following types.

- Delta secondary series winding / grounded wye exciting windings
- Wye secondary series winding / delta primary exciting winding
- Delta hexagonal connection
- Tapped series winding design
- Grounded wye connection with magnitude control

3.1.3.1 Delta secondary series winding and grounded wye exciting winding phase shifting transformer

Delta secondary series winding / grounded wye exciting winding configuration is the most commonly used configuration for phase shifting transformers. The three phase connection is shown in Figure 44. As shown in this figure, the primary and exciting units are contained in separate tanks. The primary winding of the series unit is connected to the primary winding of the exciting units via three single-phase high voltage connections. The secondary winding of the series unit is connected to the secondary winding of the exciting unit via a three-phase low voltage connection. The centre taps of the primary winding of the series unit are connected to the primary winding of the exciting unit. The secondary winding of the series unit is connected in delta and is connected to the grounded-wye connected secondary winding of the exciting unit. This configuration offers the advantages of a graded excitation winding insulation, grounded neutral and constant zero sequence impedance.

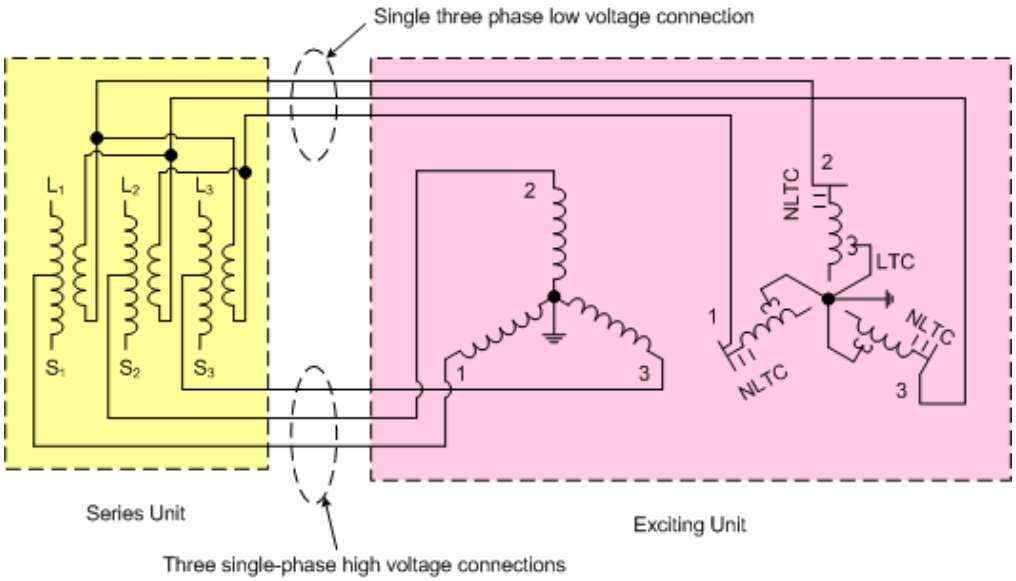

Figure 44 — Delta secondary series winding and grounded wye exciting winding phase-shifting transformer

This arrangement adds a regulated quadrature voltage, which is derived from the phase-to-phase voltages, to the source line-to-neutral voltage. Load tap changers (LTC) permit phase angle

variations in the advance or retard to increase or decrease the phase shift. This controls the flow of power on the interconnection.

The phase angle shifts of phase A voltage are developed by adding a quadrature voltage derived from voltages of phases B and C. Magnitude of the quadrature voltage is varied by changing the tap on the load tap changer in the exciting winding. By controlling the level of the quadrature voltage impressed on the secondary of the series unit, the phase shift across the transformer is controlled.

Primary protection of the phase shifting is provided by two differential relays, one relay for protecting the primary windings of the series and exciting units and the other relay for protecting the secondary windings of the series and exciting units. Figure 45 shows the single line diagram for the differential relay protecting the primary windings.

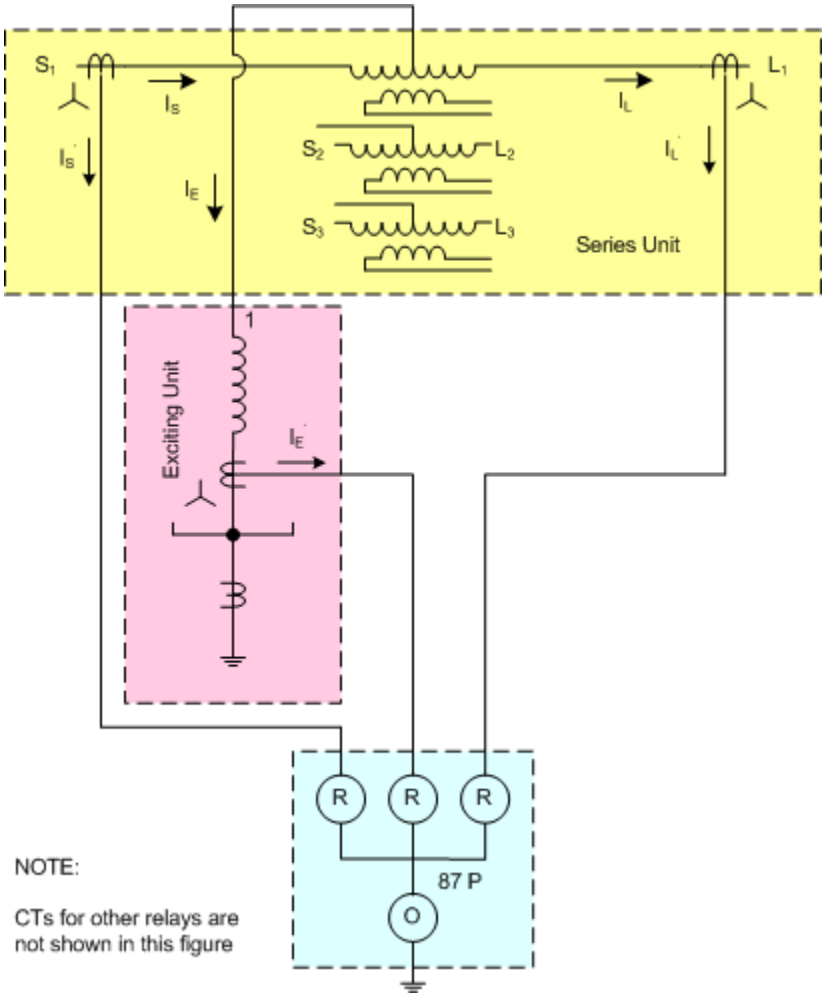

Figure 45 — Differential protection of the primary windings

The CTs on the source and load side of the series unit can be connected in wye or delta configurations. However, it is preferable to use the wye configuration for the CT connections. This provides the advantage of identifying the faulted phase. The current flowing into a phase of the series windings, current flowing out of that phase of the series windings and the excitation current supplied from that phase to the primary of the excitation unit are compared. To obtain proper operation all CTs used for this protection system should have identical ratios. The

currents from the source, to the load and for excitation are used for restraining the relay whereas the unbalance of the currents is used for operating the relay.

If the series unit saturates, the performance of the relay is not affected because all CTs are provided on the primary circuit.

The single line diagram for differential protection of the secondary windings is shown in Figure 46. In this case, the currents flowing into the series windings, current flowing out of the series windings and the currents in the secondary windings of the excitation unit are compared. CTs on the source and load side of the series unit are connected in delta configuration and the CTs on the secondary winding of the exciting transformer are connected in wye configuration. This accommodates the phase shift due to the secondary windings of the series unit having been connected in the delta configuration.

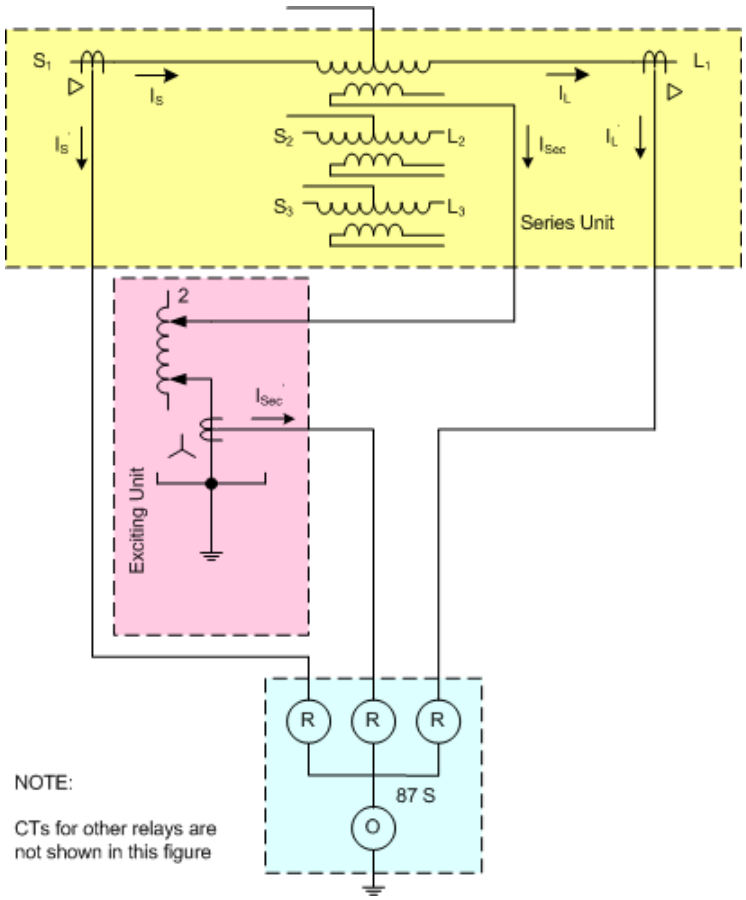

Figure 46 — Differential protection of the secondary windings

Because one of the currents used in this arrangement is from the secondary circuit of the series winding, the relay could have an un-desired tripping if the series unit saturates during an external fault. System studies should be conducted to ensure that the series unit does not saturate. If the unit saturates, the secondary differential relay should be de-sensitized to avoid tripping during external faults.

Because two sets of CTs are provided on the primary windings of the series unit and one set of CTs are provided on the secondary windings of the exciting unit, proper CT ratios should be selected taking in to account the turns-ratio of the series unit. It is also essential to consider that the current in the two halves of each winding of the series unit are not equal. The current in the

secondary winding should be determined considering the distinct ampere-turns of the two halves of the primary winding.

3.1.3.2 Backup Protection

Inverse or very inverse time overcurrent relays applied in the neutrals of the primary and secondary windings of the excitation unit may be used for backup protection.

3.2 Restricted Earth Fault Protection

Restricted earth fault protection is used to successfully detect faults in grounded wye connected transformer windings. They should discriminate faults in the transformer zone from the faults outside the transformer protection zone. One type of ground differential relay (87G) is shown in Figure 47. This is a zero-sequence overcurrent relay that has practically no current when a fault is outside the transformer protection zone but has the total zero-sequence current in the fault when it is in the protection zone. Another option is to use a directional overcurrent relay as shown in Figure 48. Both protection schemes should operate correctly for internal ground faults irrespective of the fact whether the circuit breaker on the wye side of the transformer is open or closed. The schemes should operate correctly as well if an additional zero-sequence source is present in the system to which the transformer may be connected.

The auxiliary CTs are needed if the phase and neutral CTs are of different ratios. Both schemes are particularly useful when the ground fault current is limited and other protection systems are not likely to detect them. The operating current in the device 67G is zero for an external fault if the CT ratios are matched. Therefore, it is advisable to select the ratio of the auxiliary CTs to give definite restraint bias to 67G for an external ground fault.

These relays are more sensitive than the transformer differential relays in detecting faults that involve part of the transformer winding.

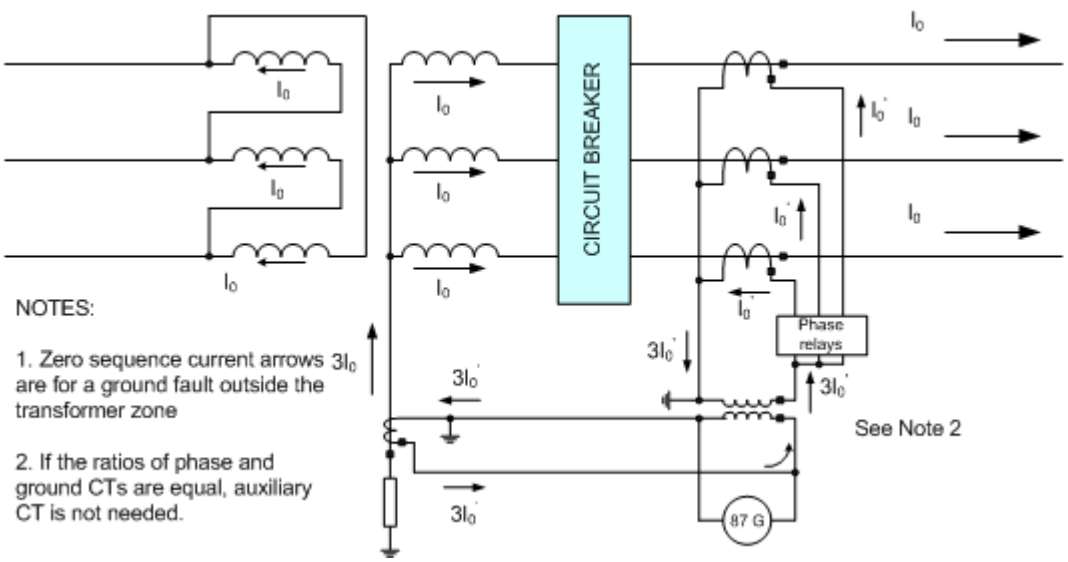

Figure 47 — Restricted earth fault protection using an overcurrent relay

Unequal CT currents can occur due to CT saturation during external faults producing residual currents during phase faults. However, no transformer neutral current is present but sensitive ground differential relays may operate unnecessarily. The arrangement shown in Figure 47 could operate under these conditions. To avoid this, the following two features are used.

— Biased restricted earth fault protection

- Biasing by residual current
- Biasing by maximum phase current

— High impedance restricted earth fault protection

3.2.1 Biased Restricted Earth Fault Protection

One form of biased restricted earth fault protection uses the following operating current (I_{OP}) and restraining current (I_{RES}).

$$I_{OP} = \left| k_1 \sum \left[I_A + I_B + I_C \right] + k_2 I_N \right| \tag{11}$$

$$I_{RES} = \left| k_1 \sum \left[I_A + I_B + I_C \right] \right| \tag{12}$$

Ideally, the operating current for external ground faults is zero whereas the restraining current is substantial. Such a characteristic is as shown in Figure 49. Another form of restraint that is used in numerical biased-restricted-earth-fault relays is a combination of the maximum phase current and neutral current. The restraint current (I_{RES}) in this case can be expressed as follows.

$$I_{RES} = \frac{1}{2} \left[k_1 \max\left(|I_A|, |I_B|, |I_C| \right) + k_2 |I_N| \right] \tag{13}$$

The characteristic in this case is modified to the form shown in Figure 50.

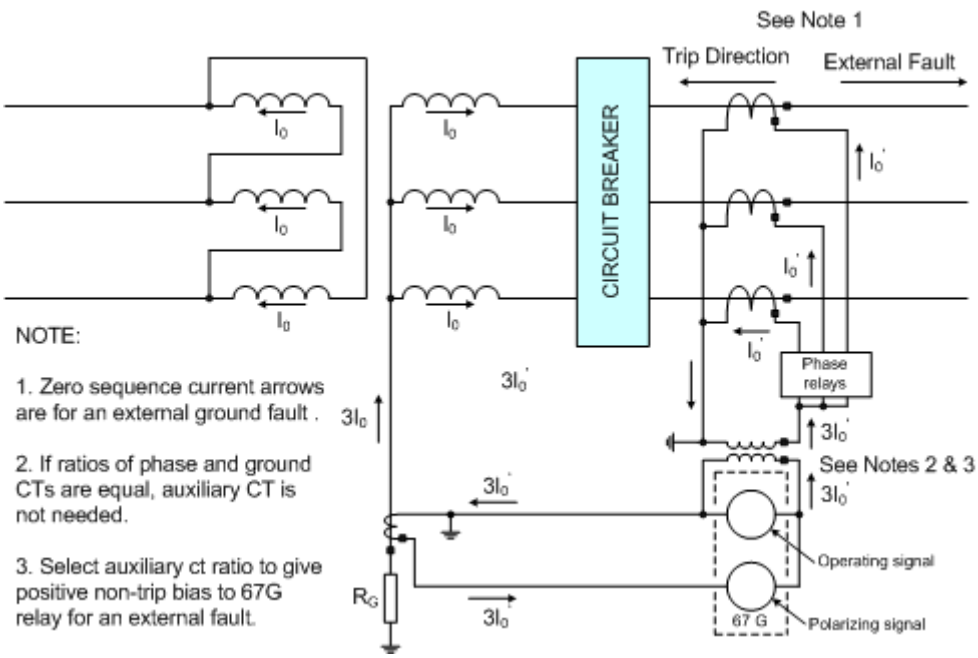

Figure 48 — Restricted earth fault protection using a directional relay

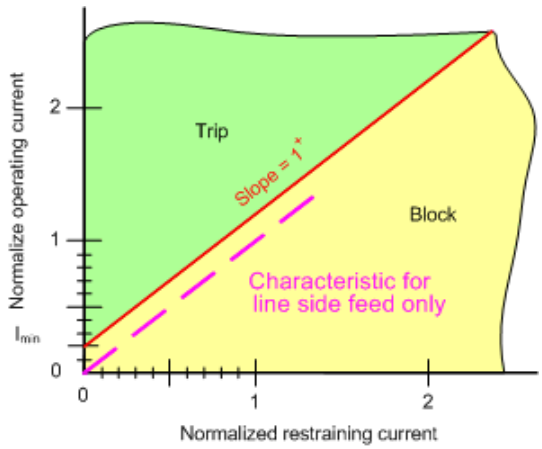

Figure 49 — Operating characteristic of a biased restricted earth fault relay

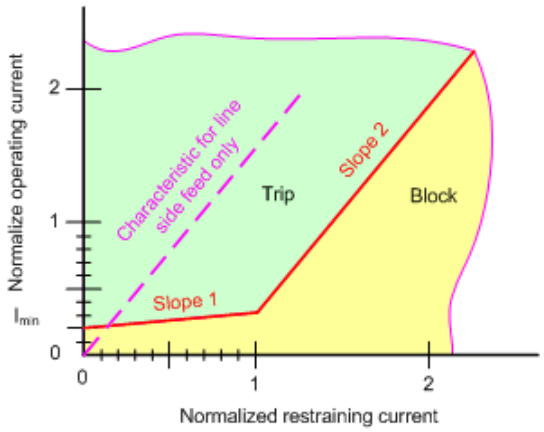

Figure 50 — Operating characteristic of a biased restricted earth fault relay using maximum phase current

3.2.2 High Impedance Restricted Earth Fault Protection

The high impedance restricted earth fault protection is similar to the high impedance differential protection of busbars. Its application to a delta-wye transformer for detecting faults on the wye winding is shown in Figure 51; it is assumed in this application that the ratio of the line CTs and the neutral CT are the same. The relay (87 G) in this application is a high-impedance overcurrent relay. The flow of zero-sequence currents shown in this figure are for an external fault. It is obvious that there is no current in the relay because it circulates between the phase and neutral CTs. If the faulted phase CT saturates, it acts like a short circuit for the flow of currents in the secondary circuit as shown in Figure 52 and the current out of the neutral CT divides among the relay and the saturated CT. Since the impedance of the relay is substantially high compared to the leads to the saturated CT, most of the output of the neutral CT is routed through the saturated CT and very little current flows in the relay.

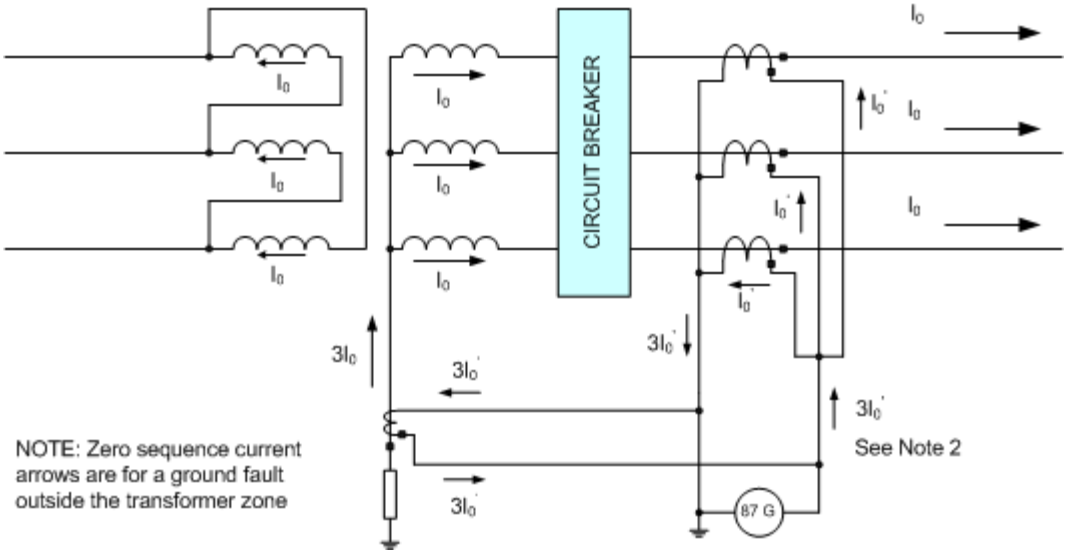

Figure 51 — Restricted earth fault protection using a high impedance relay

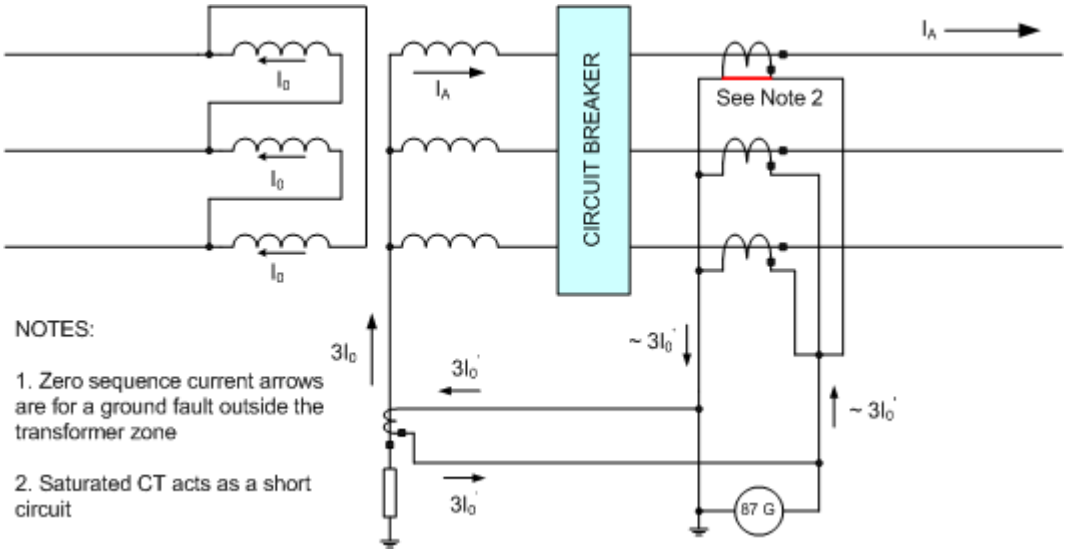

Figure 52 — Current flows in a restricted earth fault high impedance relay with saturated CT

3.3 Over-fluxing Protection

Different terms are used for this protection function such as flux, excitation (as used for excitation in rotating machines) and volts-per-Hertz (V/Hz) that is derived from the technical solution discussed in this section. The ANSI number of this function is 24.

Overvoltage on a power transformer leads to a higher flux in the core resulting in higher magnetizing currents. This happens due to the non-linear magnetizing characteristics of the core. Overvoltage usually occurs if a transformer is connected on the low voltage side to a generator and the high-voltage side is not connected to the network. A voltage rise at a below normal frequency is possible either due to operating errors during generator starting, equipment malfunction during generator starting or due to failures in the voltage and speed regulators on full-load rejection. The core flux increases and the magnetic losses increase when the frequency

is less than its normal value. The magnetizing flux enters in other structural parts of the transformer as well; this results in additional eddy current losses. Because of increased losses, the temperature of the iron winding and some structural parts increases.

3.3.1 Basics

A critical situation occurs in a transformer if the flux exceeds the rated value. The flux, Φ, in the core of a transformer is given by the following equation.

$$\Phi = \frac{1}{4.44\ \mathrm{N}} \frac{U}{f} \tag{14}$$

where,

- f is the frequency of the voltage
- N is the number of turns in the winding
- U is the voltage applied to the winding

This equation shows that the flux is directly proportional to U/f in a transformer. Either the absolute values or percentage values of the voltage and frequency can be used for calculating flux. The flux is more than the rated value if U/f is more than one per unit.

Transformer manufacturers give a limiting curve [U/f = F(t)] for each transformer. A sample of such a curve is shown in Figure 53. Flux level of 10% over the rated value is continuously allowed in most applications. A trip is required in a short time if this value exceeds 40%.

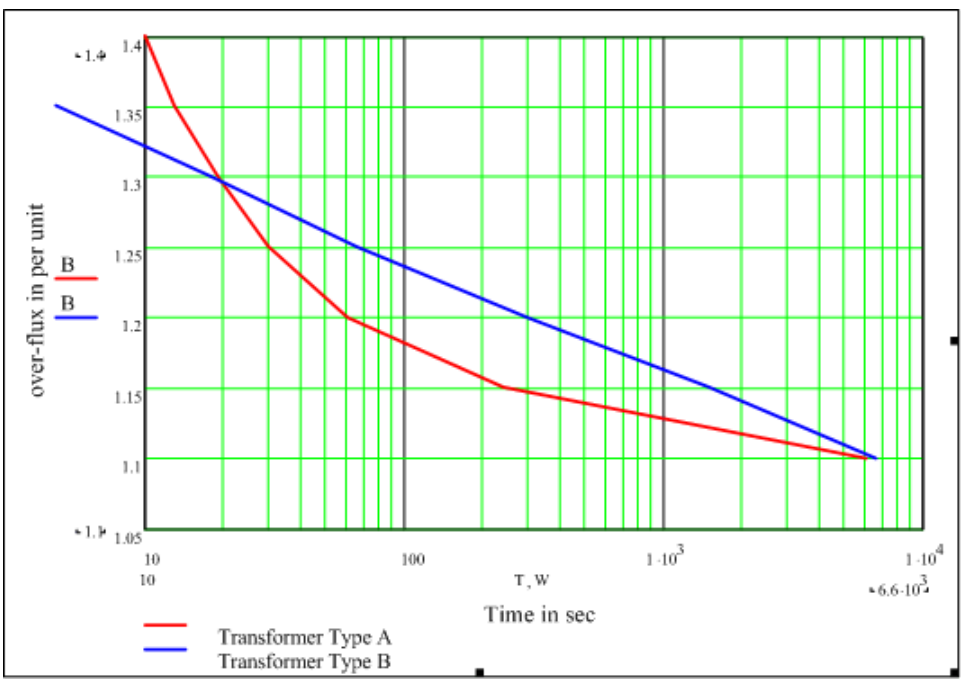

Figure 53 — Permissive over-fluxing in two power transformers

3.3.2 Numerical Realization

Voltage and frequency are calculated by the software. Attention is given to the wide operating range of frequency especially when a generator is started. A standard Fourier filter with a fixed

sampling rate is not suitable because its accuracy is not acceptable when the frequency of the signals is not close to the rated value.

One way to achieve the desired accuracy is to track the frequency and adjust the sampling rate to keep the samples per period constant. This maintains the accuracy of the Fourier filter and allows the use of standard filter coefficients. This approach works over a wide range of frequency, for example from 10 Hz to 70 Hz.

The filter coefficients should be changed as the frequency deviates from its nominal value if a constant sampling frequency is used. The use of an additional Hamming window improves accuracy of the measurements. When this approach is used, a number of filter coefficients are stored in the relay and are used as and when needed. Acceptable accuracy can be achieved with this approach up to the half of the rated frequency (Nyquist frequency) theoretically and up to one-third of the rated frequency practically.

V/Hz measurements using time domain techniques can be applied to provide accurate results over a wide frequency range of 2 to 80 Hz [48].

If there a mismatch between the rated voltage of the power transformer and the VTs, the following matching factor is used to correct the error.

$$CF_{VT} = \frac{U_{prim.,VT}}{U_{prim,Tr.}}$$

In most cases, the mismatch is very small. An inverse time characteristic is implemented with the calculated per unit value of *U/f*. The algorithm takes into account the thermal behaviour of the transformer by integrating the calculated *U/f* values. This procedure starts, if a calculated value of *U/f* exceeds the continuous-permissible threshold (*U/f* > 1.1 in most cases). A cooling down starts if the *U/f* value decreases below the *U/f* > threshold. A certain amount of *U/f* is subtracted with the passage of time depending on cooling down time-constant of the transformer. In this manner, the thermal model has a memory. The inverse time curve cannot be described by one equation. A user defined curve or several shapes of inverse time curves with time dial variations provide practical solutions. Additionally, a definite time curve gives a short time trip if the *U/f* value exceeds the maximum value. In most cases, this value is from 1.3 to 1.4 of the rated values. Figure 54 shows a tripping characteristic of a typical over-flux function.

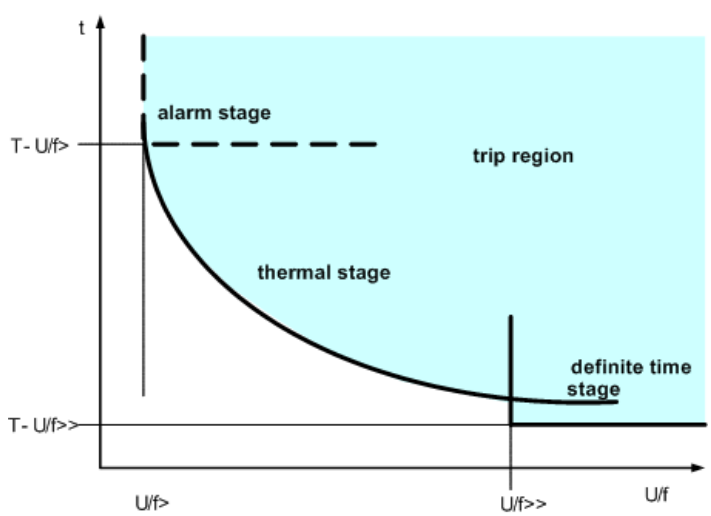

Figure 54 — A typical volts per Hertz characteristic

3.4 Negative Sequence Protection of Unit Transformers

Unbalanced load conditions or unsymmetrical faults can be detected with negative-sequence measuring devices. This measurement can also be used for an alarm indicating a phase-reversal condition.

Unbalanced load protection device is provided on the high-voltage terminals of the unit-transformer as backup for the unbalanced-load protection function of the generator. The two unbalanced-load protection functions are coordinated to avoid unnecessary stopping of the generator.

Another application of the negative sequence function on transformers is to detect overcurrent caused by an unsymmetrical fault inside and outside of the transformer protection zone. The advantage of this application is that the pickup of this overcurrent function can be set at less than the rated current of the transformer.

Currents in two phases at the terminals of the delta winding of a delta-wye transformer are 58% of the current in a faulted phase of the grounded-wye side. If the fault current is close to or less than the rated current of the transformer, a sensitive setting is required. The negative sequence function detects also asymmetrical faults inside of the transformer.

The setting of the negative sequence function on the high-voltage side of the transformer should be coordinated with the settings of this function on the low-voltage side for phase-to-earth and phase-to-phase faults. The function should be set higher than the continuous-permissible negative sequence current due to unbalanced loads. The following example provides a feel of the sensitivity (ratio of rated current of the transformer and relay pickup current) that can be achieved. A single line diagram of a Dny5 transformer used in this example is given in Figure 55. The relay is located on the high voltage side of the power transformer and the pickup value is set at 0.1 A. This is approximately 12% of the rated transformer current ($I_{N,T}$ = 16/(√3 110) = 84 A; 100%*100A/1A * 0.1A / 84 A = 12 %). The parameters of the transformer in this example are as follows.

- Rated power S_{NT} = 16 MVA
- Nominal high side voltage U_{HV} = 110 kV
- Nominal low side voltage U_{LV} = 20 kV
- CTs high side 100 A /1 A

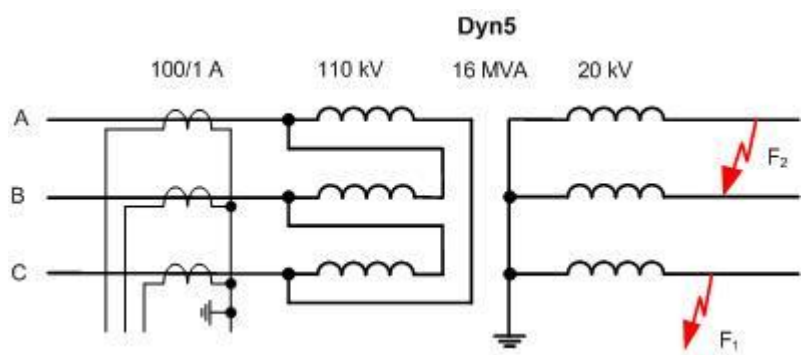

Figure 55 — Single line diagram of a 110/20 kV 16 MVA Dyn5 transformer

The minimum fault current on low voltage side that would cause the relay to operate is as follows.

(a) phase-to-earth fault:

$$I_{F;P-E} = 3 \times \frac{U_{HV}}{U_{LV}} \times \frac{I_{P,CT}}{I_{S,CT}} \times I_{2,pickup}$$
$$= 3 \times \frac{110}{20} \times \frac{100}{1} \times 0.1$$
$$= 165\ A$$

The sensitivity is as follows:

$$\frac{I_{T,N-LV}}{I_{F,P-E}} = \frac{S_{NT}}{\sqrt{3}U_{LV}} \times \frac{1}{I_{F,P-E}}$$
$$= \frac{16 \times 1000}{\sqrt{3} \times 20} \times \frac{1}{165}$$
$$= 2.80$$

(b) phase-to-phase fault

$$I_{F;P-P} = \sqrt{3} \times \frac{U_{HV}}{U_{LV}} \times \frac{I_{P,CT}}{I_{S,CT}} \times I_{2,pickup}$$
$$= \sqrt{3} \times \frac{110}{20} \times \frac{100}{1} \times 0.1$$
$$= 95\ A$$

The sensitivity is as follows:

$$\frac{I_{T,N-LV}}{I_{F,P-P}} = \frac{S_{NT}}{\sqrt{3}U_{LV}} \times \frac{1}{I_{F,P-P}}$$
$$= \frac{16 \times 1000}{\sqrt{3} \times 20} \times \frac{1}{95}$$
$$= 4.81$$

These calculations show that the sensitivity of the relay to phase-to-phase faults is higher than its sensitivity to phase-to-ground faults.

3.5 Zero Sequence Current and Voltage Protection

Break-down of insulation between a phase conductor and earth in an effectively or low impedance grounded system results in the flow of fault currents of large magnitude. A breakdown of insulation between a winding and core of a transformer causes severe damage to the windings and the transformer core due to the large magnitude of the fault current. Furthermore, high gas pressure develops that could damage the transformer tank. The magnitude of the fault current depends both on the earth-fault level, the connection group of the transformer and the location of the fault.

A sensitive earth-fault current protection that measures the residual current ($3I_0$) in the connection between the power transformer windings and the bus and the current between YN-connected winding neutrals and earth detects earth-faults on the phase conductors as well as on a large part

of the windings. The coverage depends on the grounding of the system and also on the connections of the power transformer. When used for protection of power transformer circuits, input currents used for the earth-fault protection function are one of the following two types.

— Residual current calculated from the CTs provided in the connection between the power transformer and the bus as shown in Figure 56; this arrangement detects ground faults on the delta winding of the transformer.

— Measured current in the connection between the neutral point of a winding and earth for detecting faults in the wye connected windings of the transformer.

A total ground fault protection arrangement is shown in Figure 57.

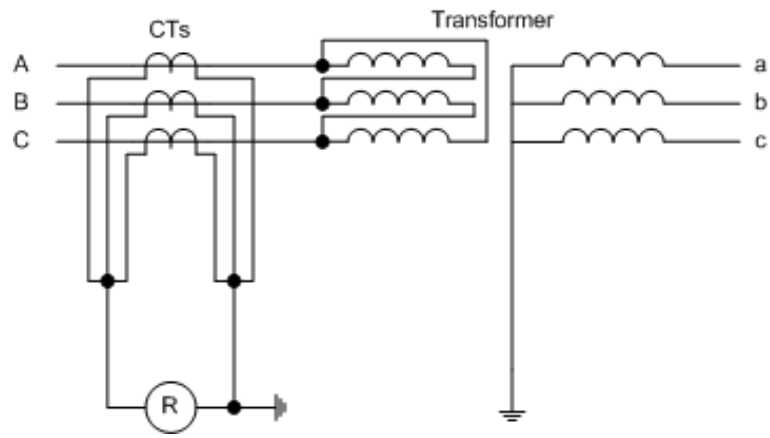

Figure 56 — Ground fault relay measuring residual current from phase CTs

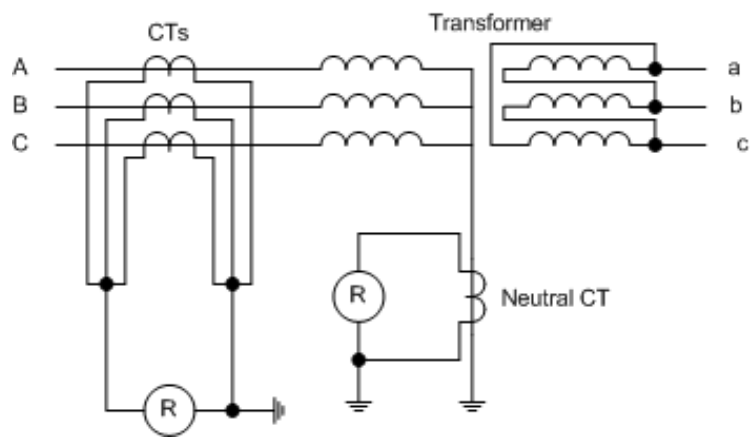

Figure 57 — Ground fault relay connected to a CT in the neutral of the transformer

3.5.1 Application

Residual current can be measured by summing the secondary phase currents from the CTs or from one CT encompassing all three-phase conductors. The residual current can also be obtained by summing the three phase-current vectors mathematically. The residual current, $3I_0$, gives rise to a residual voltage $3U_0$. The residual voltage can be measured using

— a single voltage from secondary windings of three VTs connected in open delta configuration

— a single voltage from a voltage transformer connected between the neutral point of a winding and earth in a high impedance earthed or unearthed network. Note that the input voltage in this case will be 1 x U_0.

— a three-phase voltage input and adding the three phase-voltages.

The angle between the phasors of the residual current and residual voltage can be used for distinguishing internal faults from external faults. In many applications the directional function is not selected and the zero-sequence function can be used for backup protection to detect ground faults

(a) on busbars if there is no busbar protection; this would constitute main protection for these faults,

(b) on transmission lines connected to the transformer

(c) on the transformer winding in the form of differential or restricted earth fault protection.

The backup function is delayed to allow time for the main protection to operate.

The magnetizing inrush currents contain dc components and the magnitudes of the currents in the three phases are generally different. A false residual current can result due to different saturation of the cores of line CTs. If the power transformer winding neutral is earthed, the magnetizing inrush current can have a residual current component that is measured both in the neutral connection to earth and by the line CTs. To prevent an unwanted operation, a second harmonic current blocking function is therefore used for the earth-fault current protection.

3.5.1.1 Fault current flow in network transformers

Fault current flow issue is addressed in this section.

3.5.1.1.1 Earth-faults on a phase conductor of the line of the network

A part of the fault current flows through the transformer towards a fault when a fault occurs on a phase conductor in the network. A directional earth-fault relay connected to CTs located between the power transformer windings and the bus should be used for detecting faults in the transformer and the lines connected to the transformer. The direction of current flow in the transformer neutral cannot differentiate between single-phase-to-ground faults on the transformer windings from faults in the lines connected to the transformer.

3.5.1.1.2 Earth-faults in transformer windings

Single-phase to ground faults can occur on the Y-connected winding of the transformer as well as on the delta-connected windings of a two-winding transformer.

3.5.1.1.2.1 Faults in Y-connected windings with neutral not connected to earth

A winding earth-fault, close to the terminal, results in a voltage per turn far beyond the core saturation level for the part of the winding between the terminal and the fault. The magnitude of the fault current will be approximately the same as for an earth-fault on the phase conductor. The magnetizing current will normally contain a basic frequency component of more than 70%. If the transformer also has a delta- or YN-connected winding with direct earthed neutral in a solidly earthed system, a fault current of about 10% of the phase conductor fault current can be expected for a fault 20% off the neutral. However, if the transformer has no delta- or YN-connected winding, the earth fault current decreases and can be expected to be about 10% of the phase

conductor fault current for a fault 50% off the neutral. The magnitude of the winding fault current can vary substantially from the stated figures depending on the magnetizing characteristics of the power transformer and other design factors.

3.5.1.1.2.2 Faults in Y-connected windings with neutral connected to earth

Maximum fault current flows when a fault is on the winding terminal. The current remains quite large for faults down to some few per cent off the transformer neutral. The fault current seen by an residually connected earth-fault relay decreases when the fault moves towards the neutral point of the winding. A relay measuring the current in the connection between the neutral and earth sees practically all the fault current when the fault is close to the neutral. This relay, however, is usually set at long time delays so that it coordinates with the earth-fault relays in the network.

3.5.1.1.3 Measured quantities

All earth-fault measurements can be configured by a protective relay to any single-phase or three-phase current input. The directional function can be configured to any single-phase or three-phase voltage input. The residual current or voltage is calculated mathematically in digital relays from the three phase input.

3.5.1.1.4 Settings of earth fault relays

3.5.1.1.4.1 Relays connected to the delta connected windings

A high set relay, set to 1/3 of the minimum fault current for an earth fault on the winding terminal would detect faults on phase conductors between the CTs and the winding as well as on the windings. A low set stage, set at 10% of minimum fault current for an earth fault on the winding terminal, can be used to detect developing faults. A long inverse time delay is generally used. Second harmonic blocking is recommended for both stages if the winding is connected to a network with power generation.

3.5.1.1.4.2 Relays connected to Y-connected windings

A high current element normally cover more than 50% of the winding and a low set stage normally cover about 80% of the winding if the power transformer also has a delta-connected or direct earthed YN-connected winding and if the settings are the same as the settings for the relays connected to the delta windings described in Section 3.5.1.1.4.1. About 50% of the windings of YY connected transformers will normally be protected. Second harmonic blocking is recommended for both stages if the winding is connected to a network with power generation.

3.5.1.1.4.3 Y0-connected windings

Residual currents flowing in the windings due to imbalance in the network must be taken into consideration when setting ground fault relays. Directional function should be selected when the relay is connected to residually-connected CTs located between the bus and the transformer windings.

The time/current settings of relays that measure the current in the connection between the neutral and earth should be coordinated with the earth-fault relays in the network.

3.6 Earth Fault Protection (Tank Protection)

The transformer is placed on an insulated platform that is connected to ground through one or more leads; a CT is provided to measure current to ground in each lead. Current flows from a winding or terminal to the tank if the insulation breaks down. This current depends on the network configuration and on all parallel connections between tank and ground as well. Tank protection is only applicable to power transformers in low-impedance grounded networks where the neutral grounding impedance does not limit the ground fault current to low levels compared to the nominal current of the power transformer. Preconditioning several precautions for the installation of this protection are applicable as well when ground faults in the cable connection between power transformer and bus bar occur.

Parallel circuits, whose influence depends on the grounding scheme of the associated substation, are important for the tank protection. Only basic aspects for optimal effectiveness of this kind of protection are detailed in this section. The aim is to limit the current that does not flow through the ground fault protection circuit by isolating all metallic components that are normally connected to the tank. These components are for example, cable shields, oil conservator, drive machinery for valves, pipes for fire protection and rails on which the power transformer is erected.

The rails are cut at each end and are isolated by setting the holding-down bolts in the concrete foundation without any contact to the reinforcement or by fixing the rails on wooden ties. The tank is grounded at a certain location by a conductor where a CT measures the tank to ground current as shown in Figure 58. An instantaneous overcurrent element of a protective relay connected to the CT performs a trip command in case of a break-down of the insulation between a winding or terminal and the tank. This measuring principle provides fast unit protection based on a very simple arrangement.

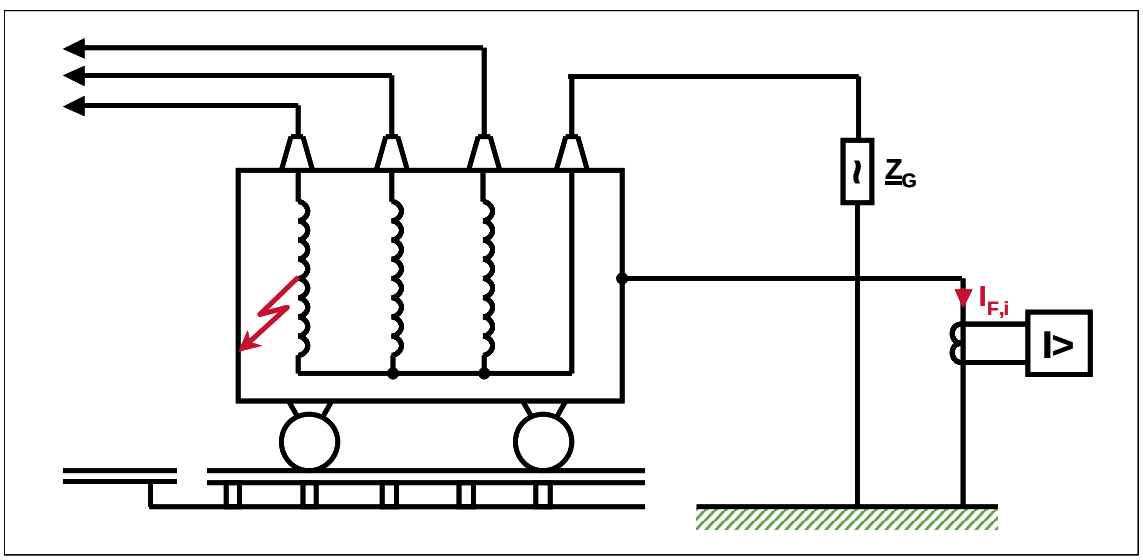

Figure 58 — A transformer insulated from ground and protected with an overcurrent ground fault relay.

The protection scheme should not initiate a trip in case of an external phase to ground fault. Figure 59 illustrates the different elements that are involved in that case. $R_{G,l}$ is the leakage resistance of the tank, $R_{G,c}$ is the ground contact resistance and Z_G is the neutral grounding impedance.

The neutral displacement voltage that appears in case of an external phase to ground fault is the source voltage for a current flowing through the protection circuit. The amount of this current is proportional to the ratio given by the ground contact resistance $R_{G,c}$ to the leakage resistance R_{Gl} of the tank as shown in Figure 60.

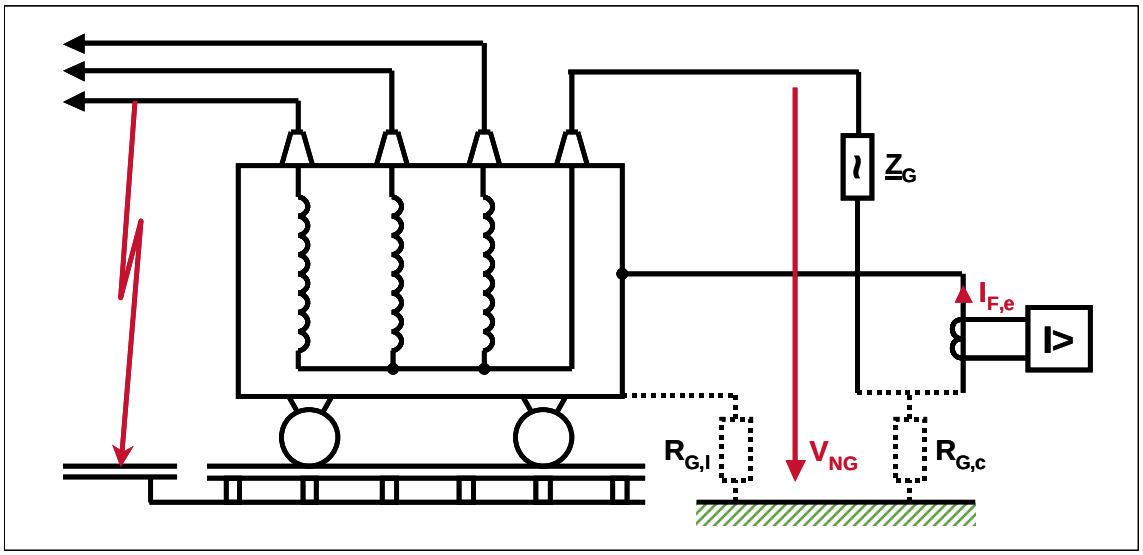

Figure 59 — Behaviour of ground fault protection during an external fault

$$I_{NG} = \frac{V_{NG}}{Z_G + R_{Gc} \parallel R_G1}$$

and

$$I_{F,e} R_{G1} = (I_{NG} - I_{F,e}) R_{Gc}$$

For Z_G, $R_{G1} >> R_{Gc}$

$$I_{F,e} = \frac{V_{NG}}{Z_G} \frac{R_{Gc}}{R_{G1}}$$

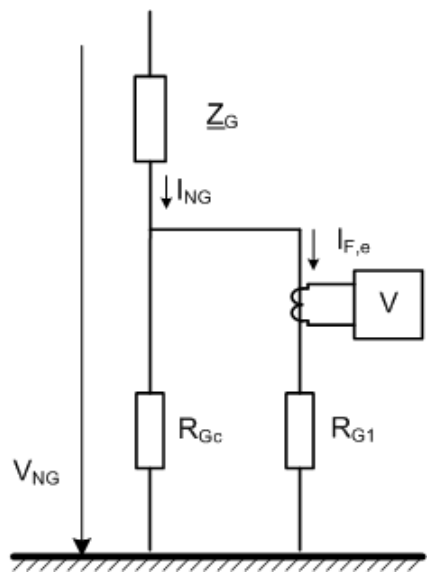

Figure 60 — Voltage applied to the relay during an external ground fault

The current flow in case of an external phase to ground fault should not operate the tank protection. The pick-up value of the instantaneous overcurrent element is therefore set above the absolute value of this current. In other words, the ratio of ground contact resistance R_{Gc} to leakage resistance R_{Gl} should not exceed a certain value regardless of atmospheric conditions (e.g. snow coverage etc.). Furthermore, this resistance ratio should not increase with time. Effectively, this ratio determines the zone of the winding that is protected by the tank protection scheme.

Maximum sensitivity of tank protection is usually 30 A. Tank protection fits 20 kV networks with ground fault currents of 300 A but is not suitable for networks with limited ground fault currents as given for instance in 5.5 kV industrial networks with ground fault current limited between

15 A and 50 A. A restricted earth fault protection scheme should be considered for these applications.

Application of tank protection is widely used in France, some African countries and some other countries. Figure 61 shows a 16.67 Hz CT in its housing for tank protection used in a transmission system for an electric train:

Figure 61 — A transformer with tank protection CT for a railway system

3.7 Neutral displacement in solidly grounded systems

EHV networks usually are solidly grounded to limit the insulation level needed for the installed equipment. In a solidly grounded system, the phase-to-ground voltage of the healthy phases increases by a maximum of 40 % compared to the phase-to-earth voltage that would be experienced if the system were not grounded. The levels of ground fault currents are dictated by the size and number of power transformers whose neutrals are grounded. To prevent the increase of ground-fault currents due to increased system meshing, only as many neutrals are grounded as the restriction of earth fault factor $\delta \leq 1.4$ allows. For this purpose power transformers are frequently equipped with switched star-point grounding as shown in Figure 62.

In practice, a situation may exist that can be represented by a reduced level system shown in Figure 63. The circuit from Substation ‘a’ to Substation ‘b’ is disconnected and in the event of a fault on the line from Substation ‘b’ to ‘c’ ground fault currents would flow via the neutral of the transformer connected to Bus ‘c’. No ground currents are experienced at the ‘b’ end of the line. The consequence is an exceptional current routing via the healthy phases; the phenomenon is known as ‘Bauch Paradoxon’.

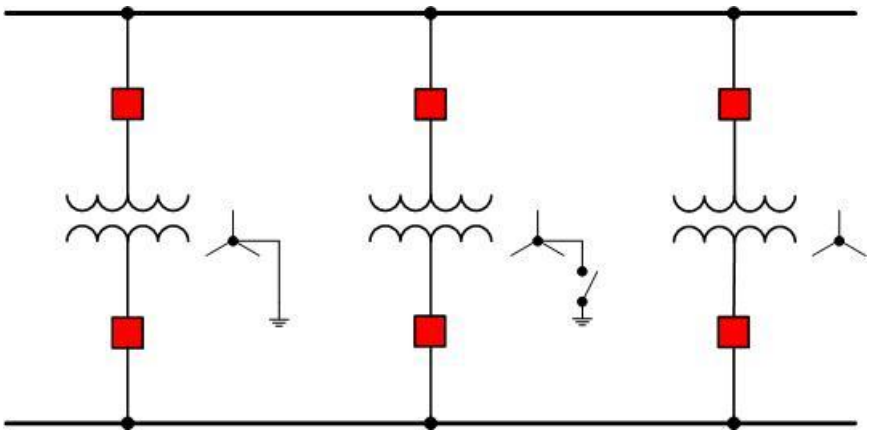

Figure 62 — Transformers with solidly grounded, switched grounded and ungrounded neutral connections

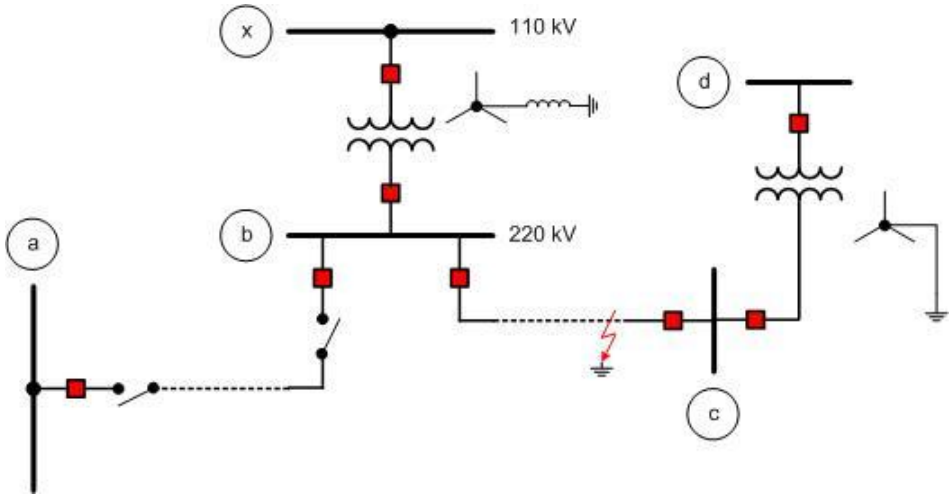

Figure 63 — A system containing transformers with grounded and ungrounded neutrals

If auto-reclosing following a trip decision is applied and the distance relays overreach due to weighting of residual current (zone extension), relay at bus 'b' may not trip for a fault close to Substation 'c' and therefore single-pole auto-reclosing will not succeed. Distance protection at end 'c' would then trip definitely after an unsuccessful auto-reclosing.

Distance protection can overreach also by bypassing the timer of zone-2 (zone acceleration) or due to the extension of the set zone reach used in numerical distance devices. In case of a permanent earth fault, this method of overreaching would disconnect end 'c' only after unsuccessful auto-reclosing at both ends.

After the disconnection of the circuit at end 'c', the remaining network connected to substation 'b' does not have a ground. Therefore, a ground fault on this system would not cause sufficient fault currents for the short-circuit protection to work properly. The phase-to-ground voltage of the healthy phases would increase by a factor of $\sqrt{3}$; this would endanger the power transformer due to excessive voltage stress. Therefore, in solidly earthed networks protection against neutral displacement should be applied in the following cases:

— The winding of the power transformer has no neutral (delta winding) and is not directly connected to a grounding transformer.

— The winding of the power transformer has a neutral that is not grounded.

— The winding of the power transformer has a switchable neutral for grounding.

Neutral displacement voltage can be derived by connecting the secondary windings of the voltage transformers in open delta or, alternatively, by summing the three phase-to-ground voltages in the relay. An overvoltage element determines the phase displacement and if it exists, initiates an appropriate trip.

3.8 Overcurrent Protection

Transformers of less than 10 MVA size used in transmission and distribution networks are usually protected by fuses and overcurrent relays. Overcurrent relays are also used for backup protection of transformers. Because mandate of CIGRÉ is high voltage networks, protection of distribution networks will not be addressed in detail in this report.

3.8.1 Protection with Fuses

Protection of transformers with fuses has been addressed in Section 1.10. Some additional comments are included here.

High voltage fuses for use in systems rated up to about 138 kV are now available. The current ratings of the fuses range from 3 A to 250 A. The fuses now available provide precise operating characteristics and, therefore, allow coordination with up-stream and down-stream devices. At the low end (<10 A rating), the fuses are usually made of chrome-nickel alloys under tension and the fuses of higher rating are usually helically coiled silver wires. The fuse wires are intended not to operate due to overloads but, in practice, the fuse ratings are selected higher than the expected load currents. Because the fuses usually take substantial time to blow even at three times their rated currents, they would not protect transformers adequately. This is explained by an example in the following section.

3.8.1.1 Fuse application example

Consider a three-phase 1 MVA transformer connected to a 72 kV subtransmission network. The rated current of this transformer is 8 A. Now consider that fuses rated at 13 A are used to protect this transformer. Depending on the type of fuse that is selected, it could take up to 8 seconds for the fuse to melt if the current in the circuit is 32 A; this is four times the rated current of the transformer. The function of the fuses in such applications is, therefore, to isolate the transformer in case of faults on the high voltage terminals of the transformer and to provide backup protection for faults on the circuits connected to the secondary windings of the transformer.

3.8.1.2 Protection with Overcurrent Relays

Overcurrent relays are used as well for primary protection of distribution transformers instead of fuses. Like fuses, these relays are set so that they do not operate on moderate overloads. These relays, therefore, do not provide adequate primary protection from faults in the transformer.

Differential protection, restricted earth fault protection and Buchholz relays provide primary protection of network transformers. These relays do not protect a transformer when a fault is on the transformer terminals if CTs used for differential protection are installed in the transformer bushings. Additional backup protection is, therefore, needed; overcurrent relays are usually used for this purpose. These relays also provide backup protection from network faults outside the transformer.

3.8.1.2.1 An example

Consider the system shown in Figure 64 for illustrating the need of local backup protection of network transformers.

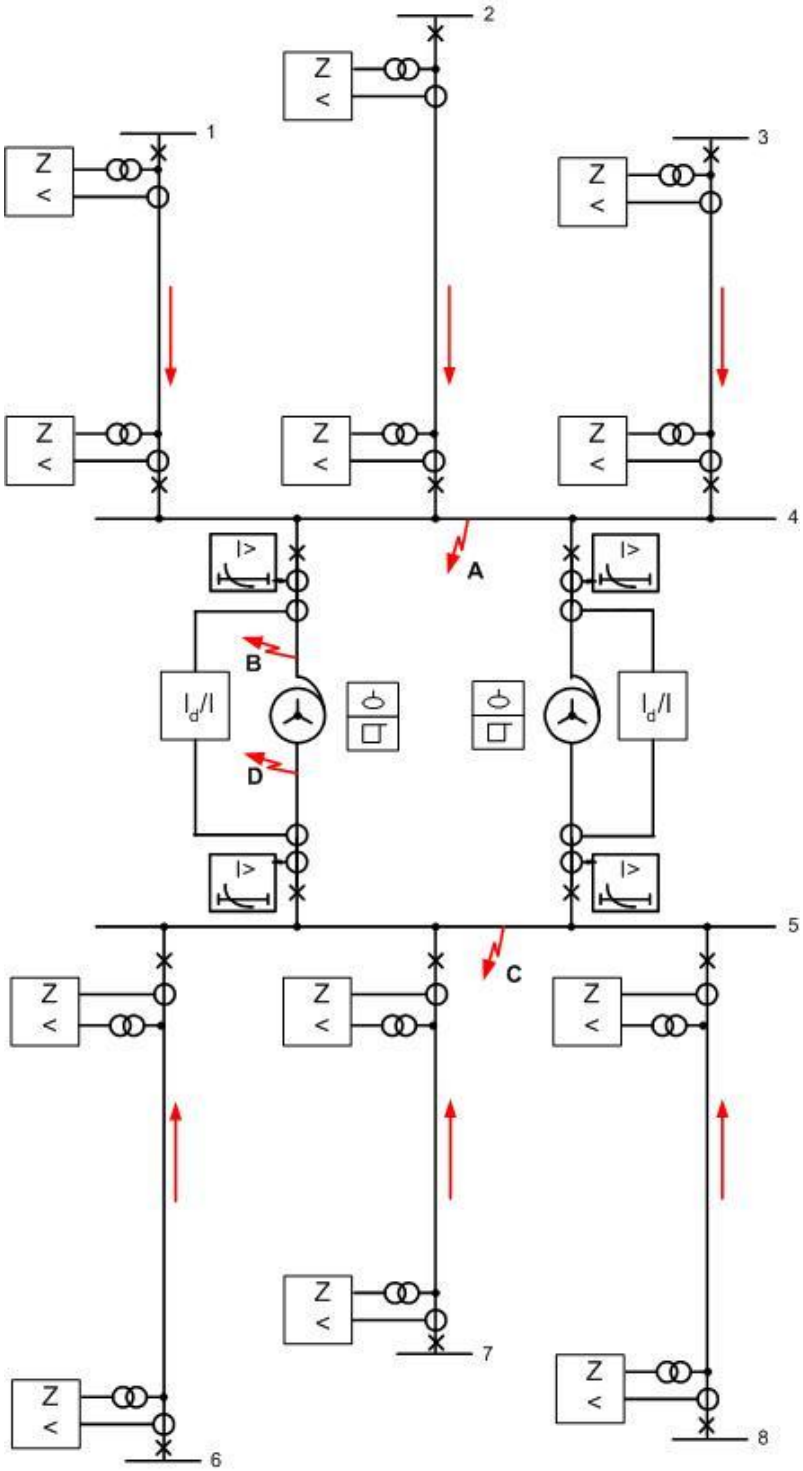

Figure 64 — Sample system illustrating the need for local backup protection

Differential relays protect transformers when a fault is experienced in their protection zone. Line protection relays at the remote buses would provide backup protection if no local backup protection is provided. Consider a fault at location B in Figure 64. In the absence of local backup protection, line protection relays at buses 1, 2, 3, 6, 7 and 8 would provide backup protection. This may not be acceptable due the several reasons; one important reason is that the two networks would be disconnected at this substation. A serious issue is that the fault currents seen by line protection relays at buses 6, 7 and 8 might not be sufficient to provide backup protection in reasonable time.

Now consider a fault at location A. Busbar differential protection would isolate Bus 4 and backup protection will be provided by line protection relays at buses 1, 2, 3, 6, 7 and 8 if there are no backup-protection relays for the transformers. Providing overcurrent relays for backup protection of the transformers connecting buses 4 and 5 also provide backup protection for bus faults.

3.8.1.2.2 Application considerations

In most cases overcurrent relays are applied on all sides of network transformers. Overcurrent relays are needed on both sides of a two-winding transformer if there are fault current in-feeds from the network connected to both sides of the transformer. It is still a good practice to provide overcurrent relays on both sides of a single transformer if there is no source connected to the LV side. The backup relay on the low side of the transformer in this case should provide backup protection for the low-side bus and line protection devices.

Overcurrent relays can be inverse time or definite-time delay types. Sometimes instantaneous overcurrent relays are also provided. Instantaneous trip units are set at a level that is higher than the maximum inrush current that might be experienced by a transformer as well as higher than the maximum short circuit current on the low voltage bus. These units are typically set in the range of 8 to 13 times the rated current of the transformer. Because of their short operating time, they provide high speed protection for severe internal faults.

Instantaneous overcurrent relays are also provided for ground faults on the load side of the transformer. These relays are coordinated with the upstream instantaneous relays. The time delayed overcurrent relays are provided to provide protection in case of failure of other relays to detect faults. These relays are set at approximately one-half of the rated current of the transformer and coordinated with other relays on the system to avoid undesired trippings.

The selected time delay should coordinate with the time delays of downstream and upstream relays. Mixing definite time and inverse time overcurrent relays is not a good solution. Generally speaking the inverse time relays are most commonly used. The exception is when the overcurrent relays have to be coordinated with distance relays.

3.8.1.3 Protection with instantaneous overcurrent relays

Backup protection of a transformer can also be provided by using instantaneous overcurrent relays provided at all terminals of a transformer and set to detect abnormal currents due to faults in the transformer and the networks connected to the transformer. Backup protection of a two-winding transformer is described in Section 3.8.1.3.1.

3.8.1.3.1 Protection of a two-winding transformer with instantaneous overcurrent relays

Instantaneous overcurrent relays can be used for backup protection of, for example, two-winding transformers that have energy sources connected to one of the windings only. Energy sources are

connected to Bus A shown in Figure 65; no energy sources are connected to Bus B. Primary protection is provided by the differential relay. Two instantaneous relays, one on each side of the transformer, are provided. The instantaneous relay provided on the Bus A side of the transformer is set to detect faults in the transformer and on Bus B and beyond. The relay provided on the Bus B side of the transformer is set to detect faults on Bus B and circuits emanating from Bus B.

The trip logic isolates the transformer if the instantaneous overcurrent relay provided on the Bus A side operates but the instantaneous overcurrent relay provided on the Bus B side does not operate. Operation of only the instantaneous relay provided on the Bus A side indicates that the fault current is due to a fault in the protection zone of the transformer. In the event of external faults, either both instantaneous relays would pickup or only the instantaneous relay provided on the Bus B side of the relay would pickup. The logic does not trip the transformer if the instantaneous relay provided on the Bus B side operates. The operation of the relay provided on the Bus B side of the transformer can be used to backup protection systems of the outgoing circuits connected to Bus B.

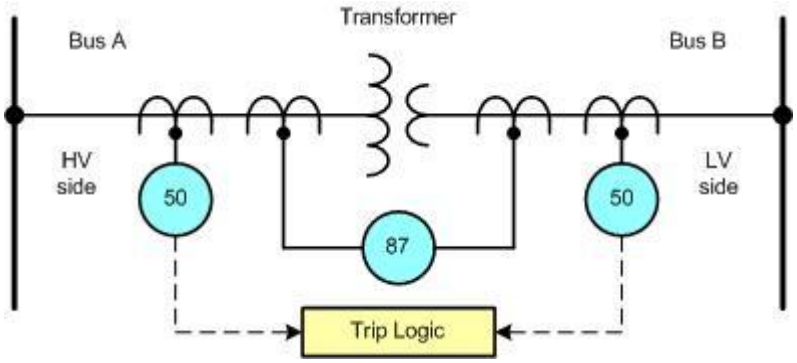

Figure 65 — Backup protection of a transformer with instantaneous o/c relays

3.8.1.4 Need for directional overcurrent relays

The transformer overcurrent protections need not be directional if sources of energy are connected to more than one winding of the transformer. Figure 66 shows an example with two identical transformers, each transformer with an overcurrent relay on the HV side as well as on the LV side.

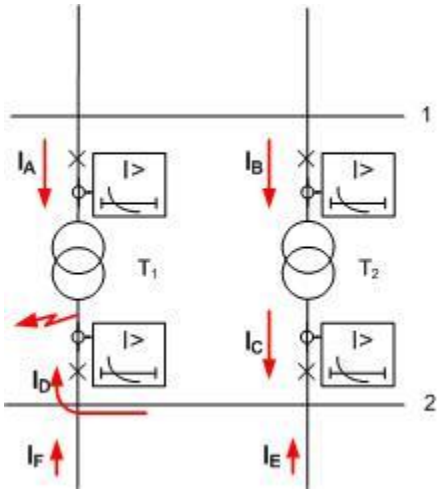

Figure 66 — Need for directional overcurrent relays for backup protection

As a first case, assume that the sources on both the HV and LV side are strong. This will make the fault current I_D (= $I_C + I_E + I_F$) much greater than I_C. In this case selectivity can be achieved with non-directional inverse time relays. Now assume that the source on the LV side of the transformers is weak. The currents I_E and I_F would be small making $I_D \approx I_C$ and selectivity will not be achieved unless the LV relays are directional overcurrent relays.

3.8.1.4.1 Current settings of overcurrent relays

The transformer vector group should be considered when overcurrent relays provided for transformer backup protection are set. A delta wye transformer is considered as an example to illustrate the issue. Consider a phase to phase fault on the wye side of the transformer as shown in Figure 67. If the voltage ratio from delta to wye side is unity, the number of turns of the delta winding would be √3 times the number of turns on the wye side. Therefore, the currents in the delta windings and currents in the phases connected to the delta winding would be as shown in Figure 67. Note that the current in one of the phases is twice as much as the current in the other two phases. When deciding the pickup values for overcurrent relays, special attention is needed if overcurrent relays are used in only two of the three phases. In these cases, the lowest occurring short circuit current should be used so that the overcurrent relays always pickup for phase to phase faults.

It is important to appreciate that the fault current for a phase-to-phase fault is less than the fault current for a three phase fault at the same location. For transformers away from generating stations, the fault current for a phase-to-phase fault would be 0.866 times the fault current for a three phase fault. This information should be used to correctly determine the settings of the overcurrent relays.

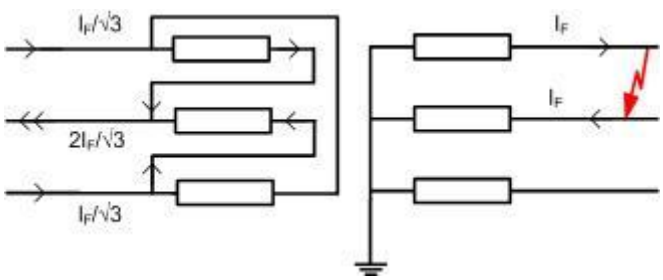

Figure 67 — Current flows in a delta/wye transformer with a phase-to-phase fault on the wye side

3.9 Distance Protection

Faults within the tank of medium or large sized power transformers can be detected by a combination of Buchholz relay described in Section 3.11 and differential protection. A substation local back-up protection is provided by using different detection criteria and principles.

Faults outside the tank, but within the protected zone, cannot be detected by the Buchholz relay. Additional protection such as overcurrent protection or distance protection is applied for back-up protection for in-zone faults that are outside the transformer tank. When transformers are connected in parallel, distance protection can be used on the low-voltage side because distance protection operates selectively.

Figure 68 shows a fault on low-voltage side of the power transformer on the left. If the differential protection of the transformer fails to clear the fault, it will be cleared selectively by the first-zone of the distance protection that is looking into the transformer.

As explained in section 3.8.1.2, transformer overcurrent protection is the most common backup protection for external, and to some extent also internal, phase-to-phase and three phase faults.

Distance protection or a simple under impedance protection sometimes replaces the overcurrent protection on larger transformers interconnecting transmission networks for two reasons. Firstly, the short circuit current from the LV side of the transformer, in case of a fault on the HV busbar, will not be enough for overcurrent protections to pick up. This situation can arise typically in a substation with 3 or 4 transformers in parallel, if the short circuit current of the LV system is not very high. Although the transformers might be large, the division of the short circuit current between them makes only part of the total fault current flow through each transformer. Secondly, coordination with distance protection will often be complicated and, to some extent, unreliable because the reach of the over-current protection depends on the fault current magnitude.

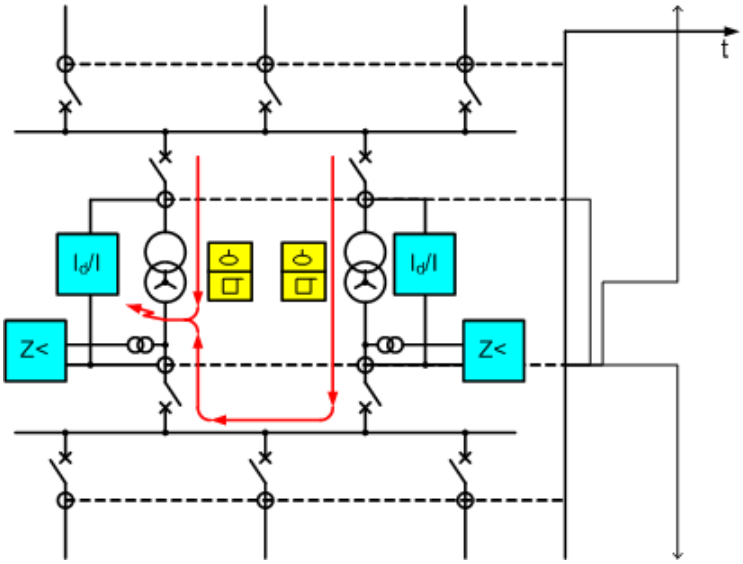

Figure 68 — Selective protection of two transformers operating in parallel

Figure 69 shows how distance protections for the transformers can be arranged. In this case two forward-looking zones and two reverse-looking zones are used.

For the first zone in one direction, the setting always covers the busbar with at least 20% margin. The maximum reach for this zone shall be shorter than the zone 1 of the distance protection of the shortest outgoing line connected to the same busbar; the time delay is made equal to the time delay of zone 2 of the distance protection. The second zone with the same direction is set so that it does not reach beyond the zone 2 of the distance protection of the shortest outgoing line. The time delay is set equal to the time delay used for the zone 3 of the distance protection. The two zones in the opposite direction are set in a similar way.

If there are overcurrent protections on the lines instead of distance protections, e.g. on the LV side of the transformers, only one zone would be sufficient for the transformer distance protection in that direction (reverse direction in Figure 69). This is because a second distance protection zone would in most cases be difficult to coordinate with line protection. For the zone directed towards the LV busbar, the setting should always cover that busbar with a reasonable margin. At the same time, it must coordinate in both reach and time delay with the overcurrent relays of the outgoing lines on that busbar.

The possible transformer impedance variation due to on-load tap-changer positions should be considered when calculating the settings for the zones that reach through the transformer,

So far, distance protection as backup for phase-to-phase and three phase faults has been considered. Distance relays with only phase-to-phase measuring elements should be used in these applications. However, distance protections with ground fault measuring elements can be used on transformers as well. Special attention is needed when setting the residual compensation factor $k_0 = \frac{1}{3} \times \frac{Z_0 - Z_1}{Z_1}$ in these cases. This factor compensates the measurement in such a manner that the impedance seen by the relay is the same for ground faults as it is for phase-to-phase faults. The calculation of k_0 for transformer applications is however more complicated than for lines because the zero sequence impedance of an autotransformer with a delta winding is a three pole element.

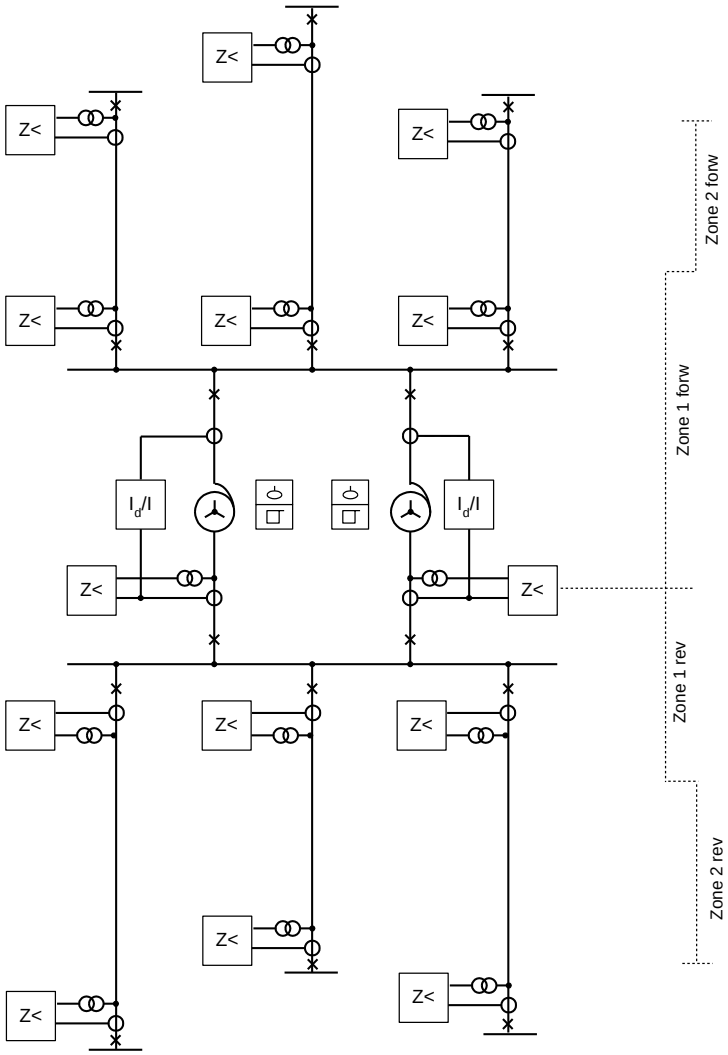

Figure 69 — Distance protection applied to protect a transformer and network lines

As an alternative to distance protection, a simpler solution is to use an under-impedance relay. The relay should have two individually settable zones; one non-directional zone should be looking towards the forward direction and the other non-directional zone should be looking towards the reverse direction. To achieve the same reach for phase-to-phase faults and 3-phase faults, the relays should be connected to line-to-line voltages and line-to-line currents, for example U_R-U_Y and I_R-I_Y, U_Y-U_B, and I_Y-I_B, and U_B-U_R and I_B-I_R.

In these cases, autotransformers have been assumed because this is the most common application for distance protections on transformers. However, if another vector group is considered, e.g. a

generator step up transformer, it shall be remembered that the phase shift in a Y/D transformer results in different zone reach by distance protection for phase-phase and 3-phase faults.

3.10 Application of multifunction numerical relays

Technology used in relays applied for transformer protection has evolved from discrete electromechanical relays and static relays to digital multifunction protection systems. A lot of protection schemes in service today are single function discrete electromechanical or static relays that have a long history of providing reliable protection. These devices continue to be applied in many applications. However, digital multifunction protection systems (MPS) are now being incorporated into most new protection systems because of their availability, ability to perform most functions, economic advantages, and increased reliability. In most cases, new transformers are being protected with either dual or single multifunction transformer protection systems possibly backed up by some single function relays.

Because of the advantages of digital technology, MPSs are being retrofitted on older transformers either to replace the discrete component electromechanical protection schemes, to augment existing protection systems or to add protection functions that were not used on the older transformers.

The additional functions that have been become available with the digital technology metering, oscillography, sequence of events capture with time tagging, remote setting and monitoring through communications, user configurability of tripping schemes and other control logic. In spite of these additional functions, the required panel space and wiring is less than needed with the previous technologies, the burden on the VTs and CTs is substantially reduced while the systems have an ability for continuous self-checking.

Figure 70 shows the block diagram of a typical multi-function protection system. The system has analog inputs (currents, voltages, temperature etc), binary inputs, contact inputs for switch status use in the control circuits, and contact outputs for sending trip and alarm signals. An MPS may also have bi-directional communication ports which may use electrical or optical interfaces and protocols, such as RS-232, RS-485, RJ45 (Ethernet) on copper wires, on fiber optic cables or on some other hardware interface for communicating with other devices in the substation and outside the substation. Internal hardware consists of an analog data acquisition system which includes signal scaling, isolating, filtering (anti-aliasing) analog multiplexing, and analog-to-digital converting. The digital subsystem consists of a microprocessor, flash memory for program storage, random-access memory (RAM) for temporary storage of information, and electrically erasable programmable memory (EEPROM) for storage of set points.

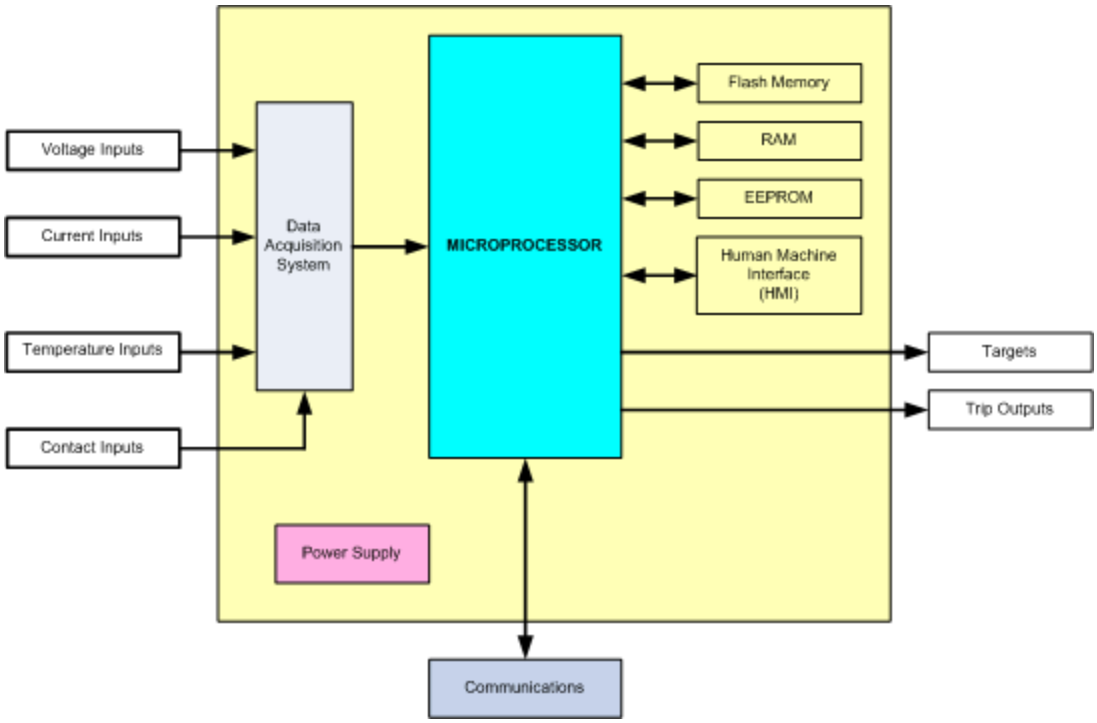

Figure 70 — Block diagram of a typical MPS

The operation and performance of these systems are determined by the hardware of the system and the software-programs used to perform the protection functions. Digital signal-processing algorithms are used to filter the voltage and current inputs and calculate the parameters required for the relaying functions. The relay logic program compares the set points to the calculated parameters and implements the required time delay characteristics. The software program also implements other features such as communication, oscillography, event recording, and local interface with the user.

3.10.1 Typical application showing protection functions

Protective functions traditionally provided by individual component relays for transformer protection and now integrated into MPS packages include two or more of the following:

- Transformer Differential (87T)
- Restricted earth fault or ground differential protection (87GN)
- Instantaneous and inverse time Overcurrent (50/51)
- Ground instantaneous and inverse time Overcurrent (50G/51G)
- Current Unbalance/Negative Sequence (46)
- Over-excitation (24)
- Under-voltage (27)
- Over-voltage (59)
- Under-frequency (81U)
- Thermal Protection (49)

— Breaker failure (50BF)

The numbers in the parenthesis in the list represent ANSI device function numbers. Function numbers 27 and 81U are used for load shedding on distribution transformer applications. Function 46 is used to provide sensitive backup for phase to phase faults on a distribution feeder. A one-line diagram showing typical protection functions included in a multifunction transformer protection system is shown in Figure 71.

Traditional applications of transformer protection systems consisted of separate relays performing different functions with some overlap and backup where appropriate. In many cases, transformer differential relays were connected to dedicated sets of CTs due to reliability, burden, and CT characteristic matching issues. The low burden of an MPS allows connection of differential and other monitoring, measuring and protection functions to the same set of CTs without adversely affecting the performance that increased CT burden caused when previous technologies were used. The use of single set of CTs is a concern to many application engineers because CT inputs are not duplicated in this scheme resulting in lower reliability. However, if two multi-function protection systems are applied, two separate sets of CTs and VTs could be used to provide inputs to them; this would achieve redundancy of protection and input systems.

Failure of an MPS may require that the transformer be taken out of service. In the MPS, self-test and diagnostics detect many failure modes and alert the user through alarm outputs. The ability to detect and correct a failure before the protection system needs to operate is a contrast to traditional protection system in which a relay failure would not be detected until the next maintenance test or until the relay caused a false trip or failed to operate correctly during an event.

The user has a number of choices on what protection function to include in each MPS if two MPSs are applied. Each MPS has its own separate dc-to-dc power supply and tripping circuit. The built-in self-monitoring and diagnostic functions are always on-line and detect many relay failures, thereby reducing the likelihood of false operation. Periodic testing and preventive maintenance may be reduced to a minimum because only the items and responses not fully covered by the self-monitoring and diagnostic functions need to be checked. The status of each MPS may be determined by the station control system by cyclically interrogating the diagnostic function via the communications link. This confirms that the self-monitoring system is working and the protection is available.

3.11 Buchholz relay

A gas accumulation relay that was first developed by Max Buchholz in 1920's is a device provided on oil filled transformers; this device is meant to protect the transformer in the event of a fault in it. This relay is now known as Buchholz relay. Later designs of this relay include the feature of detecting sudden surge of gases produced during a fault in the transformer. A typical device, shown in Figure 72, is mounted between the transformer tank and its oil conservator tank.

Material, such as insulation and oil, used in a transformer disintegrates when an incipient fault occurs in the transformer. By-products of disintegration process include gases that accumulate in the relay. This process, in many cases, starts well before changes in transformer currents and voltages occur. Buchholz relays are, therefore, used for detecting incipient faults as well as for backup protection of transformers that are equipped with conservator tanks.

The upper float of the relay shown in Figure 72 drops down as the accumulation of gases progresses; this is shown in Figure 73. The drop of the upper float opens a contact that initiates an alarm alerting the operating staff to look into the problem and address it. These relays also

detect excessive loss of cooling oil in the conservator tank of the transformer in addition to the detection of gases produced in the transformer.

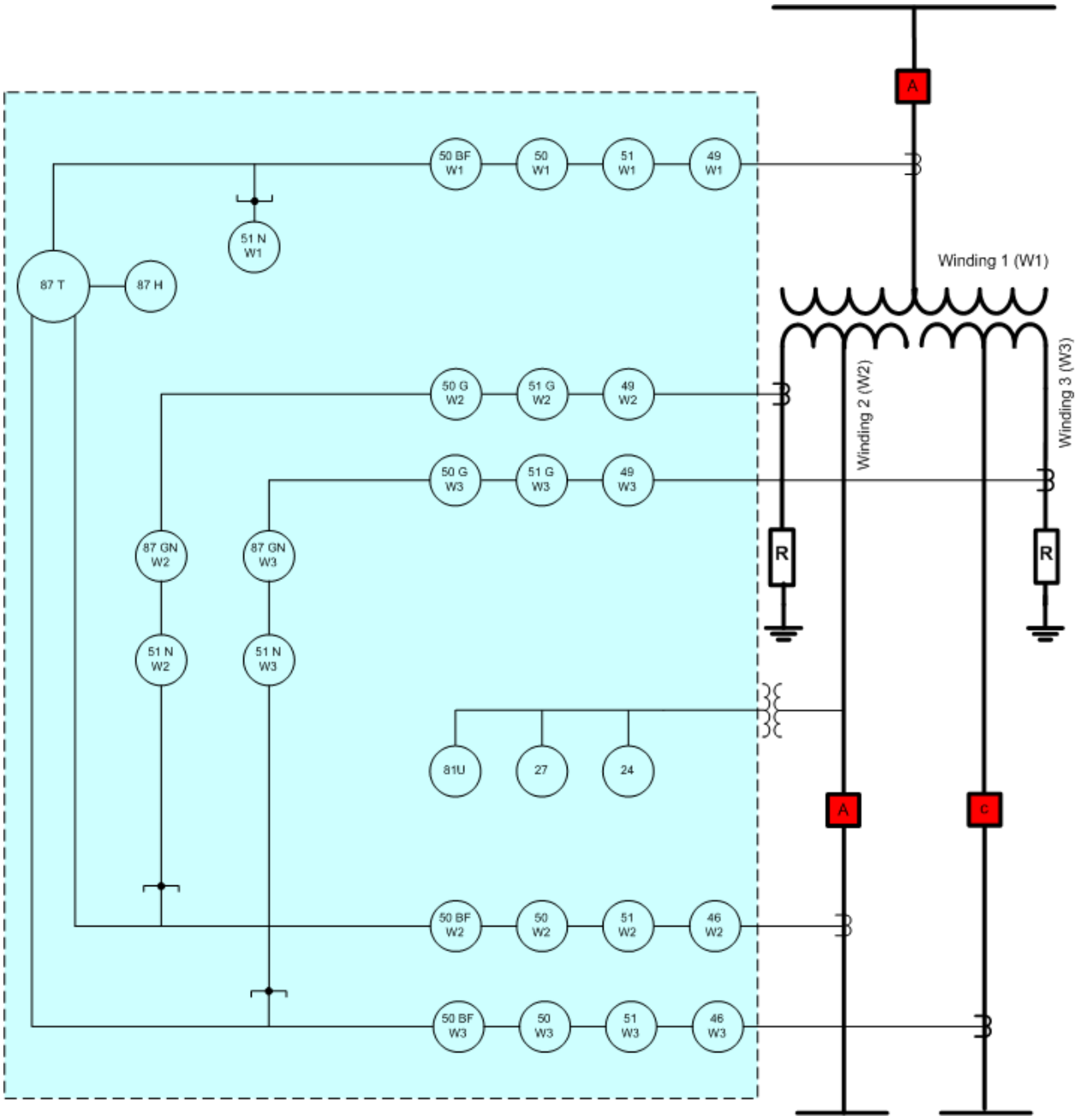

Figure 71 - Single line diagram of a typical three winding transformer protection system using MPS (possible functions are shown but all those are not in parallel)

Large quantities of gas are produced when an arc due to an electrical fault occurs in the transformer. The gas surges up towards the conservator tank and on its way, it drops the lower float closing a contact that opens the circuit breakers to remove the transformer from service.

Most recent designs of Buchholz relays are equipped with facilities for collecting samples of the accumulated gases so that they may be analyzed and the nature of fault may be estimated. A provision for injecting dry air in the Buchholz relay is also made so that the operation of the relay

may be tested. Another provision that exists in Buchholz relays is to allow a technician to take a sample of the oil and test it for the integrity of its insulating properties.

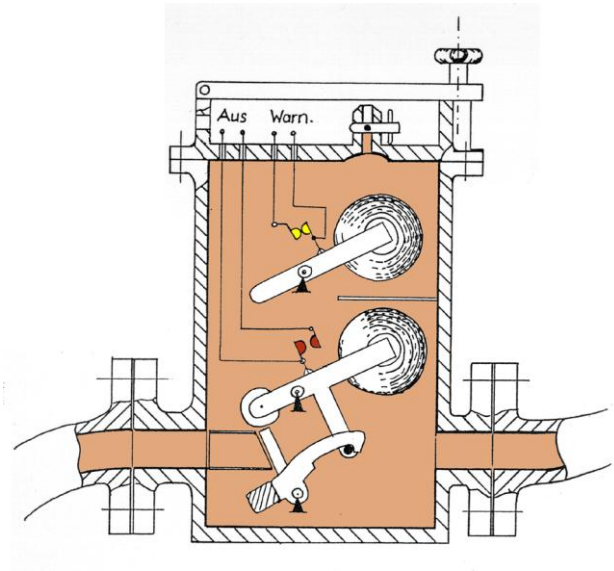

Figure 72 — A Buchholz relay during normal operation of a transformer

3.11.1 Sudden pressure surge relay

A relay that detects sudden change of pressure in the transformer tank is generally provided on sealed transformers. The relay operates on the rate of rise of oil/gas pressure inside the transformer tank.

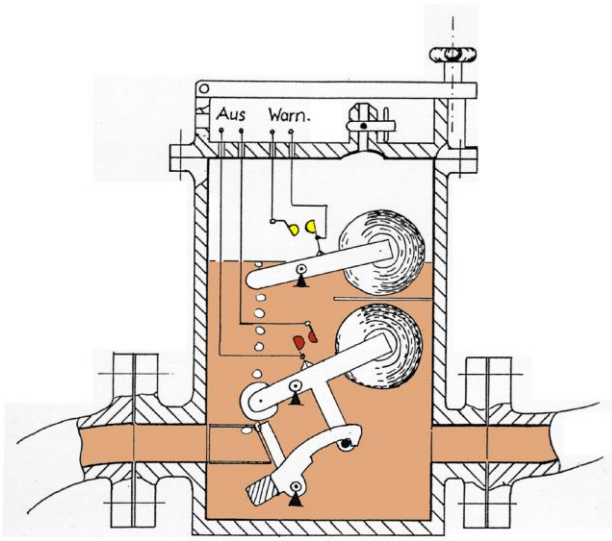

Figure 73 — Buchholz relay operated due to accumulation of gases in the relay

3.12 Thermal Overload Protection

The loading of a transformer is usually monitored by relays that model heat generation in the transformer and its dissipation through the cooling system. A simple implementation of thermal

protection consists of a temperature relay set to trip if the hot spot temperature of the transformer winding exceeds a set value defined by well known standards or by limits specified by the utility.

Most power transformers are equipped with on load tap changing capabilities. This furthe complicates the thermal protection scheme. Depending on the designed construction of the transformer and the tap changer location higher loading on some taps may occur. The thermal protection should be applied to the winding in which maximum overload current compared to its nominal rating is likely to flow.

The deterioration of transformer insulation with the passage of time is the main cause of short-circuits in equipments of the networks leading to substantial economic losses. The process of insulation deterioration is a complex phenomenon (of chemical, thermal, mechanical nature, etc.) and has to be continuously monitored through various means and methods. A schematic of a typical numerical thermal protection system is shown in Figure 74.

3.12.1 General

Thermal stress due to heat accumulation is one of many factors that can damage insulation. Copper losses, given by I^2R, in the winding when current flows through the transformer cause the transformer temperature to increase. The insulating material surrounding the conductors carrying current age rapidly if the temperature exceeds the value used during the design process.

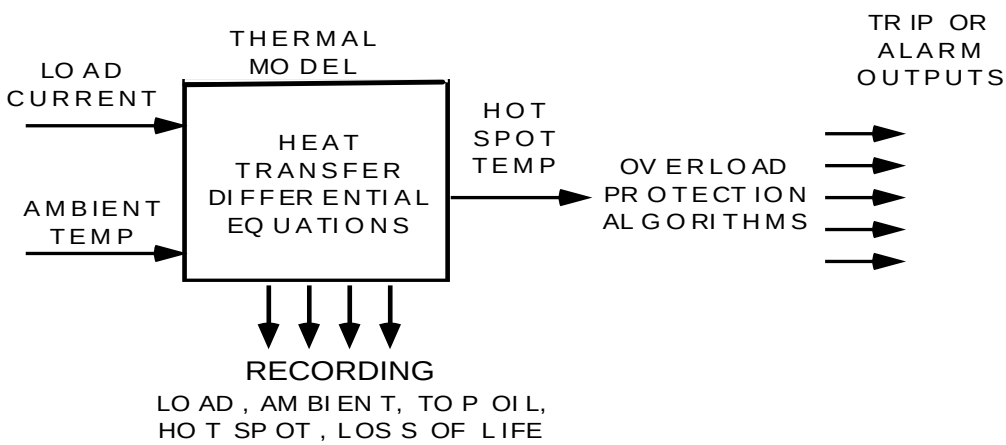

Figure 74 — Schematic for a thermal overload protection function

3.12.2 Thermal process

Heat transfer takes place in three main components of the transformer; core, windings and oil. The extent of heating of these components is according to their thermal time constants. Considering a component as a homogenous body, the thermal time constant can be defined by the following equation.

$$\tau = \frac{m \times c}{\alpha \times S} \qquad (15)$$

where,

m is the weight of the element being considered [kg]
c is the specific heat [Ws/kg ^{o}C]
α is the coefficient of heat discharge by convection [W/m^2 ^{o}C]

S is the area through which the heat is discharged [m^2]

The denominator of Equation 15 can be replaced by the amount of heat discharged in a second per degree of temperature difference of the heat dissipating surface and its surroundings. Making this substitution, Equation 4 becomes

$$\tau = \frac{m \times c \times \theta}{Q_C} \tag{16}$$

where,

Q_C is the amount of heat discharged per second [W]
θ is the temperature difference of the body and its surroundings [^oC]

Figure 75 presents an exponential curve that represents the heating process that takes place in the transformer. The temperature increases to 63% of the final value after a time equal to the time constant, τ. Because the increase of the temperature is proportional to the square of the current, a current equal to 1.26 times the rated value would cause the temperature to rise to a final value in time T (1.262^2x 0.63 = 1) and the final temperature would be 1.6 times the rated value.

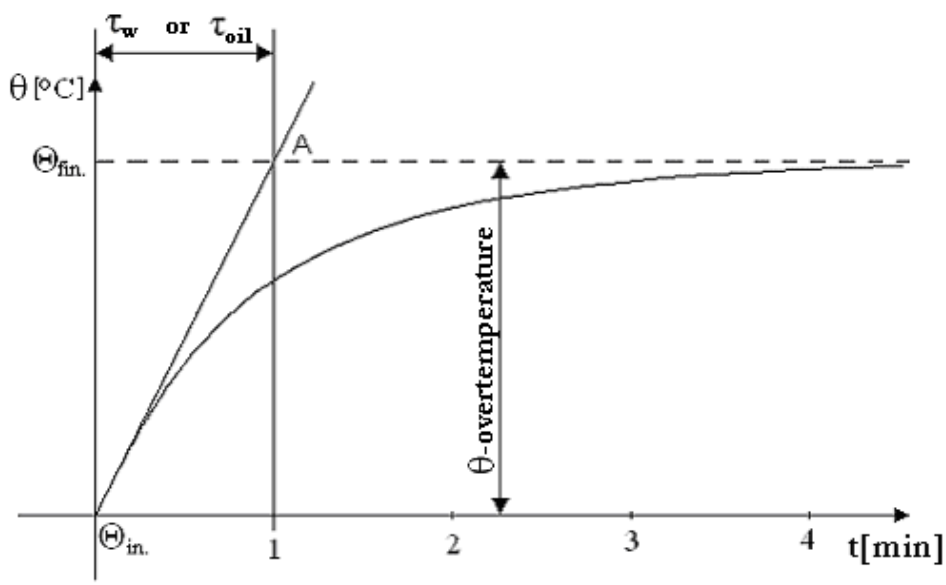

Figure 75 — Temperature rise as a function of time

When the amount of heat generated in the winding/core is equal to the heat carried through the oil to the surface of the tank, the over-temperature is given by the following exponential.

$$\theta_t = \Theta_{in}\left(1 - e^{-\frac{t}{\tau}}\right) \tag{17}$$

where,

θ_t is the over-temperature at time t
Θ_{in} is the initial temperature that is stabilized by the initial load of the transformer
τ is the time constant

The heating process of the different transformer components takes place by the same law of variation, but is different at different moments in time due to their different thermal time

constants. The time constant of oil is of the same order of magnitude as the time constant of the core but the time constant of the winding is much lower. Due to this difference, winding temperature is the weaker element in comparison to the oil and core.

3.12.3 Winding temperature monitoring on transformers with OLTC

On-load tap changers are provided to regulate the voltage delivered downstream on the network. A single winding temperature indicator (WTI) is sufficient for a transformer without tap changer because the calibration circuit allows for the simulation of the hottest winding temperature even if the current is measured on a different winding. However, the situation is different on a transformer with a tap changer because the ratio of primary and secondary currents varies as the tap position changes. In such cases, the WTI cannot be used to monitor the temperature on the primary side if the CT providing the load current measurement is on the secondary winding. Common practice is that the winding hot-spot temperature indicator is fed by a CT on the LV winding. This provides a good control over the temperature of low-voltage winding regardless of the transformer load. For the HV winding the situation is not so clear.

Depending on the tap position of the OLTC transformers, the base currents may be different on the HV winding and LV winding. Usually the rated current is established for both windings at the mid-tap position, and this leads to reduced rated power on some taps. When such transformers operate under overload conditions during system contingencies, the on-load tap changer typically moves from the normal operating position to the end tap to compensate for the voltage drop in the system. Depending on the design of the transformer, the winding hottest spot may move from the high-voltage winding to the low-voltage winding or vice versa. Most transformers are provided with a single winding temperature indicator, which does not allow independent monitoring of the temperature of all windings.

Accurate temperature monitoring on both windings is needed to take full advantage of the loading capabilities of the transformer during emergency conditions. Limitations of the Winding Temperature Indicator (WTI) should be accounted for when transformers are expected to be overloaded.

3.12.4 Protection

Thermal protection of transformers is primarily provided by the winding temperature indicator. Overcurrent protection could provide partial backup protection depending on the relay setting but this practice should not be relied upon. The winding temperature indicator must be considered as the main thermal protection for the transformer windings and monitoring only one winding of the power transformer may not be adequate if the setting of overcurrent protection is raised to allow for overload conditions. Consequently, one option is to add a winding temperature indicator on the second winding so that both windings are protected independently regardless of the tap changer position. This requires the installation of an additional CT on one of the HV bushings to monitor the HV current if not already available,. But, it is generally not practical to add a CT on existing bushings. Therefore this option is applicable only on new units where the additional CT can be provided at a reasonable price.

3.12.5 Thermal protection of transformer windings with modern numerical relays

One application is the use of a digital protection device that calculates independently the temperature on the primary, secondary and tertiary windings using the measured top oil temperature and currents in all the windings as inputs. This is illustrated in Figure 76.

The use of microprocessors for protection has introduced a new overload monitoring concept using thermal models. The principle that is used in numerical relays is to monitor the transformer heating/cooling described by the exponential equation that includes its thermal time constant. The heating curve is monitored in the form of a function $\theta = f(\tau, I)$ because the thermal constant and the load current of each winding are known. The parameters are entered in the memory of the relay, a "thermal image" of the transformer is created and the currents in the windings are measured constantly. The thermal state of the transformer is calculated and the location of the state is known at any moment in time. A modification of the temperature in the thermal image starts from its previous value and is modified when the load current changes.

Modern numerical relays used for protecting transformers include many protection, monitoring and control functions and include the capability of producing special application schemes as a result of their user definable logic.

3.12.6 Overload protection

Some features such as, adaptive protection settings that take into account winter and summer transformer loadings, automatic load shedding and early warning for possible overload tripping is achieved by multifunctional transformer protection. A possible arrangement to achieve automatic load shedding is shown in Figure 77.

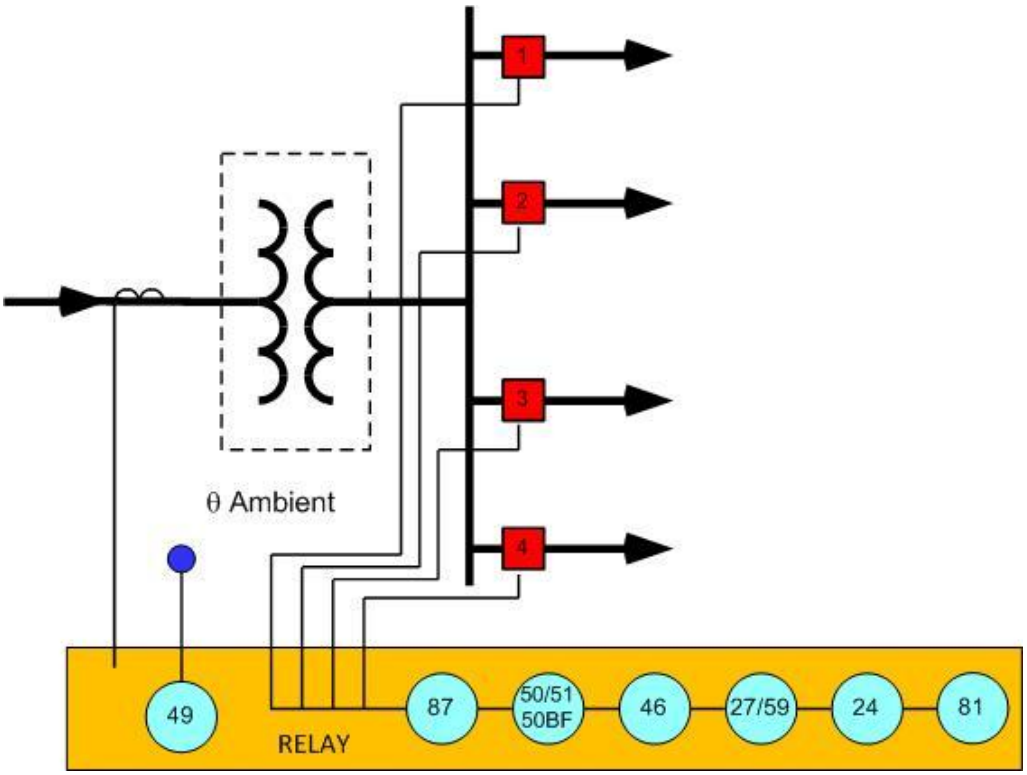

Figure 76 — Thermal protection of power transformers with numerical relays

3.12.7 Temperature monitoring and transformer cooling

The winding temperature is continuously monitored by modern intelligent electronic devices (IEDs) to provide continuous assessment of temperature of each winding. Analog inputs are provided to measure the top oil temperature and current in each winding. The software uses measured values and the known parameters such as, rated current, rated hot-spot temperature rise

for each winding and the thermal time constants for the windings. Simultaneous monitoring of the three windings allows for continuous identification of the insulation hottest-spot temperature even if this hottest spot moves from one winding to another. The calculated hot-spot temperature is used to generate alarms and a trip command.

Modern IEDs include controls for cooling the transformer in addition to monitoring the temperature. The controller provides digital outputs to control the cooling and provides digital inputs to monitor the cooling system. The software detects discrepancies between control and status. Starting and stopping various cooling stages take into consideration the oil temperature, the hottest-spot temperature in the windings and the highest load on the windings.

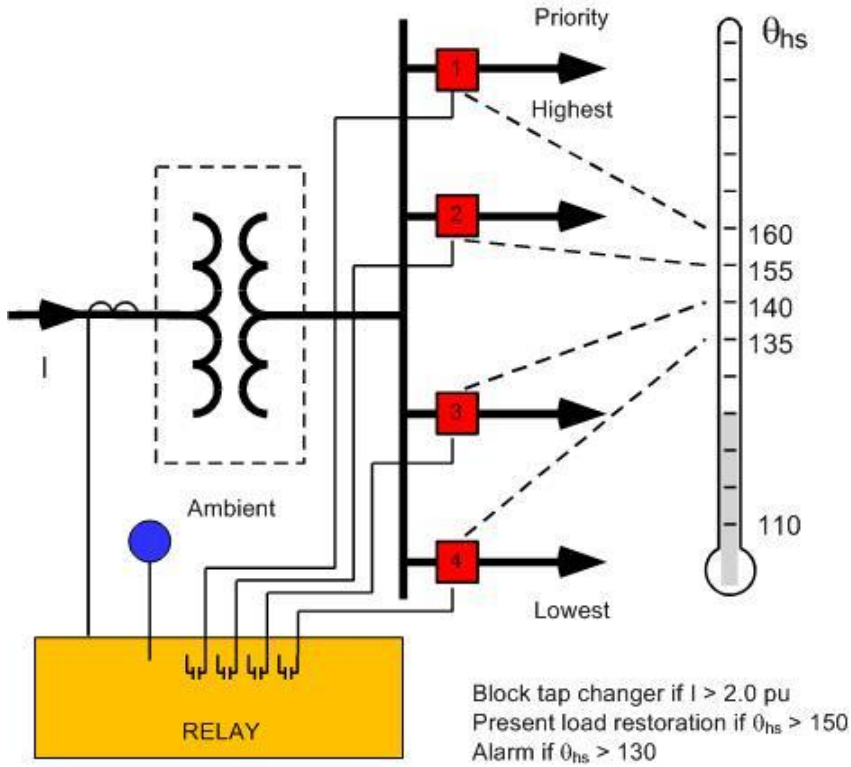

Figure 77 — An example of a thermal overload function for load shedding

3.12.8 Protection versus monitoring

One important characteristic of this application is the need to provide protection functions in addition to the usual monitoring functions. It is required that the thermal protection be qualified to trip the transformer whenever the critical temperature setting is reached on any winding. This is of special interest for the case of unattended substations where the alarm signal would not have been followed by appropriate actions to reduce the load.

3.12.9 Temperature controller characteristics

The temperature algorithm provided in modern relays provides continuous assessment of temperature of each winding. It uses analog inputs of top oil temperature and the current in each winding. The computation uses these measurements and the parameters specific to the transformer, such as rated current, rated hot-spot temperature rise for each winding and thermal time constant for the windings. Simultaneous monitoring of the three windings of a three-winding temperatures allows for continuous identification of the insulation hottest-spot temperature even

if this moves from one winding to another. The calculated hot-spot temperature is used to generate two alarm levels and a third level for tripping the transformer.

3.12.10 Transformer management

Measurable indicators of transformer serviceability include electrical load, top-oil, ambient temperature, hottest-spot temperature; fault history and dissolved gas analysis. Utilities that use these indicators can make intelligent profit / risk decisions and plan optimal transformer loading and maintenance.

3.12.10.1 Measurements

Data collection such as load and fault current as well as top-oil or hottest-spot temperatures, and alarm levels can help predict or anticipate a more complete picture of the transformer's insulation condition.

Modern numerical relays have memory and recording capability, and logical decision making capacity; these can be the beginning of a implementing a comprehensive "life management" system for transformers.

4. Monitoring

The CIGRÉ Transformer Committee A2 has produced two excellent Technical Brochures that provide more detailed discussion and knowledge on monitoring and life management of power transformers. It is highly recommended that the reader review these references. They are:

- Technical Brochure Number 227, SC A2, WG A2.18, "Life Management of Techniques for Power Transformers"
- Technical Brochure Number 245, SC A2, WG A2.20, "Economics of Transformer Management"

4.1 High Temperature Detection

The most important temperature to have knowledge of is the winding hottest spot temperature. This temperature is restricted by design in standards such as the Loading Guides of IEC and IEEE. The manufacturers of transformers must supply as a minimum two temperature indicators, one for the top oil temperature and the other for winding temperature to monitor the hottest winding. Some details of winding temperature indicators are given in Section 3.12.

4.1.1 Sensors for Measurement of Temperature

Direct measurement sensors are placed in the windings at locations where the highest temperature is expected to occur. The sensors are connected to the measurement device that is mounted outside the tank through a hole in the tank wall with liquid-tight optical connectors. Accurate placement of sensors depends on the ability to predict sites where the hottest spot is likely to occur. Experience has indicated that it is not an exact science. An excellent discussion of sensor placement is provided in section 4 of the IEEE P1538 Guide for Determination of Maximum Winding Temperature Rise in Liquid Filled Transformers.

Sensors for direct measurement are of two general types optical probes and resistive thermal detectors (RTDs).

4.1.1.1 Optical Probes

Optical probes are widely used for temperature measurement. They have fast response times and are very accurate. Most optical probes that have been used inside transformers can be divided into two types, intrinsic fiber optic sensors and extrinsic fiber optic sensors. In both types, the fiber optic probe is constructed of appropriate materials that allow the probe to be installed directly inside the transformer tank and into the transformer windings. Generally, this is best done during initial construction of the transformer or during major winding renovations.

4.1.1.2 RTD Probes

Commonly used RTD probes are located in dry wells at different locations in the transformer tank, have been effectively used for decades to have a reasonable measurement of the oil temperature in the area of the dry well.

4.1.1.3 Magnetically Held Temperature Sensors

Many transformers are not equipped with options for monitoring the oil temperature. One of the more common non-intrusive techniques is to apply magnetically held temperature sensors to the wall of the transformer tank. These sensors usually have a RTD element in contact with the metal surface and can also have internal circuitry to convert the RTD measurement to a 4 mA to 20 mA output.

4.1.2 Temperatures Important to Monitor

The temperatures that are important for monitoring the health of a transformer are top-oil, bottom-oil, on-load tap changer and ambient temperatures. Issues concerning these measurements are briefly described in this section.

4.1.2.1 Top Oil Temperature

The oil at the top of the tank is "mixed" as a result of the hot oil exiting the winding ducts mixing with the bulk oil in the balance of the tank. This measurement is vital for calculating the winding hot-spot temperature by means of electronic devices.

4.1.2.2 Bottom Oil Temperature

The measurement of bottom oil temperature is increasingly seen as important. The ongoing revisions to the IEEE Load Guide (C57.91), has revised the reference temperature for calculating the winding hottest spot temperature from the top-oil temperature measurement to the bottom-oil temperature measurement.

Recent models calculate the moisture content in the thin barriers between HV and LV windings of transformers using the bottom-oil temperature measurement.

4.1.2.3 OLTC Tank Compartment Temperature

The temperature of oil inside the OLTC compartment(s) is an important parameter to measure. Many monitoring systems use models that take into account time, top oil temperature and OLTC oil temperature to detect when the OLTC compartment is revealing a higher temperature than the main tank.

This diagnostic approach helps to detect coked and/or misaligned contacts within the OLTC compartment. This technique provides best results when the OLTC oil compartment is an external compartment rather than an internal OLTC in which case the temperatures of oil in the tank and OLTC are nearly the same.

4.1.2.4 Ambient Temperature

The measurement and recording of the ambient temperature of the air near the transformer is an important measurement for estimating the overloading capability of the transformer. Some transformer monitoring systems take into account the current loading of a transformer and ambient temperature and extrapolate into the future the amount of overload a unit can withstand safely.

4.2 Oil Level / Flow Monitoring

Levels of oil in transformers and OLTCs should be monitored to ensure that their operation is not jeopardized. Devices used for this purpose are described in this section.

4.2.1 Magnetic oil level gauge

Many transformers are provided with an expansion vessel, called conservator, to take care of expansion in the oil volume due to rise in temperature when the load on the transformer increases or the ambient temperature increases. It is essential to maintain the oil level in the conservator above a pre-determined minimum level. All transformers with conservator tanks are, therefore, fitted with magnetic oil level gauges that also incorporate mercury switches; these switches close and actuate audible alarms in the control room in the event of oil level dropping to near empty position in the conservator. Normally prismatic/toughened glass type gauges are used for oil level indication.

4.2.1.1 Bushing oil level indicator

Prismatic/toughened glass type gauges are also used for oil level indication in transformer bushings.

4.2.2 Flow indicators

Flow indicators are provided in oil forced air forced (OFAF) transformers. These indicators are safety devices that provide an electrical signal on failure of forced circulation of oil in the cooling circuits. These flow indicators show specified rate of full flow in specified direction in known size of pipe and operate one or two micro-switches when rate of flow drops to approximately 70% of the specified full flow rate. These switches can be used to initiate precautionary system or safety devices.

4.3 Fire Protection

Fire extinguishing systems are provided on many major transformers for preventing serious damages if a fire takes place in or around the transformer. The fire extinguishing equipment use either pulverized water or nitrogen.

4.3.1 Advantages and disadvantages of pulverized water systems

The fire extinguishing systems utilizing pulverized water have the following advantages and disadvantages.

4.3.1.1 Advantages

— water spray covers all parts of the power transformer

— no foreign material is injected into the transformer

4.3.1.2 Disadvantages

— require large facility for storing water

— require an auxiliary building

— require high pressure compressors

— require large space around the transformer

— have nozzles that may get clogged

— oil that may accidentally come into contact with water; the oil would have to be replaced

4.3.2 Advantages and disadvantages of the nitrogen systems

The nitrogen system has the following advantages and disadvantages.

4.3.2.1 Advantages

— Simpler to construction

— require little space

— can be quickly easily installed, commissioned and utilized

4.3.2.2 Disadvantages:

— introduction of nitrogen into the transformer tank and evacuating oil are unnecessary operations if the fire prevention system operates unnecessarily

— special oil draining system is required

— does not cover fire in the bushings

4.4 Pressure Relief Valve

The pressure in a transformer tank can rise due to a fault inside the tank. One or more devices are provided on the transformer tank to relieve the pressure in the tank. The pressure reliving equipment is spring-operated, self resealing device that releases volume of oil that is just sufficient to relieve the excess pressure before resealing the tank.

The major disadvantage of the spring loaded diaphragm is that, once it had burst, it allows indefinite amount of oil to be released; this is likely to aggravate any fire associated with the fault. Hence, PRD is finding widespread preference over the explosion vent or bursting diaphragm type equipment due to its superior features.

4.5 Integrity of Insulating Oil

The oil used in transformers performs three essential functions; these are thermal transfer of heat, dielectric insulation and transport information about the health of the transformer. A transformer may be considered as a chemical reactor to understand the process of physics and chemistry for assessing the health of the transformer

The oil is the messenger that holds vital information on the physical condition of the transformer. Normal practice consists of obtaining oil samples from the transformer and OLTC compartment, if it is used, for testing. Standard tests on the oil samples include determining the absolute water contact in oil, particle count in the oil, IFT, colour, and most importantly perform dissolved gas analysis.

After completing the tests, the results are compared with the results from the previous tests of the same unit to determine if any change has taken place, and more importantly, at what rate the change is taking place. The rate of change and standard diagnostics techniques provided in IEC and IEEE Guides for interpretation of the results can be used to determine the actions that should be taken.

4.5.1 Signature Analysis

This topic of signature analysis or interpretation of results from oil tests is addressed in many papers, as well as in the IEC and IEEE Guides, such as the following.

(a) IEC 60599, Mineral Oil Impregnated Electrical Equipment in Service- Guide to the Interpretation of dissolved and free gases analysis.

(b) IEC 60422, Mineral insulating oils in electrical equipment - Supervision and maintenance guidance

(c) IEEE C57.104, Guide for the Interpretation of gases dissolved in oil

(d) IEEE C57.106, Guide for Acceptance and Maintenance of Insulating Oil.

4.5.2 Dissolved Gas Analysis

Many gradually evolving incipient faults in transformers have detectable symptoms that indicate problems. One of these symptoms is the production of dissolved gases in oil.

4.5.2.1 Dissolved Gases in Oil

Dielectric oil and cellulose dielectric insulation (paper) break down under thermal and electrical stresses in the transformer. This process produces gases of varying concentrations depending on the stresses applied to these materials. The gases dissolve in the oil. The oil is sampled and analyzed; the composition of the gases and their concentrations that are indicative of the nature and severity of the fault in the transformer are determined. The changes in the production of each gas and its rate of production are important factors in determining the fault(s) and their evolution. Some specific gases are recognized as being indicative of certain types of faults.

4.5.2.2 Degradation of Oil-Impregnated Cellulose

The thermal degradation of oil-impregnated cellulose produces carbon monoxide and carbon dioxide. Hot spots in the windings, on insulated leads, and in areas where pressboard and cellulose components and spacers are used produce these gases.

4.5.2.3 Degradation of Dielectric Oil

The degradation of oil through abnormal dissipation of energy in the transformer can be detected by analyzing the produced gases. The energy released through a fault such as overheating, partial discharge, corona and arcing results in production of gases as the oil degrades. The detection of these gases allows for not only the identification of the fault process, but also for its monitoring.

These degradation by-products, known as fault gases, include hydrogen, hydrocarbon gases, methane, ethane, ethylene and acetylene. It is important to note that each of these gases has a characteristic energy required for its formation. As a result, each individual gas can be related to a specific fault process.

4.5.3 Early Detection on Oil-Filled Transformers

Regularly scheduled and periodic use of Dissolved Gas Analysis (DGA) on a population of transformers usually reveals that 90 % of the sampled units are behaving in a satisfactory manner. The balance of the units may be considered as suspects and, therefore, should be closely watched. The behaviour of a transformer is satisfactory when the transformer has not deviated from its previously established baseline, equilibrium point or fingerprint. A normal and constant gas level for one transformer may be very high for another. Each transformer has its own unique normal dissolved gas pattern. It is the change in gas levels and, equally important, the rate of change of the gas levels that cause a problem unit to stand out from the others.

4.5.4 Dissolved Gas Analysis

A DGA represents only a five-minute data window or snapshot in time about the condition of a transformer. It cannot and does not guarantee that a good report means status quo until the next DGA is performed.

There are markedly long periods of time during which fault gases of the transformer are not monitored if a DGA is applied on a six or twelve-month schedule. A serious problem could easily start and go undetected for days, weeks, or even months and fully evolve into a catastrophic failure with no warning. All of this could occur after a good DGA, and before the next scheduled DGA.

In order for a DGA program to be truly effective, one of the following two changes should be made:

Either DGA needs to be performed on a much more regular basis, approaching the unrealistic schedule of once per day or

A cost-effective and reliable real-time gas-trending trigger or early warning signal should be used to effectively bridge the time gap between regularly scheduled DGAs.

4.5.5 Incipient Failure Condition Detection

The number of different technologies that can be used in various ways to detect on-line symptoms of transformer failures has steadily increased during the previous twenty-five years. Since the root cause of failure of a transformer is the breakdown of the insulating system (oil and paper), the techniques detect both KEY fault gases (hydrogen and carbon monoxide) to provide early warning, alarming and trending.

These technologies have developed to the point that thousands of on-line dissolved gas monitors are installed on critical transformers. Many published papers describe cases in which these monitors successfully detected failure conditions before other protection systems operated. Unfortunately, on-line dissolved gas-in-oil monitors do not detect all failure modes. Some failure modes are very fast and no amount of on-line monitoring can detect these fast evolving faults.

The CIGRE and IEEE transformer committees have developed guidelines for application of different techniques of on-line monitoring. CIGRE reports are listed in the general comments at the beginning of this chapter.

The IEEE Transformers Committee is currently in the process of developing PC57.143 (draft 14 at this time) “IEEE Guide for the Application of Monitoring to Liquid Immersed Transformers and Components”.

These documents provide the user with a wealth of detailed information on all aspects of on-line monitoring of the transformer and its components.

4.5.6 Key Gases and Dissolved Gas Indices

A detailed discussion of DGA is given in the IEEE Std C57.104-1991, IEEE Guide for the Interpretation of Gases Generated in Oil-Immersed Transformers. The key gasses usually looked for are Hydrogen, Acetylene, Methane, Ethylene, Ethane, Carbon monoxide, and Carbon dioxide. The breakdown of the key gasses and the associated fault types are listed below:

Key Gas	Associated Fault Type
Hydrogen (H_2)	Arcing, Corona, Overheated oil
Acetylene (C_2H_2)	Arcing
Methane (CH_4)	Corona, Overheated oil, Cellulose breakdown
Ethylene (C_2H_4)	Arcing, Corona, Overheated oil, Cellulose breakdown
Ethane (C_2H_6)	Corona, Overheated oil
Carbon monoxide (CO)	Cellulose breakdown
Carbon dioxide (CO_2)	Cellulose breakdown

The gasses listed above are typically grouped together, except for CO_2, and are identified as Total Dissolved Combustible Gas (TDCG). IEEE Std C57.104-1991 provides recommendations for determining what course of action should be taken depending on the level of the key gases and the TDCG. The courses of action are designated as "conditions" and are divided into four categories with associated recommendations.

Condition 1	TDCG levels are normal indicate the transformer is operating properly. Any individual combustible gas exceeding specified levels should prompt additional investigation.
Condition 2	TDCG levels within this range indicate greater than normal combustible gas level. Exercise caution, analyze monthly.
Condition 3	TDCG levels within this range indicate a high level of decomposition. Exercise caution, analyze weekly, consider planned outage, notify manufacturer.
Condition 4	TDCG levels within this range indicate excessive decomposition. Continued operation could result in transformer failure. Analyze daily, consider removal from service, notify manufacturer.

Another approach to determine the types of faults is to calculate the ratios of the key gasses found dissolved in the transformer oil. Depending on the level of each key gas and the ratio of specific combinations of gasses, the type of fault can be determined. The ratios are designated as Doernenburg and Rogers ratios. Refer to IEEE Std C57.104-1991 for further information.

4.6 Partial discharge measurements on transformer taps

Partial discharge (PD) measuring technique represents an efficient method to assess the faults of power transformer insulation. This technique was previously used in fully screened laboratories

but it is now being used on site as well. This is possible due to the use of digital techniques in PD signal acquisition process and processing the acquired information with special software filtering the useful components from external disturbances.

PD measurement requires taking the transformer out of service for a short period of time that leads to a disturbance of the power system it is part of. That is why operative monitoring of the operational state of its insulating parts was made by the analysis of oil dissolved gasses content as well as by PD measurement using acoustic method. If the results of the two measurements show that there is a fault PD electric measurements are performed to determine its nature and location.

4.6.1 Acoustic method for PD detection

To detect acoustic emission transducers with piezoelectric sensors that have maximum sensitivity for frequencies of 25, 65 and 125 kHz are usually used.

4.6.2 Monitoring Transformer Bushings

The analysis of failures of large transformer units in operation has led to the conclusion that majority of events are caused by the failure of auxiliary parts in general and by the failure of bushings in particular. There were instances when the deterioration of bushings resulted in the transformer unit being taken out of service and/or a fire leading to important economic losses. An important countermeasure in this respect is to monitor the bushings. Traditionally, the bushings have been monitored off-line and on-line.

Most systems that are available at this time are based on the principle of measuring on- line the variation of power factor of the bushing capacitive current or tan (δ) defined as follows.

$\tan(\delta)$ (≈1÷power factor)

Measuring the bushing capacitive current variation with time has yielded good results for more than 20 years and has pointed out the evolving faults consisting of the deterioration of parts of the insulation

On-line monitoring by tan (δ) measurement is relatively new at the international level and has just begun to be utilized on power transformer units and reactors. In order to expand its application it is necessary to test its measuring sensitivity and accuracy by means of off-line comparative measurements.

Both methods have the alarm and switch-off functions of the transformer units in case of failures that lead to deterioration of the bushings.

4.6.3 Monitoring On-Load Tap Changers

An important component of a power transformer and also a frequent reason for severe failures is the on-load tap changer because it is the only moving part in a transformer. Therefore, the monitoring of this highly stressed element is necessary.

Methods of OLTC monitoring are as follows:

- Monitoring current of the OLTC motor during tap changing
- Monitoring the acoustic emission or vibrations of the OLTC during tap changing
- Monitoring torque of the OLTC motor drive during tap changing

5. Control

Voltage and tap changer controls and integrated protection and control of transformers are described in this section.

5.1 Voltage and tap changer controls

Most network power transformers and large voltage regulators are equipped with manual or automatic on-load tap-changers so that the voltage ratio and hence the secondary voltage may be varied as the load supplied by the transformer changes. Manual control may be used for transformers whose tap positions are changed only infrequently, such as transformers at generating stations. Manual control may be local, at the substation or remote, at a central control centre. Automatic control is provided on transformers in the high-voltage networks. The objectives usually include some or all of the following.

- Control the voltage at the local substation bus or at some remote load bus
- Control the power factor and VAr flow in the network transformer
- Share load among transformer connected in parallel so as to keep them "in step" to minimise circulating currents

A popular misconception is that unequal MW load sharing between parallel transformers due to the differences in their impedances can be corrected using tap-changer control. However, this is not consistent with minimizing the circulating current and may not reduce the total current in the over-loaded transformer.

5.1.1 Manual control

There is usually a provision at the tap-changer drive mechanism box for manually changing transformer taps for operation, testing and maintenance. This arrangement consists of a mechanical handle with a safety interlock to prevent electrical operation while the handle is in position, or by local pushbuttons when the local-remote switch is in the "Local" position.

The local-remote switch is normally kept at "Remote" to allow manual control from the control cubicle or automatic control from the system control centre. Automatic and remote control schemes may require an "enable" input from an auxiliary contact on this switch. These schemes usually provide visual feedback to the operator. This may include indication of tap position, transformer secondary voltage and "tap-change in progress". Visual and audible alarms are usually provided to indicate abnormal conditions such as, failure of the auxiliary power supply to the control circuits, failure of the tap-changer to complete a tap-change, tripping of the drive-motor, under- or over-voltage on the transformer secondary and excessive circulating current if transformers are operating in parallel.

5.1.1.1 Interlocking and operation blocking

The tap change drive mechanisms include electrical limit switches and mechanical end stops to prevent attempts to drive it beyond its extreme positions. There may be a "step by step" control interlock to prevent continuous tap changing if the pushbutton is held down or the automatic voltage control relay contact stays closed or there is a short-circuit in the control circuit. Over-voltage blocking is often provided to prevent manually raising the voltage beyond a pre-set limit. Over-current blocking may be provided to prevent initiation of a tap change in either direction if

the load current exceeds the tap-changer's rated switching current during emergency loading conditions. These interlocks and blocks apply also during automatic tap changing operations.

5.1.2 Automatic voltage control using electromechanical and solid-state technology

The load-side (secondary) voltage of a transformer is subject to cyclic and random fluctuations due to variation of system loads and operating conditions. The objective of automatic voltage control (AVC), also called automatic voltage regulator (AVR), is to control the operation of the on-load tap-changer (OLTC) so as to maintain the secondary voltage close to a set value. The OLTC changes the voltage by a "step voltage" that is determined by the transformer design. The AVC scheme includes tolerances greater than the step voltage to prevent hunting, and also includes timers to prevent excessive operations. The AVC relays determine if the secondary voltage needs to be increased or decreased, and sends a signal to the OLTC control to change taps in the appropriate direction.

5.1.2.1 Voltage settings

There are two main settings as shown in Figure 78; these are the voltage setting, V_{SP}, target or band centre voltage V_{SP} and the voltage tolerance V_{TOL} or voltage bandwidth $V_B = 2 \times V_{TOL}$. The voltage band remains centred about the voltage setting if it is changed.

A timer starts when the voltage strays outside the tolerance band. There is usually a built-in hysteresis V_H and the timer does not drop out unless the voltage strays back inside the inner band $V_{SP} + (V_{TOL} - V_H)$. If the voltage stays outside this inner band until the timer times out a raise or lower signal is sent to the OLTC to reduce the absolute voltage deviation $|V - V_{SP}|$. If the voltage is still outside the outer band, the timer starts again and the whole process is repeated. Another mode of operation, called sequential mode, changes taps continuously without any time delay (except for the initial tap change) until the voltage returns to inside the selected band.

The voltage changes by the step voltage V_{STEP}. To avoid the possibility of hunting, the tolerance band must be wide enough so that it is not possible for a single tap step to change the voltage from just outside the inner band on one side to just outside the outer band on the other side because this would then immediately initiate a tap change in the reverse direction.

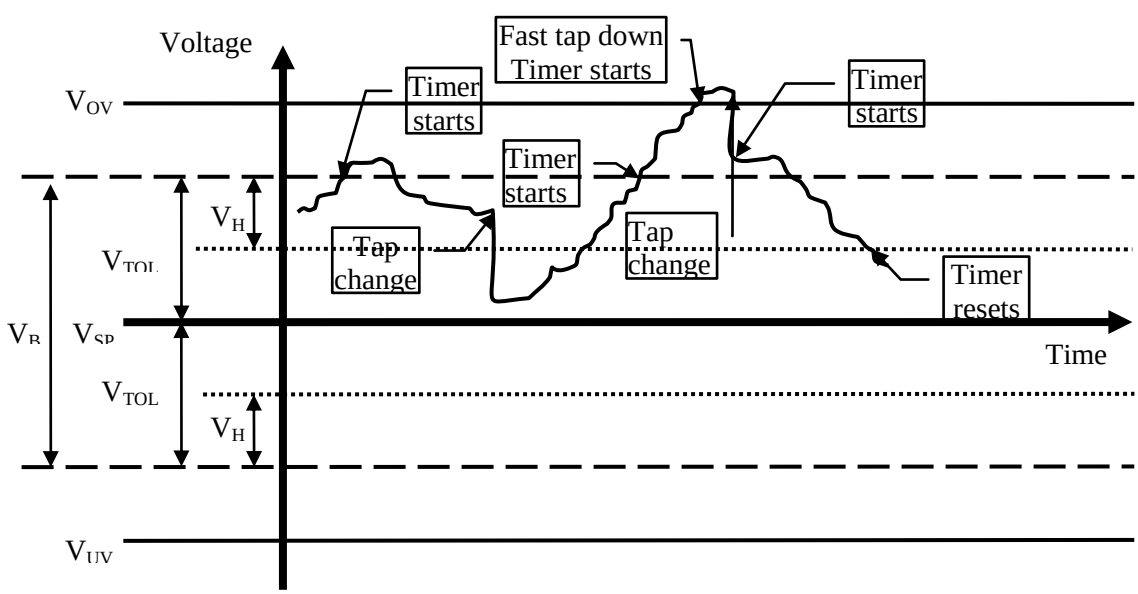

Figure 78 — Automatic Voltage Control

The condition for stability is, therefore $V_{TOL} + (V_{TOL} - V_H) > V_{STEP}$. Assuming that V_H is about one half of V_{TOL}, the condition for stability is $1.5\ V_{TOL} > V_{STEP}$.

On the other hand too large a value of V_{TOL} could result in excessively large voltage deviations. In practice V_{TOL} is often set equal to V_{STEP}. Other AVC voltage settings include the following.

- Voltage reduction control is provided to enable the set voltage, V_{SP}, to be decreased in emergencies to reduce the load on the system. The tolerance bands remain centred around the new value of $V_{SP.}$ Typically 2 or 3 pre-set stages are provided. Either stage may then be activated from the control centre when required. Once the voltage setting is reduced, AVC continues to keep the reduced setting until load reduction is turned off.
- Under-voltage blocking is provided (V_{UV} setting) to prevent the AVC running the OLTC to maximum voltage position during a temporary system disturbance or outage. When power is restored to a substation AVC becomes operational and starts with the OLTC in the position it was in before the outage. This avoids an over-voltage at the restoration of power to the substation. It also prevents sustained over-voltage conditions that could otherwise be caused by a blown VT fuse or other failures of the VT supply. Usually the V_{UV} setting is absolute and does not change if V_{SP} changes.

The over-voltage setting V_{OV} and over-current blocking discussed under manual tap changer control also apply under AVC. These settings do not change if V_{SP} changes.

5.1.2.2 Time delays

Usually a time delay is provided so that the voltage has to be out of tolerance for this time before tap changing is initiated. This prevents the OLTC from changing the taps if voltage fluctuates for short-durations of time and, thus, prevents excessive wear and tear of the OLTC. This delay is usually a definite time delay that is typically pre-set in the range from 30 to 120 seconds. Too short a delay would result in excessive tap change operations and wear on the tap-changer and too long a delay would result in keeping the voltage outside statutory limits. Coordination with other AVC relays in the system should also be considered. Voltage corrections should be made at a faster rate at upstream-substations to avoid unnecessary excessive tap-changing in downstream-transformers.

Many AVC relays have two additional timers; the first timer ensures that, if the voltage is still out of the tolerance band after changing a tap, the subsequent changes take place with a reduced time delay that is typically 10 seconds. The second timer ensures that, if the voltage is considerably more than a pre-set value (outside the tolerance band), a “fast tap down” is implemented to bring the voltage back in the tolerance band in less time than the normal time delay.

Some AVC relays have an inverse time delay mode that may be used instead of the definite time delay mode described above. Larger voltage deviations are reduced faster than small deviations. A fairly long time delay can be set for voltage fluctuations just outside tolerance to reduce tap-changer wear. If the voltage strays further out of tolerance the remaining time delay can be decreased.

5.1.2.3 Line drop compensation

Line drop compensation (LDC) is used to compensate for the voltage drop in a line, or in a cable, due to the flow of current so as to control the voltage at a remote location in the system. The AVC relay is fed a “control voltage” proportional to the vector difference between the voltage at the local bus and the voltage drop in the line.

A current proportional to line current is passed through a reactor, X, and a resistor, R, connected in series in conventional LDC systems to determine the voltage drop in a line. X and R are adjusted to values proportional to the line reactance and resistance. This is known as true X and R line drop compensation and gives correct compensation regardless of power factor of the current. It is possible to use single impedance, Z, setting for LDC if it is known that power factor does not change substantially. The control voltage, in these cases, is calculated as the arithmetic difference between measured voltage and IZ drop.

When a number of transformers operate in parallel to supply a load, the LDC compounding voltage should not change if one of the transformers is switched off. This is because taking a transformer out of service would not cause the voltage drop in the line to change. This is typically achieved in one of two ways. For transformers with circulating current parallel control a special circuit is used to determine the current flowing through X and R according to how many transformers are connected in parallel as described in Section 5.1.4.2.3. The summated current of all the transformers feeding the load is used for LDC in most other parallel control schemes. This is illustrated in the Figure 79. In both cases three interconnecting wires carrying CT secondary currents are required between the transformers operating in parallel for the purpose of LDC. (Additional interconnecting wires are required for parallel control in most schemes.)

Note: the above applies when total load current supplied by the parallel transformers is subject to LDC. In many substations power factor control capacitors are connected to the bus via a switch. Their current must not be included in the LDC current. In such cases, use CTs of the same ratio in the capacitor circuit and subtract their output from the summated transformer current. Alternately the LDC current may be derived by summating the line currents subject to LDC rather than the transformer currents.

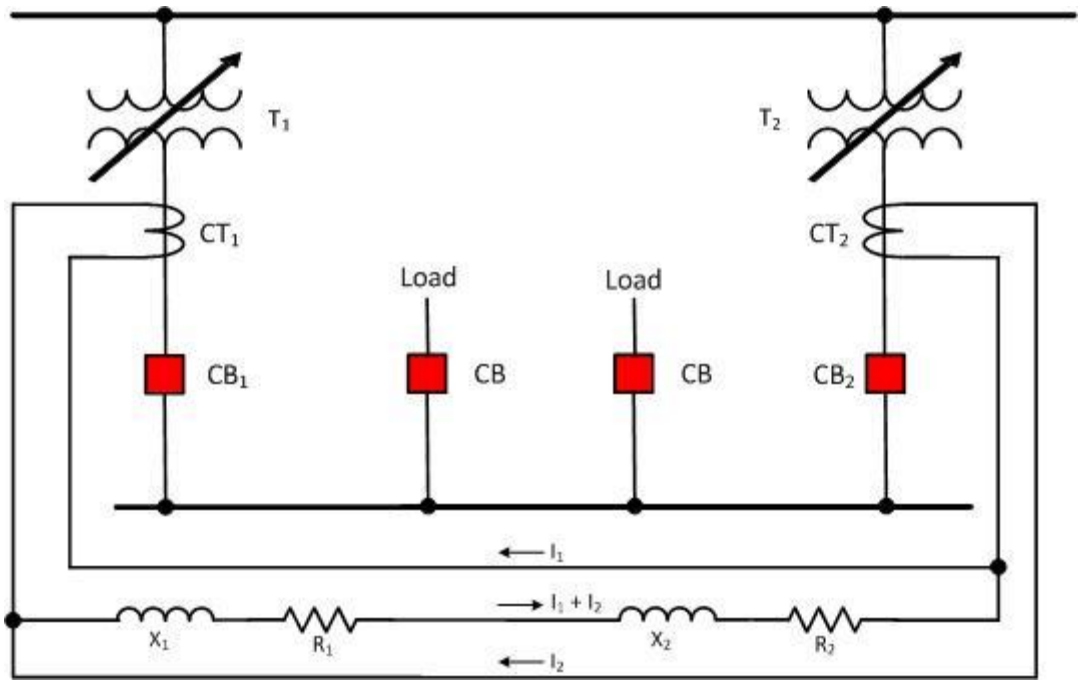

Figure 79 — Load Drop Compensation CT Connections

Many modern digital AVC relays incorporate the LDC functions so that they do not require external reactors or resistors for this purpose. Instead they have X and R settings in software to represent line reactance and resistance. In parallel control schemes using serial communications between AVC relays, each can measure its own load current and exchange the information so that the summated load current can be determined and used for LDC.

5.1.2.4 CT and VT Polarity and Phasing

Many AVC schemes use load current for LDC or automatic parallel control. In all such cases, the relative polarity and phasing of the CT and VT must be known and should be taken into consideration. Ideally, the phasing should be such that for unity power factor loads flowing from the transformer secondary terminals towards the load, the CT secondary current should be in phase with the VT secondary voltage. This is typically achieved with a VT connected phase-to-neutral and a CT in the same phase as shown in Figure 80 (a). The same result can be achieved by using the difference current between two CTs of the same ratio in the two phases to which the VT is connected if the VT is connected phase-to-phase as shown in Figure 80 (b). Another method often used is to have a VT connected between phases and a CT in the third phase as shown in Figure 80 (c). This produces a 90° shift between CT and VT outputs. This can be accommodated by interchanging the roles and values of the R and X settings. The CT and VT can be connected to any phase and the unity-power factor phase shift between CT current and VT voltage can be programmed in many modern digital AVC relays. In most AVC systems, a single phase voltage and a single phase current are sufficient for control purposes because either they are for single phase regulators or for three-phase AVC systems with balanced voltages and currents.

Three-phase AVC relays are also available; these relays control the median voltage and provide three-phase over-voltage and over-current alarms.

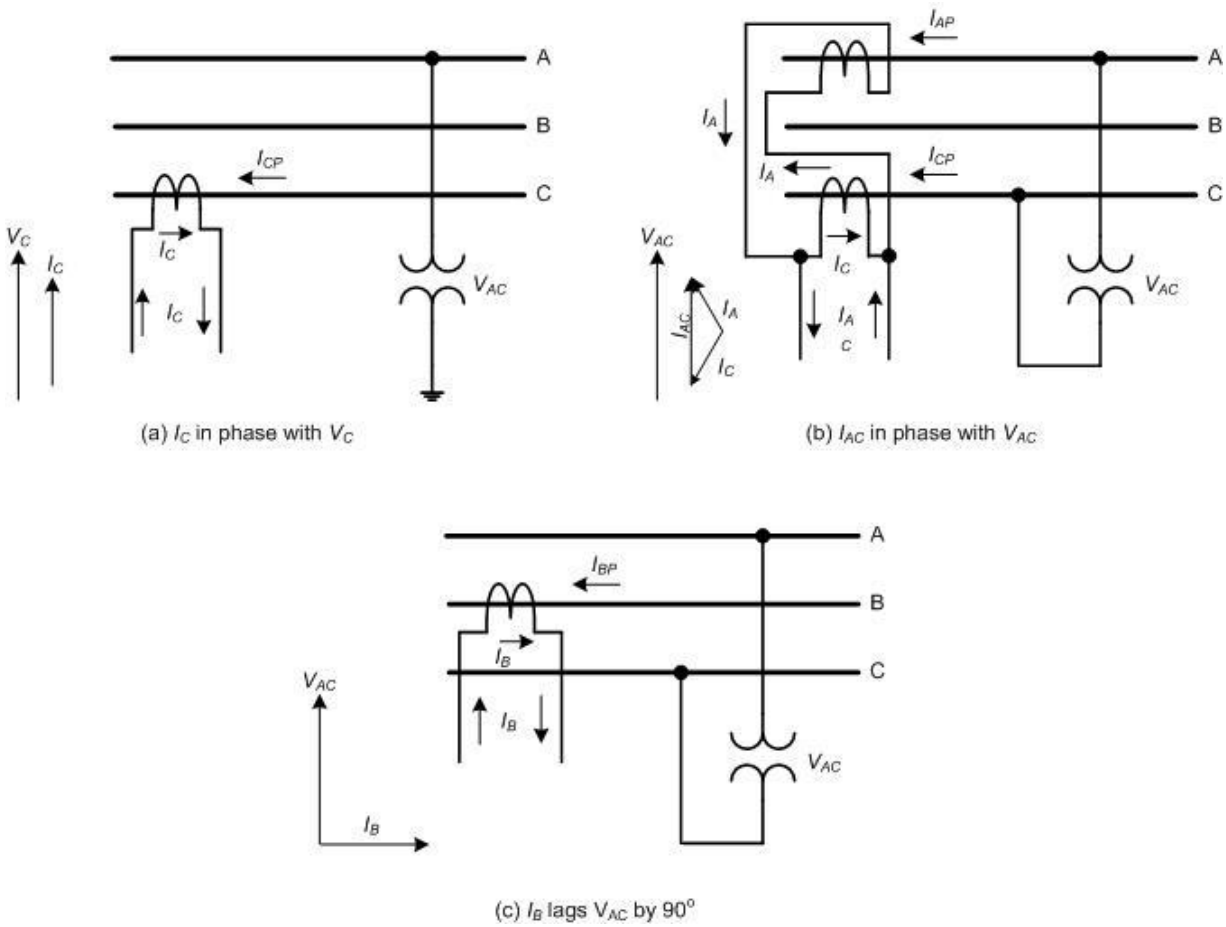

Figure 80 — CT and VT Polarity and Phasing

5.1.2.5 Direction of power flow

The power flow in many transformers is always from the primary windings (supply side) to secondary windings (load side) but in network transformers, it is usually bi-directional; it is necessary to take some precautions when the power flow can be in either of the two directions.

Some low-cost OLTCs, manufactured in the past, used an "asymmetrical pennant cycle"; the OLTCs had selector switches (not separate tap selectors and diverter switches) and the through-current connection was at one end of the transition impedance instead of from centre of the transition impedance. Such OLTCs are mainly intended for use when load flow in one direction only. They have reduced rating for power flow in the reverse direction and, therefore, the over-current blocking setting should be less in the reverse direction. The tap-changer manufacturer should be consulted if such an OLTC is used on a transformer in which bi-directional power flow can occur.

The AVC relay should always control the transformer secondary voltage except for embedded generator transformers discussed further below. If the direction of power flow changes, AVC should be disabled, or it should be able to detect the new direction of power flow and automatically transfer its control function to what is now the secondary voltage. For example, if a step-down transformer becomes a step-up transformer, the LV winding which was the secondary winding becomes the primary and the HV winding becomes the secondary winding. If increasing tap position number previously increased LV voltage, it will now decrease HV voltage, and vice versa.

5.1.2.6 Combined Control of Voltage and Load Power Factor

Control of reactive power or load power factor is not strictly a topic of "Transformer Control", but is briefly addressed because it is related to it. Three scenarios are discussed in this section.

Many sub-transmission and distribution substations have power factor correction capacitors that are switched in or out for maintaining voltage at the substation. The control of these capacitors is usually separate from the voltage control of the transformer. The problem with this approach is that every time a capacitor bank is switched in or out it causes a fairly large increase or decrease in bus voltage. The AVC relay responds in its standard way with its normal time delay. If the voltage control and power factor control were integrated the AVC response time could be very much reduced for switching a capacitor bank. In fact, before a capacitor bank is switched on, the AVC relay could reduce the voltage by an appropriate amount thereby totally eliminating any over-voltage condition that would otherwise occur. There are some integrated AVC and power factor relays in service at this time.

Another example concerns with embedded generator transformers. A relatively small generator is usually connected to a strong system through a generator step-up transformer in many cases. The transformer primary is the LV winding and the transformer secondary is the HV winding. Because the generator is small compared to the system, changing the generator excitation mainly affects the reactive load (VARs) it delivers and has negligible effect on the voltage. An AVC relay may be used to maintain the transformer primary (LV) voltage constant at a level that is suitable for the generator in such cases. The generator excitation system basically controls the VAR flow.

A generator connected to a power system bus in many cases is large enough to affect the voltage that bus. The generator AVC usually controls the generator excitation to maintain at a constant level the transformer secondary (HV) voltage. The transformer AVC system usually controls the OLTC to maintain the transformer primary (LV) voltage constant in these cases. This arrangement works well because the generator AVC is a fast-acting device that has a response

time of the order of tens of milliseconds and the transformer AVC response time is typically more than 1000 times the response time of the generator AVC.

The third example relates to interconnected power supply networks. An AVC can be used in a purely radial system to control the voltage at a downstream location but in an interconnected network, there are many parallel paths. The effect of tap changing on VAR flow should be considered in these cases. It is a usual practice to control all the affected OLTCs from a central location, usually the System Control Centre, where information of all bus voltages and VAR flows can be used in an integrated AVC and VAR flow control system.

5.1.3 Parallel Control

Parallel operation of transformers for the purpose of this section is defined as follows.

> Two or more transformers connected in such a manner that they share the load supplied from a common bus. Any system operation that removes the supply source from a paralleled transformer(s) or separates a transformer winding carrying load from a common load bus ends the parallel operation of the transformer(s). The shared load may include generation, capacitors or any type of load.

5.1.3.1 Requirements for Parallel Operation of Transformers

Three conditions should be satisfied for transformers to operate satisfactorily in parallel. The first condition is that all the transformers operating in parallel should have the same phase shift between the voltages of the HV and LV windings and the winding connections preferably should belong to the same vector group, for example all transformers should be connected Dyn1, or Yyn0, etc.

It is desirable that the transformers operating in parallel should share the active load current approximately in proportion to their MVA ratings. This requires that the second condition should be satisfied for proper parallel operation of transformers. This condition is that the per unit impedances of all transformers based on their own MVA ratings should be equal. If all the transformers operating in parallel have exactly the same ratio and phase, their impedance voltage drops would be the same; the voltage drops can be expressed as in the following equation.

$$\Delta V_Z = \left(I_P R - I_Q X\right) + j\left(I_Q R + I_P X\right) \tag{18}$$

where,

I_P	is the active component of the transformer current
I_Q	is the reactive component of the transformer current
X	is the leakage reactance of the transformer
R	is the ac resistance of the transformer

If the percentage impedances of transformers connected in parallel are not the same, the transformer whose percentage impedance is higher should be derated to account for loading variations. The transformers would share both the active and reactive components of the load current in proportion to their MVA ratings of their percentage impedances are equal.

The transformer impedances may change considerably with tap position. Depending on the transformer winding arrangement and connections the impedance may decrease, increase or remain substantially constant with increasing tap ratio. Therefore, transformers to be connected in parallel should not only have approximately the same impedance on principal or centre tap, but the variation of impedance over the range of the taps should be approximately the same and in the same direction. It is generally not practical to match the impedances exactly due to transformer

design differences and manufacturing tolerances. The IEC Power Transformer Standard allows a tolerance on power transformer guaranteed impedance of + 7.5% of the declared value on principal tap and + 10% on other taps. However, transformer manufacturers may guarantee the impedance to tighter tolerances if requested.

The third condition is that all transformers should have approximately the same voltage ratio. If they are equipped with OLTCs, the voltage ratio of each transformer is determined by the position of its OLTC. Differences in the open circuit voltages, ΔV_S, drive a circulating current I_C that is given by ΔV_S / (Z_{T1} + Z_{T2}); Z_{T1} is the impedance of the transformer with the higher voltage and Z_{T2} is the parallel impedance of all the other transformers. When two transformers are operating in parallel, each transformer carries the same circulating current regardless of its MVA rating. This issue becomes a serious consideration if it is planned to operate dissimilar transformers of different MVA ratings in parallel. The duty on the smallest transformer becomes relatively most onerous.

The circulating current lags the driving voltage by 90° because the impedances of transformers are predominantly inductive. This also means that changing tap position of a transformer that is operating in parallel with other transformers mainly influences the reactive current flows and hardly at all the active current flow. The unequal sharing of active load current between normal transformers (having the tap winding in-phase with the main winding) is not influenced by OLTC control to any significant extent. Phase-shifting transformers on the other hand have their tap windings in a phase other than the main winding to which they are connected so that they can be used to equalise the sharing of active load current (this in fact is their principal function).

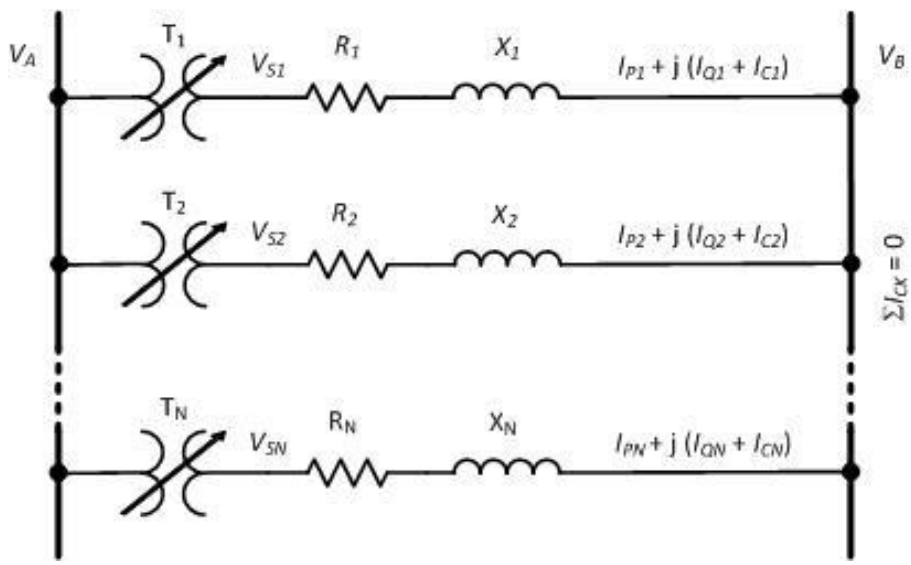

Figure 81 — Circulating currents due to voltage differences

The active and reactive components and circulating currents in each transformer can be calculated using the Kirchhoff's laws if the open circuit voltages of transformers and their impedances are known. The voltage of the load bus for all transformers is the same and is given by the following equation for the case shown in Figure 81.

$$V_B = V_{SN} - \left[I_{PN} R_N - \left(I_{QN} + I_{CN} \right) X_N \right] - j \left[\left(I_{QN} + I_{CN} \right) R_N + I_{PN} X_N \right] \quad (19)$$

The sum of circulating currents is zero and the sum of load currents is the total load current on the bus.

5.1.3.2 Need for parallel control

Two or more transformers, each with an AVC independently controlling its OLTC to maintain its secondary voltage within tolerances, operating in parallel could “drift apart”. A small difference between their VT ratios, voltage measurement accuracy, set point or timers could occasionally result in one of them changing taps in one direction before the others. After the tap change the voltage deviation could reduce and the other transformers may not change tap. However, if the voltage change were in the opposite direction, one of the other OLTCs might have changed the tap first. The consequence is that OLTCs could end up at opposite extremes of their taps resulting in large uncontrolled circulating currents flowing between those transformers. Also, the OLTC, whose operating time is consistently faster than the time of the other OLTCs, would result in the faster OLTC completing the tap changing operation first. One of the following OLTC parallel control methods should, therefore, be used to keep the OLTCs “in step” for minimising the voltage differences and, hence circulating currents, while at the same time keeping the voltage within tolerance. Each AVC in the scheme should use the same method of parallel control and the same settings.

NOTE: A form of parallel control is also required in the case of single-phase transformers forming a three-phase bank when each single-phase tap-changer is fitted with its own motor-drive mechanism. In such cases there is no concern with minimising circulating currents but rather with maintaining a balanced three-phase voltage. A variant of master-follower control is the most appropriate for this purpose. Depending on individual phase loads, it may be better to have three individual single phase controls to provide balanced voltages.

The following are the main methods of parallel control of transformers.

(a) **Master-Follower control:** this type of control maintains all parallel transformers on the same tap. It works for identical or very similar transformers connected in parallel on both HV and LV sides and also for single-phase transformers in a three-phase bank.

(b) **Circulating Current control:** this type of control minimises the circulating current between transformers operating in parallel. The transformers do not have to have identical tap steps.

(c) **Reverse Reactance control:** This type of control minimises the difference in open circuit voltages and hence the circulating current between transformers operating in parallel. The transformers do not have to have identical tap steps but their primary windings do need to be connected directly in parallel. This is the only control method that requires no connections between the control wirings of the AVCs of the transformers except for summated load current if LDC is required. Each transformer has its own AVC and "looks after itself". The method is best suited for emergency conditions and for applications in which the load magnitude and load power factor do not vary significantly (the power factor does not have to be unity). Significant change in the magnitude or power factor of the load causes a shift in the control voltage range and, therefore, a bus voltage error.

(d) **The VAR balance method:** This method minimises the differences between the reactive loads as a fraction of rated power or the load power factors of the transformers operating in parallel. The transformers do not have to have identical tap steps nor need to connect their primary windings directly in parallel.

(e) **Power Factor balance method:** This method also minimises the differences between the reactive loads as a fraction of rated power or the load power factors of the transformers operating in parallel. The transformers do not have to have identical tap steps nor need to connect their primary windings directly in parallel. The VAR balance and Power Factor balance methods give very similar results.

The first three methods have been used for more than 50 years, initially with electro-mechanical relays and hard-wired circuit elements, such as reactors and resistors. The main change has been the introduction of digital electronic relays. This change started in a small way in the mid 1980s and gathered momentum through the 1990s. The VAR or power factor balancing methods were initially introduced in the mid 1990s as an improvement to the conventional circulating current control schemes. The new digital relays still use essentially the control principles previously used in electromechanical controllers but have many operational advantages. Some of the advantages are as follows.

— Integrated AVC, LDC and parallel control functions, monitoring and alarms

— Communications between IEDs and to SCADA RTUs, substation control schemes, ethernet LANs etc

— Self-monitoring

— Data logging

5.1.3.3 Master-Follower method of parallel control

The objective of the Master-Follower control is to keep all transformers operating in parallel on the same tap step. This method is suitable for controlling parallel operating transformers that have the same number of taps and the same tap-step voltage and they are connected to the same buses on the HV and LV sides. The method may not work very well if each HV is connected to a different incoming line because the voltages on the HV sides of the transformers may have differences resulting in circulating currents. The transformers must be bussed on both the source and load sides for this paralleling method to work properly.

It may be possible to have more than one group of transformers operate in parallel; each group operating independent of each other if the substation bus arrangement permits.

All transformers of a group operating in parallel are equipped with an AVC when Master-Follower technique is used. The controller of one transformer is selected to be Master. All other parallel transformers of the group are then selected to be Followers. In many implementations, the selector switches connect the Master relay's raise and lower contacts to all the paralleled OLTC raise and lower circuits so the one relay directly controls all OLTCs.

Any transformer not operating in parallel with other transformers should be selected to Independent mode so that it may control its own secondary voltage. Care should be taken to avoid running one of the transformers operating in parallel with other transformers in independent mode because it would tend to get out of step as explained above. Traditionally, the operators would manually select each transformer's mode: Master, Follower or Independent. Modern schemes often use auxiliary contacts on the transformer circuit breakers and bus couplers to automatically select Master-Follower-Independent mode based on which transformers are actually in parallel.

Another implementation of this method is to have only one AVC relay (or a main and backup relay) to permanently control all transformers. This method works well in substations with a single secondary bus so that all loaded transformers at the substation are always in parallel.

There needs to be feedback that all transformers are in step before changing tap. This is often done by using auxiliary tap position contacts in the OLTC drive mechanisms of all transformers connected in series so that the control circuit is open circuited if one transformer is out of step. The simplest such circuit which is often used is known as "Odd-Even" control. The auxiliary tap position contacts are connected together in such a way that the control circuit is complete if all transformers are on an odd tap (1, 3, 5 …) or all on an even tap (2, 4, 6 …). As long as all the transformers start off on the same tap they will remain so. An alarm is given if the tap-changers

get out of step. In theory one could start on tap 9 and another on tap 11 and they would remain two taps apart. Again, one would have to rely on the operators to avoid this situation.

The traditional Master-Follower control schemes described above require a lot of control wiring between parallel operating transformers. The wiring need is reduced if modern digital electronic controls are used. Moreover, sophisticated implementations of Master-Follower control also become possible with this technology. In one such system the AVC relays are connected together using a multi-drop serial interface to exchange information about which AVC relay is master, what tap position each transformer is on, and to communicate Raise and Lower commands from the Master to the Followers. Also it is then possible for the Master to determine on which tap all the transformers should be and each Follower can then control its own tap position accordingly and move onto the correct tap regardless of how far apart it was to start with. These features require reliable and accurate measurement of tap position.

5.1.3.4 Circulating Current Method of Parallel Control

The most commonly used method for controlling operation of transformers connected in parallel consists of minimising the circulating current. A generic diagram of two transformers connected in parallel is shown in Figure 82; this figure shows two OLTC transformers, T1 and T2, connected in parallel via circuit breakers, CB1 and CB2, and a bus tie circuit breaker, CB3 that connects the two low-side buses. The transformers share loads that are connected to one or more circuits connected to the two low-side buses.

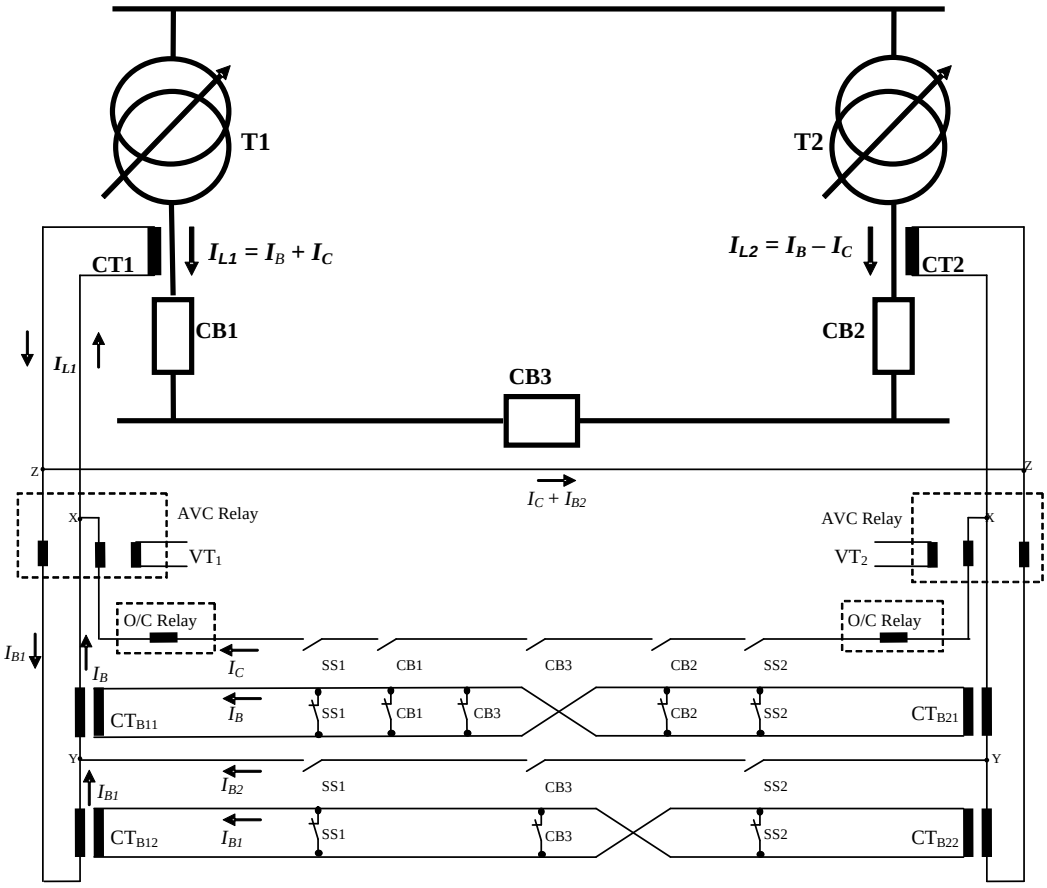

Figure 82 — Circulating Current Paralleling Control – Simplified Circuit

The open circuit voltages of all transformers operating in parallel are in phase; if the open circuit voltages are not equal, a circulating current, I_C, flows. The circulating current lags the highest open circuit voltage by approximately 90° because the impedances in the paths of the circulating currents are predominantly inductive.

The total current supplied by the transformers is I_{L1} and I_{L2} as shown in Figure 82. The load component of the total current is I_B and is the same for both transformers. The circulating current, I_C, is half of I_{L1}-I_{L2} and is generally called the circulating current. This current also includes the unbalanced load current due to the difference between the impedances of the two transformers.

The control equipment for each transformer comprises of the following major components

1. An AVC relay with three inputs: A VT input for AVC, a circulating current input for parallel control and an optional LDC circuit. The purpose of providing the components and functions they perform are as follows.
   1.1. The circulating current input provides a compounding voltage proportional to I_C times the sensitivity setting external to the AVC control. The quadrature component of I_C is the sum of the circulating current and the VAr component of unbalanced load current. These together result in a compounding voltage practically in-phase or anti-phase with the main voltage. This is added to the measured voltage in such a way that the tap of the transformer with the higher induced secondary voltage would be changed to lower the voltage and the tap of the other transformer would be changed to increase its induced voltage. The in-phase (watts) component of unbalanced load current would produce a component of compounding voltage at 90° to the main voltage and would have negligible effect. This approach minimises the sum of circulating current and unbalanced load var current. Some controls have algorithms that numerically remove the in-phase component because it does not affected by the tap position.
   1.2. The LDC input provides a compounding voltage proportional to LDC current I_{B1} times the impedance setting to control the voltage at the remote end of a circuit.
   1.3. The circulating current and LDC voltages are provided by devices external to the AVC relay in older style AVC relays.
2. Optional over-current relay for alarm and AVC inhibit if the circulating current exceeds a pre-set limit.
3. Voltage transformers VT_1 and VT_2 connected to their main transformer secondary windings upstream of transformer circuit breakers CB1 and CB2, because if a circuit breaker opens its VT continues to measure the transformer secondary voltage to maintain control.
4. Main CTs (CT_1 and CT_2) to measure each transformer's secondary current.

   Note: The main CTs must have the same polarity and be in the same phase, and ideally the same ratio for all transformers. The standard rated secondary current for this scheme is 200 mA, so if the main CTs have a rated secondary current of 1A or 5A then an interposing CT 1.0/0.2A or 5.0/0.2A is required for each.
5. The circuit uses make-before-break auxiliary contacts in the three circuit breakers, shown in the figure in the "breaker open" position. One normally open and one normally closed contact is used in each of CB1 and CB2 and two normally open and two normally closed contacts are used in CB3. These contacts are used to automatically determine whether the transformers are connected in parallel or not and activate or deactivate parallel control.
6. Parallel-Independent selector switches (SS1 and SS2) with make-before-break contacts, two closed and two open when in the Independent position are provided as shown Figure 82. If it is required to take one transformer out of service for maintenance, its control selector switch should be set to Independent. This short circuits auxiliary CTs (CT_{B11}, CT_{B12}, CT_{B21} and CT_{B22}) and open circuits the spill paths xx and yy.

7. Identical auxiliary balancing CTs (CT_{B11} and CT_{B21}) provide circulating current control. The secondary windings of these CTs are cross connected in series, as shown in Figure 82, forcing their primary currents to be equal. The primary currents are thus I_B and the unbalanced component I_C is forced to flow in path xx, through the circulating current circuits of the AVC relays, the over-current relays and auxiliary contacts as shown in this figure. If any of the circuit breakers are open, the transformers are not in parallel. The breaker's auxiliary contacts open-circuit the path for I_C and short-circuit the secondary windings of CT_{B11} and CT_{B21} allowing their primary currents to be different. Similarly switching SS1 or SS2 to Independent open-circuit the path for I_C and short-circuit the CT secondary windings.
8. Additional auxiliary balancing CTs (CT_{B12} and CT_{B22}) are used for LDC as an option. The purpose of these CTs is to prevent doubling of LDC that would otherwise occur whenever one transformer is switched off, causing the load current in the other to double. When the transformers are in parallel each CT primary carries $I_{B1} = I_B$ and the current I_{B2} in path yy is zero. If one transformer is switched the balance CTs force I_{B2} to become equal to $I_B/2$ through path yy so the current I_{B1} also becomes equal to $I_B/2$. Since I_B has doubled, the current through the LDC circuit is the same as before. If bus tie CB3 opens, each transformer continues to operate in independent mode, each carrying the load on its side of the bus tie. No doubling of LDC occurs and the mechanism of preventing that is not required. Figure 82 shows that in this case the CB3 auxiliary contacts short circuit both pairs of auxiliary CTs and open the circuit between the YY nodes. Thus each LDC circuit carries a current proportional to its own transformer's load current.

Figure 82 and discussion in this section apply to two transformers operating in parallel. However, this approach can be extended to control three or more transformers operating in parallel by using the same control equipment on each of those transformers.

5.1.3.5 Reverse Reactance Method of Parallel Control

The Reverse (or Negative) Reactance method of parallel control minimizes the connections required between transformers operating in parallel. It is, therefore, useful for "rapid response" mobile transformers that are kept as spares and moved to and installed in substations in emergencies. Also, this technique is useful for controlling groups of transformers of different makes. The transformers do not have to have identical step-voltage or number of taps. The main perceived disadvantage of this technique is that the controlled voltage varies from zero to full load current and also depends on load power factor.

The principle of Reverse Reactance control can be explained as follows. Consider "N" transformers operating in parallel, each with a different open-circuit secondary voltage V_S and impedance Z as shown in Figure 83. The secondary voltage of all transformers is the same; let this voltage be V_B. This results in a circulating current I_C in each transformer. The open-circuit voltage of each transformer can be calculated as

$$V_{SN} = V_B + I_C Z_N \tag{20}$$

Consider that V_{S0} is the control voltage; each LDC can be controlled by its AVC relay to bring the open-circuit secondary voltages of all transformers to the same set-point voltage. This would then eliminate circulating currents. Because the transformers can have different step voltages and different primary voltages, it may not be possible to make their secondary voltages exactly equal but the voltage differences and circulating currents can be minimized.

The original reverse reactance schemes derived the compounding voltage by passing a current proportional to load current through an X–R series circuit external to the relay as is done by the LDC in Figure 79. The voltage across the inductance is used with opposite polarity to polarity in

of the LDC; therefore, this technique is called “reverse” or “negative” reactance technique. The *IX* drop in other LDCs simulates the voltage downstream towards the load but the *IX* rise in reverse reactance simulates the voltage upstream. If *X* is made equal to the transformer impedance, the controlled voltage would be approximately equal to the open-circuit transformer secondary voltage, V_{SN}. The load current and, therefore, compounding voltage would drop to zero if the load-side breaker was suddenly opened. The measured voltage would rise to the open-circuit voltage and the control voltage would remain unchanged.

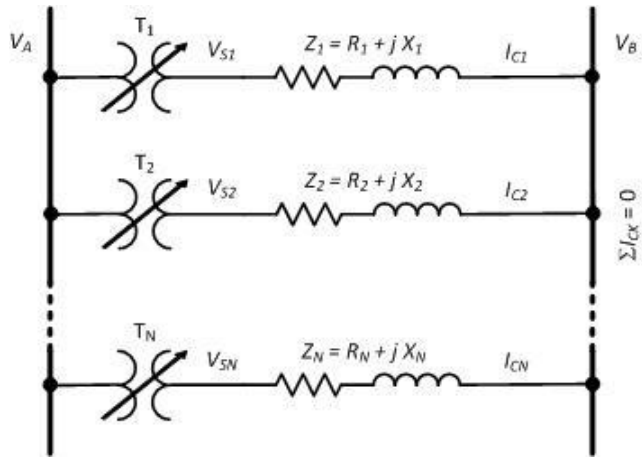

Figure 83 — Reverse Reactance Control

There is, in general, a range of reactance settings that may be used. To ensure stability, two transformers operating in parallel should be only one tap step apart and the compounding voltage should be less than the set-point tolerance. Otherwise, the transformer on the higher tap would tap down while the transformer on the lower tap would taps up. This would reverse the operating conditions and the transformers would tap back to their previous positions resulting in hunting. This leads to the condition that the maximum allowed value of *X* is the transformer impedance. Higher values could result in "hunting" as discussed above. Lower values of *X* would result in looser coupling that would eventually result in the possibility that transformers could operate one or two tap steps apart. The bandwidth settings of the controls are also an important factor in determining the reverse reactance, *X*, setting.

As mentioned above, using lower values of *X*, typically half the transformer impedance, improves stability. It also effectively provides an intermediate tap position that can be used for finer voltage control and also has the advantage that the voltage control is less dependent on load power factor.

Each transformer needs its own VT preferably permanently connected to the transformer secondary winding. This enables the AVC relay to continue to control the transformer secondary voltage even if the circuit breaker controlling the transformer trips. If the VT is connected to the bus, then an auxiliary contact on the circuit breaker is required to automatically disable AVC if the circuit breaker controlling the transformer trips, otherwise it would continue to try to control the bus voltage even though it is not measuring it. This could potentially cause it to raise its own secondary voltage to unacceptably high levels.

5.1.3.6 VAR Balance and Power Factor Balance Methods of Parallel Control

The principle of the VAR Balance method is that the ratio of reactive power to transformer rating is measured for each transformer and their OLTCs are controlled to minimise the differences between them. In the Power Factor Balance method the load power factor in each transformer is measured and their OLTCs are controlled to minimise the differences between them. These

methods do not measure the circulating current per se but achieve the same result if all transformers operating in parallel have the same MVA rating and impedance, or if the load has unity power factor.

Some VAR balance relays use a circuit similar to the circulating current scheme with CB auxiliary contacts to determine which transformers are in parallel. Some digital electronic AVC relays use serial communications to exchange this information.

5.1.4 Automatic voltage control using numerical techniques

Numerical relays for automatic voltage control (AVC) offer a number of advantages compared to the traditional techniques implemented with static and electromechanical relays. The algorithms for AVC relays generally incorporate different control modes, such as independent, master-follower, reverse reactance and circulating current modes in a single device. Imaging the topology of busbars of large substations, avoiding simultaneous tap changing of more than one transformer and regulating hot stand-by transformers are examples of what can be incorporated in control of operating transformers in parallel. Taking into account capacitor bank switching, tap changer wear monitoring, hunting detection, power flow direction monitoring, etc. are some other examples of functionality readily available in numerical AVC relays.

5.1.4.1 Control of a single transformer

The basic control principles, described in Section 5.1.2, are also implemented in numerical AVC relays. These controls include set point voltage with outer and inner dead bands, inverse or definite two step time delays, load drop compensation (LDC) etc. Other features can be automatic adjustment of the set point voltage depending on the load current and load shedding based on voltage reduction. In addition to these features, the numerical relays have recording and communication possibilities and can have integrated overcurrent protection to block tap changing.

5.1.4.2 Parallel control of transformers

Parallel control is implemented either in one single control relay where all the necessary information from each transformer is brought in to the relay or in multiple relays, one for each transformer in the parallel group. Information concerning circuit breaker and isolator status is also brought into the AVC relay if busbar topology needs to be considered,. Alternatively, the control functions are distributed in more relays. Various degrees of decentralization exist and this depends on the manufacturer and the number of transformers included in the voltage control function. The highest degree of decentralization is a voltage control system with one relay per transformer and with separate busbar topology relay(s).

In a decentralized system all controllers need to communicate with each other and other devices; these days IEC 61850 is implemented for this purpose. Complete exchange of AVC data, analogue as well as binary, is then takes place on GOOSE inter-bay communication.

The following three methods of parallel control with numerical relays are briefly described in this section.

— Master – Follower

— Reverse Reactance

— Circulating Current

5.1.4.2.1 Parallel control with the Master-Follower method

Master-Follower automatic voltage control using electromechanical and solid state relays is described in Section 5.1.3.3. The Master-Follower scheme implemented with numerical technology can keep all transformers in the parallel group on the same tap, or alternatively keep followers individually on a tap position offset to the master when a numerical AVC relay that receives information of tap position from each individual transformer is used. In some numerical AVC relays, it is also possible to set individual time delays for each follower for raising and lowering taps to avoid simultaneously changing taps of more than one transformer. Automatic selection of a master in a parallel group is also an available feature. When the AVC is decentralised, different possibilities including IEC 61850-8-1 for communication of tap positions and commands exist.

5.1.4.2.2 Parallel control with Reverse-Reactance method

Parallel control with Reverse-Reactance method using solid-state and electromechanical technologies is described in Section 5.1.3.5. This method for parallel control is simply that a negative reactance and a resistance (positive) are entered in the LDC function. Also a combination of reverse reactance control and LDC can be achieved by entering the sum of the required impedances. The use of this method with numerical relays is mainly useful in situations that have decentralized AVC relays without easy access to communication.

5.1.4.2.3 Parallel control with Circulating-Current method

Application of Parallel control with Circulating-Current method with electromechanical and solid-state technologies is described in Section 5.1.3.4. The use of this technique with numerical relays takes full advantage of calculating the circulating currents and their distribution amongst all transformers operating in parallel. The technique is briefly described in this section.

The real and imaginary parts of the current in each transformer are calculated from acquired samples of the current waveforms; the total load current, I_L, is then calculated from the currents in all transformers operating in parallel. The load current, therefore, is as defined in the following equation.

$$I_L = \sum_{i=1}^{k} I_i \tag{21}$$

where,

i is the transformer number and

k is the number of parallel transformers in the group.

The magnitude of the circulating current $I_C(i)$ can be calculated as follows.

$$I_C(i) = -\mathrm{Im}(I_i - K_i \times I_L) \tag{22}$$

where,

Im signifies the imaginary part of the expression in brackets and

K_i is a constant that depends on the number of transformers in the parallel group and their short circuit reactances.

The AVC relay can automatically calculate the constants, K_1, K_2, etc and update them when number of transformers in the parallel group changes. The minus sign is introduced in the above equation to get positive values of the circulating current for the transformer that generates it.

The voltage deviations for all the transformers are calculated using the following equation.

When the circulating current in each transformer has been calculated, a voltage deviation U_{di} for the respective transformer can be derived with the following formula:

$$U_d(i) = C_i \times I_C(i) \times X_i \tag{23}$$

where,

$U_d(i)$ is the voltage deviation of transformer i
X_i is the reactance of transformer i
C_i is the setting parameter with which the sensitivity of the AVC is tuned

The magnitude of the no-load voltage for each transformer is approximately given by:

$$|U_i| = |U_B| + |U_d(i)| \tag{24}$$

where,

U_B is the measured busbar voltage

In the parallel control algorithm, this value for the no-load voltage can be regarded similarly to the measured busbar voltage for a single transformer. For a transformer producing/receiving circulating current, the calculated no-load voltage will be greater/lower than the measured busbar voltage U_B. This calculated no-load voltage is thereafter compared with the voltage set point U_{SP}. A deviation which is outside the dead-band for a time t1 (or t2) will then result in a Lower or Raise command to the OLTC.

The algorithm avoids simultaneous changing of taps and distributes tap changing actions evenly among the transformers operating in parallel. To achieve this objective, the AVC algorithm selects the transformer with the greatest voltage deviation $U_d(j)$ for changing the tap after time a delay t_1. The tap of the transformer with the then greatest value of $U_d(m)$ from among the remaining transformers in the group is then changed after a further time delay of t_2. This procedure is continued. The circulating current is calculated after the tap of a transformer is changed. In case two transformers have equal magnitude of $U_d(n)$, a pre-determined sequence of changing taps of those two transformers is followed.

5.1.4.2.4 Homing (Hot standby)

One feature that is available in numerical relays is homing that is a situation in which a transformer is energized from the HV side, the isolator on the LV side is closed but the circuit breaker on the LV side is open. It is reasonable that such a transformer follow the voltage regulation of the parallel group to which it belongs.

The AVC acts in the following way for a transformer that is in the homing state:

- The AVC algorithm calculates the “true” busbar voltage, by averaging the voltage measurements of the transformers that are actually operating in parallel. The voltage measurement of the homing transformer is not included in the calculation.
- The value of this true busbar voltage is used in the same way as the set point voltage for control of a single transformer. The homing transformer is then automatically controlled by changing tap with appropriate time delay to keep its LV side voltage within the deadband of the bus voltage.

5.1.4.2.5 An example of parallel control in a large substation

Figure 84 shows the block diagram that includes the arrangement of bay controllers and automatic tap change controllers. Figure 85 outlines the design of an ATCC system capable of controlling up to seven transformers and six busbars. The following abbreviations are used in Figure 85.

Acronym	Device Name
ATCC	Automatic Tap Changer Controller
CB	Circuit Breaker
DBI	"Don't Believe it" status for a CB or Disconnector
HMI	Human Machine Interface
HV	High Voltage
LON	Local Operating Network
LV	Low Voltage
RCP	Remote Control Point
SCP	Substation Control Point
SCS	Substation Control System
TCIP	Tap Changing operation In Progress
TPI	Tap Position Indicator

The busbars are operated in busbar groups consisting of four transformers in parallel in this case. The control-system design does not limit the transformer groups to four transformers. However, this was an operation limit for the power system operator in this case.

It is a distributed system in the respect that the voltage regulating algorithms are executed locally in each ATCC relay. The relays are connected to the voltage on the LV side. One of the phase currents on the LV side is used for calculating the circulating current and over-current protection of the OLTC.

The block diagram in Figure 85 is an overview that shows the connections and how the information is communicated around the system that consists of one ATCC relay for each transformer and two topology bay controllers (BCs). The communication between the system terminals as well as with the Microscada is on a LON network and a star-coupler because this system was commissioned before IEC 61850 was released. Hard-wired into the ATCCs are LV Circuit Breaker indications for identifying homing condition, tap position, tap changer motor MCB indication as well as current and voltage measurements of the LV side. Current and voltage measurements are passed around the ATCC terminals via the Lon bus.

LV busbar apparatus indications are provided to the low voltage BCs. The LV circuit breaker indications are hardwired into the low voltage BCs and the ATCCs. Information about status of the equipment is sent to the topology BCs via the LON bus. The topology BCs receive this information and work out which transformers are connected to which busbar and whether transformers are connected in parallel or not. The topology BCs also receive information about operation control mode (Auto Control IN or Auto Control OUT) and Target Voltage selection for each of the LV busbars, and store this information in memories that retain data even if power is lost.

The operation control mode (Auto IN/OUT) and Target Voltages are received from the SCS level via the LON-bus. The topology BC terminals then send this information to each ATCC.

When the conditions alter due to a switching action or plant fault condition then it is detected in the topology BCs. The topology BCs then decide the action that should be taken for the rest of the system.

5.2 Integrated protection and control

Traditionally, the main protection provided for power transformers has been relegated to the application of transformer phase differential and backup phase and ground overcurrent relays. With the advent of modern multifunction transformer relay packages, phase differential and overcurrent are only two of the many protection functions that are integrated into the numerical IED devices. The added functionality of these devices has resulted in defining new principles mainly for the main and backup protection within the same device.

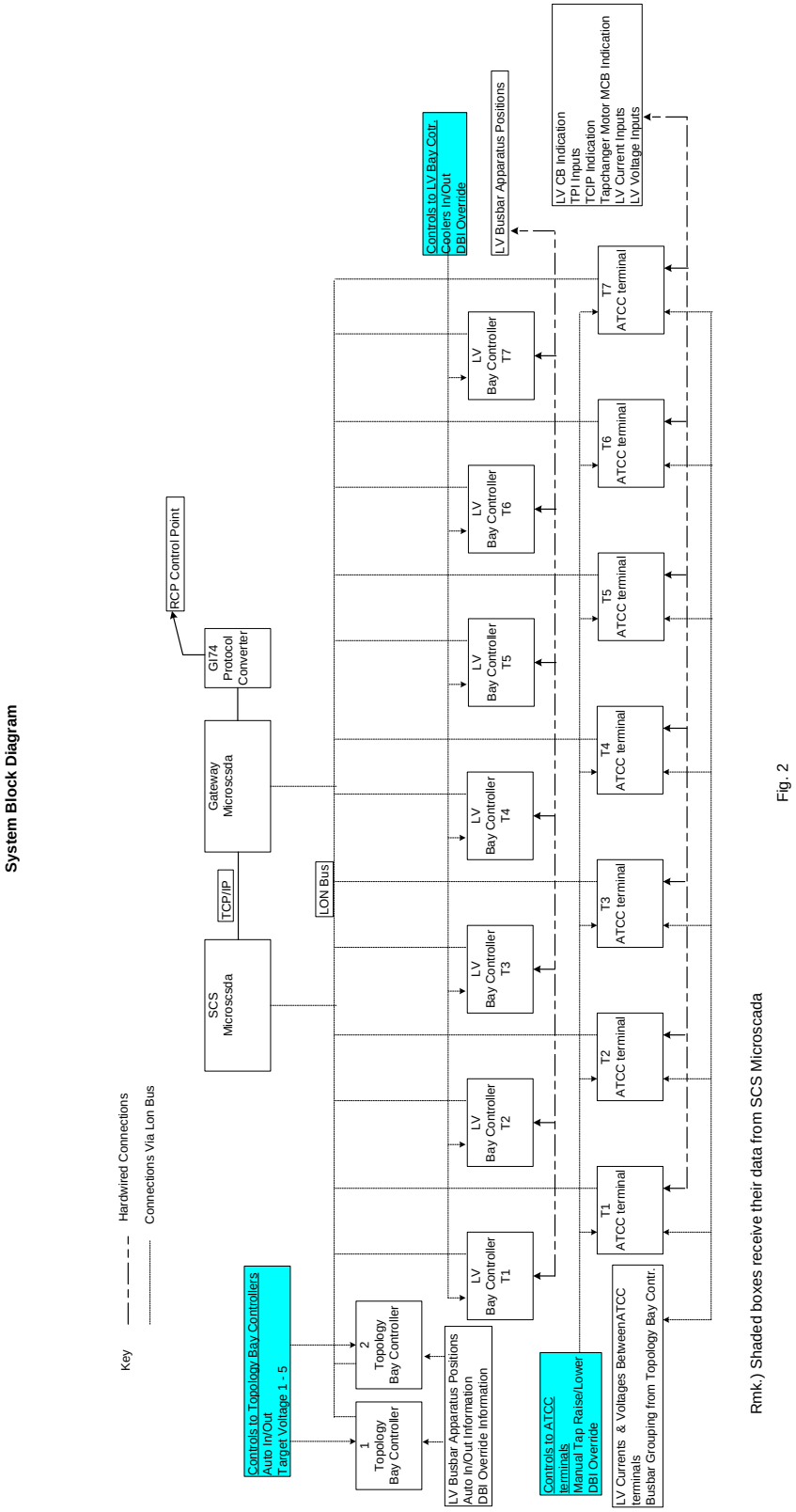

Figure 84 — Block diagram of Bay and ATCC controllers

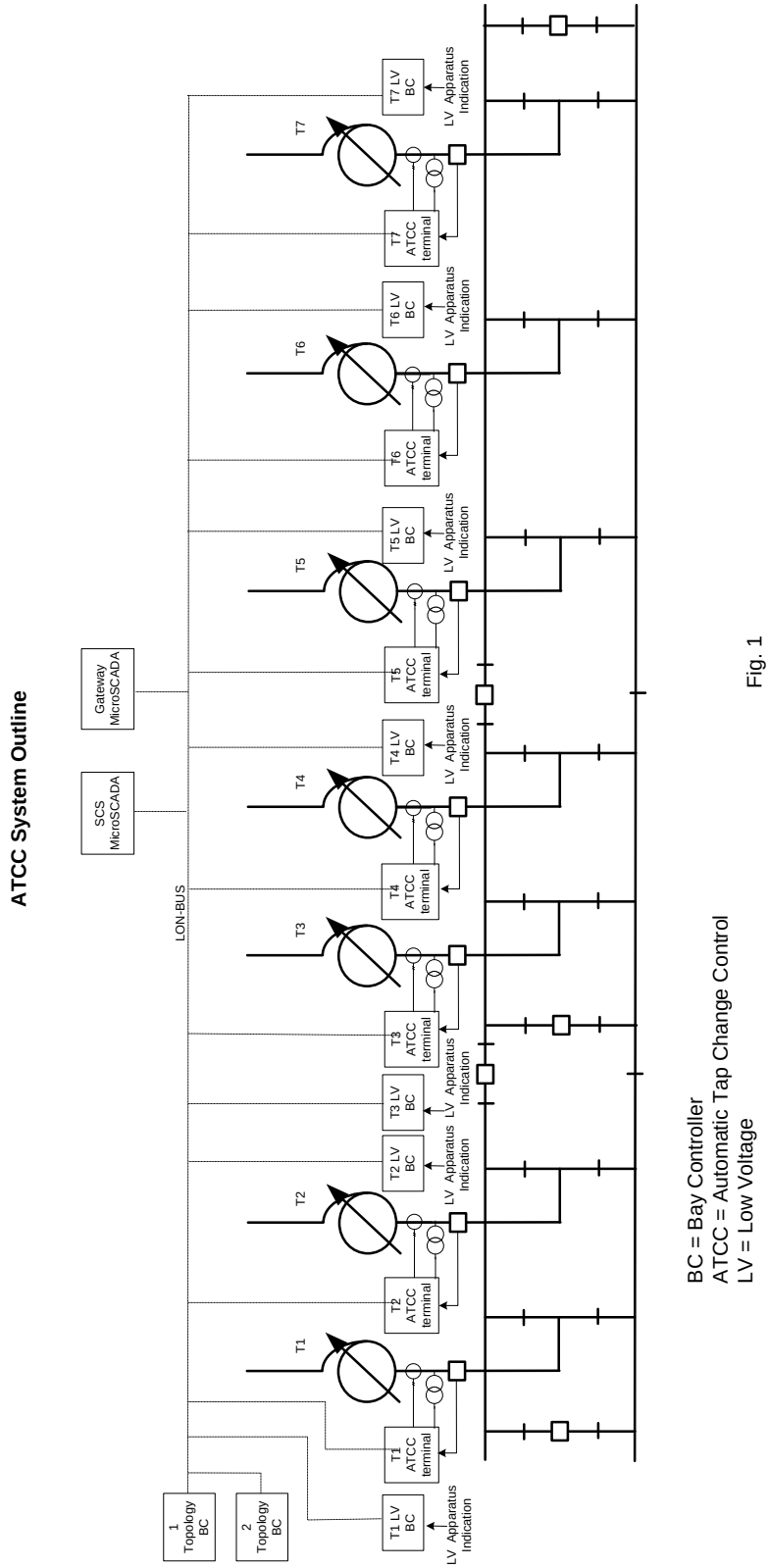

Fig. 1

Figure 85 — Outline of the design of a control system for a large substation

6. Numerical techniques

Large power transformers are expensive and vital components of electric power systems. It is, therefore, necessary to minimise the frequency and duration of unwanted outages. This places high demand on protection systems for detecting faults and isolating the faulted equipment before major damage occurs. Also, unnecessary isolation of equipment needs to be avoided. This makes the protection of equipment including the protection of transformers a challenging problem [25].

Magnetising inrush current generally contains a large second harmonic component in comparison to an internal fault. Conventional transformer protection systems are, therefore, designed to restrain during inrush transient phenomenon by sensing the large magnitude of the second harmonic component in the operating current [26]. However, the second harmonic component may also be generated during internal faults if CT saturation occurs, a shunt capacitor is in the vicinity of the transformer or the transformer is connected to a long EHV transmission line [27]. In certain cases, the magnitude of the second harmonic in an internal fault current can be close to or greater than that present in the magnetising inrush current. Moreover, the second harmonic components in the magnetising inrush currents tend to be relatively small in modern large power transformers because of improvements in the power transformer core material [28]. Consequently, the commonly employed conventional differential protection technique based on the second harmonic restraint may have difficulty in distinguishing between an internal fault and an inrush current. Alternative, improved protection techniques for accurately and efficiently discriminating between internal faults and inrush currents are needed.

Several numerical techniques have been published in the literature. Samples of six types of techniques are presented in this section to give the readers an idea of technique used more often for processing sampled and quantized data. The readers may consult proceedings, transactions and journals on power systems technologies for other techniques.

6.1 Computing Phasors from Sampled and Quantized Data

Before the methods for computing phasors are described, it is important to review the definition of a phasor.

6.1.1 Definition of a phasor

Phasors are defined in most power system analysis textbooks [10]. Waveforms of voltage at a power system bus and currents in the circuits connected to the bus can be assumed to be sinusoids of constant frequency. Phasors are used by power system engineers to represent these sinusoidal functions of time. A phasor is a complex number whose modulus is either the peak value of the sinusoid or its RMS value. The argument of the complex number is the phase angle that defines the delay (or advance) of the positive going zero crossing of the waveform from a selected instant of time t=0. A sinusoidal voltage waveform and its mathematical and phasor representations are as follows.

Sinusoidal voltage waveform: $v(t) = V_m \cos(\omega t + \phi)$ (25)

Phasor representation: $\bar{V} = V_m e^{j\phi}$ (26)

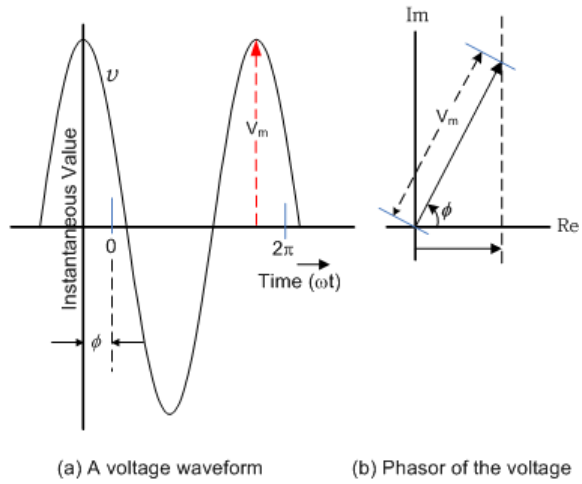

Figure 86 — A sinusoidal waveform and its phasor representation

6.2 Fourier Transform based methods

6.2.1 Discrete Fourier transformation

Fourier series analysis is a way of representing a real-valued periodic signal as a sum of harmonic (sine and cosine) components at well defined frequencies [11]. Just as a Taylor series gives a local description of a signal, a Fourier series gives a global representation that is mathematically convenient and has a real physical interpretation in terms of frequencies. The business of finding the coefficients of the Fourier representation of a finite sampled data within a data window can be interpreted as a regression analysis wherein the explanatory variables are the values taken by a variety of sine and cosine functions throughout the data window. For sampled data, Fourier analysis is performed using the discrete Fourier transform (DFT) and the details are described in 10.1 Fourier Transform.

In power system applications, Fourier-series analysis is a method suitable for processing the sampled and quantized signals and for determining their fundamental and harmonic frequency components. Both, the voltage and current signals within a data window are transformed to the frequency domain and the transformed quantities are used to calculate the apparent impedance to the fault or differences of currents entering and leaving a power system component. This method is insensitive to harmonics but has some errors when a waveform contains a DC offset.

6.2.1.1 Smart discrete Fourier transformation

Smart Discrete Fourier Transform (SDFT) is used to deal with the difficulty of frequency deviation errors [12]. SDFT is a recursive and easy to implement procedure that keeps the advantage of DFT while it deals with the cause of frequency deviation errors. Consider an operator of varying frequency as follows.

$$a = \mathrm{e}^{j\frac{2\pi}{N}(1+\frac{\Delta f}{f_0})} \tag{27}$$

where,

f	is the fundamental frequency
N	is the number of samples per period of the fundamental frequency
Δf	is the deviation from the fundamental frequency

Multiplying a complex number by the operator "*a*" leaves the magnitude of the complex number unchanged and increases the angle by

$$\frac{2\pi}{N}(1+\frac{\Delta f}{f_0})$$

The fundamental frequency component of DFT is divided into two terms to take frequency deviation into consideration; in proportion to the sample index n, the first term is multiplied by "*a*" and the second term by "a^{-1}". Some algebraic manipulation gives a second order polynomial of "*a*" in terms of three consecutive sampled data. The exact frequency and phasor can be obtained from the polynomial. Details of this technique are described in 10.2 Smart Discrete Fourier Transform.

6.3 Least square curve fitting method

The least squares (LSQ) method is used to minimize the fitting error, and has the goal of extracting the fundamental frequency and other harmonic components of voltages and currents [13]. This algorithm is based on the assumption that the current and voltage waveforms can be represented by a combination of waveforms of known frequencies. A decaying component in the waveform composition can also be added. Most least-square applications assume that the waveform being processed consists of an exponentially decaying DC component, a fundamental frequency component and low order harmonics. The exponentially decaying DC component is expanded using Taylor's series and the first two terms of the expansion are used in the model of the waveform. Depending on the total number of components considered, a sampled value can be written in the form of a linear equation with the unknowns, such as the magnitudes and the phase angles of the fundamental and harmonic frequency components. In this manner, *m* linear equations are generated from consecutive *m* sampled and quantized values of the waveform. More that *m* linear equations are used for solving the *m* unknowns. Details of this algorithm are given in 10.3 Least Squares Approach.

6.3.1 Prony's method

Prony's analysis [14] and [15] extends Fourier analysis by directly estimating the frequency, time constant, magnitude, and relative phase of the modal components of a waveform. This method is based on the assumption that a waveform can be approximated by a combination of damped exponentials, damped complex exponentials, and their conjugates.

When a real-valued signal is formed by q_1 damped exponentials and q_2 damped sinusoids, the total number of modal components, *p*, becomes q_1+2q_2 because the damped sinusoids are divided into the damped complex exponentials and their conjugates. The *p* modal components are necessarily the solutions of an algebraic equation of order *p*. The unknown coefficients can be obtained using consecutive 2*p* quantized samples of a waveform. The modal components and their complex magnitudes are determined by solving the algebraic equation. The magnitude and the phase of the fundamental frequency component are obtained from the modal components and their complex magnitudes. The details of this technique are provided in 10.4 Prony's Method.

It is, however, almost impossible to use this method in real time when the order signal, *p*, is larger than three because solving a high order algebraic equation imposes too much computational burdens.

6.4 Kalman filter based method

Application of a state-variable model brings forth estimators in the form of Kalman Filters [16], [17], [18] and [19]. The Kalman filters were introduced as candidates for voltage and current phasor estimation [17]. A Kalman filter is an optimal estimator that is especially well suited to on-line digital processing because the input data is processed recursively. The requirement for rarely available a priori noise characteristics is, however, the key disadvantage of this technique.

The Kalman filters are initialized with an estimate of the signal and its error covariance. Each sample as it becomes available in real time is used to update the previous estimate. The initial estimate is successively improved until a steady state condition is reached where no further improvement is obtained. The details are described in Section 10.5 Kalman Filter Based Method.

6.5 Transformer Modeling Techniques

An approach reported in the literature consists of protecting a transformer by modelling its performance for detecting if it is experiencing an internal fault or not [20] and [21]. The approach is first described in this section with reference to a single-phase transformer and is then extended for applying the approach to a three-phase delta-wye transformer.

6.5.1 Modeling single phase transformers

Consider a two-winding single-phase transformer whose electro-magnetic arrangement is shown in Figure 87.

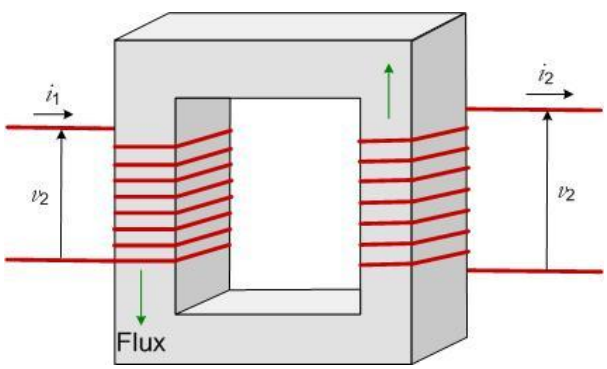

Figure 87 — Electromagnetic circuit of a single phase transformer.

The primary voltage, v_1, can be expressed as a function of the primary current, i_1, resistance of the primary winding, r_1, the leakage inductance of the primary winding, l_1, and the mutual flux linkages, Λ(t) as follows.

$$v_1 = r_1 i_1 + l_1 \frac{di_1}{dt} + \frac{d\Lambda}{dt} \tag{28}$$

The secondary voltage, v_2, can also be expressed as a function of the secondary current, i_2, resistance of the secondary winding, r_2, the leakage inductance of the secondary winding, l_2, and the mutual flux linkages as follows.

$$v_2 = -r_2 i_2 - l_2 \frac{di_2}{dt} + \frac{d\Lambda}{dt} \tag{29}$$

Equations 28 and 29 when combined to eliminate the mutual linkages provide the following the equation.

$$v_1 = r_1 i_1 + l_1 \frac{di_1}{dt} + v_2 + r_2 i_2 + l_2 \frac{di_2}{dt} \tag{30}$$

Integrating both sides of this equation from time t_1 to t_2, provide

$$\int_{t_1}^{t_2} v_1 dt = \left(r_1 \int_{t_1}^{t_2} i_1 dt \right) + l_1 \left[i_1(t_2) - i_1(t_1) \right]$$
$$+ \left(\int_{t_1}^{t_2} v_2 dt v_2 \right) + \left(r_2 \int_{t_1}^{t_2} i_2 dt \right) + l_2 \left[i_2(t_2) - i_2(t_1) \right] \tag{31}$$

Consider that the time from t_1 to t_2 is one sampling interval (ΔT), and samples taken at t_1 are identified by the subscript k, and the samples taken at t_2 are identified by the subscript k+1. If the trapezoidal rule of integration is used to integrate the various terms, Equation 31 becomes

$$\frac{\Delta T}{2}\left[v_{1(k)} + v_{1(k+1)} \right] = \frac{\Delta T}{2} r_1 \left[i_{1(k)} + i_{1(k+1)} \right]$$
$$+ l_1 \left[i_{1(k+1)} - i_{1(k)} \right] + \frac{\Delta T}{2}\left[v_{2(k)} + v_{2(k+1)} \right]$$
$$+ \frac{\Delta T}{2} r_2 \left[i_{2(k)} + i_{2(k+1)} \right] + l_2 \left[i_{2(k+1)} - i_{2(k)} \right] \tag{32}$$

This equation expresses the integration of the primary voltage as a function of the secondary voltage, the primary and secondary currents, and the transformer parameters. Because the parameters of the transformer are known, the computed value of the right hand side of Equation 32 gives an estimate of the left hand side of the equation.

During normal operation, external faults and magnetizing inrush, Equation 32 is satisfied. On the other hand, the left hand side of Equation 32 is not equal to its right hand side during faults in the protection zone of the transformer.

6.5.2 Application to Three Phase Transformers

The technique for protecting single-phase transformers can also be applied for protecting three-phase units when they are formed by connecting three single phase transformers to form a three-phase bank. The technique is also suitable for protecting three phase wye-wye (or delta-delta) connected transformers. When a delta-wye transformer is used, the technique is modified as follows because the currents in the delta windings are not measured usually.

The connections of a two winding delta-wye transformer are shown in Figure 88. In this case, the currents in the delta winding have two components, the circulating currents and the non-circulating currents. If the currents in the delta winding of the transformer can be measured, the technique described earlier in this section can be applied. If it is only possible to measure the currents in the lines leading into the delta winding, the non-circulating components of the currents in each winding can be obtained from the measurements of line currents.

The application of the procedure described in the previous section leads to three equations; these equations contain the circulating current as an unknown operating parameter. One of the equations can be used to estimate the circulating current and the other two equations can be used

to determine if there is a fault in the transformer, outside the transformer protection zone or the transformer is experiencing magnetizing inrush. The details of the procedure are given in 10.6 Modeling approach for transformer protection.

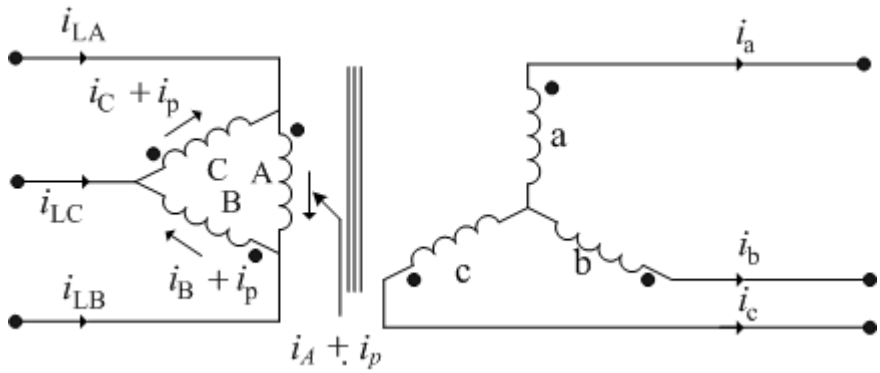

Figure 88 — Current flows in the primary and secondary windings of a delta-wye transformer

6.5.3 Detecting Core Saturation by Flux Monitoring

Because there are no techniques for measuring flux directly, indirect approaches have to be used. The terminal voltage of a transformer can be monitored and the flux in the core can be determined from the observed voltage as a function of time. If the core appears to be saturated, it can be concluded that excessive currents are due to magnetizing inrush. A protection algorithm based on a physical model of a transformer can be obtained from a differential equation which describes the terminal voltage, in terms of the winding current and the flux linkage as in Equation 28. The following equation is obtained by neglecting resistance in that equation.

$$v_1 - l_1 \frac{di_1}{dt} = \frac{d\Lambda}{dt} \tag{33}$$

Integrating both sides of this equation provides the following equation

$$\int_{t_1}^{t_2} v_1(t)dt - l_1[i_1(t_2) - i_1(t_1)] = \Lambda(t_2) - \Lambda(t_1) \tag{34}$$

Rearranging this equation and using the trapezoidal rule for integration provides the following equation

$$\Lambda(t_2) - \Lambda(t_1) = \frac{\Delta T}{2}\left[v_1(t_2) + v_1(t_1)\right] - l_1\left[i_1(t_2) - i_1(t_1)\right] \tag{35}$$

The core flux at the sampling instance k+1 is given by

$$\Lambda_{(k+1)} = \Lambda_{(k)} + \frac{\Delta T}{2}\left[v_{1(k+1)} + v_{1(k)}\right] - l_1\left[i_{1(k+1)} - i_{1(k)}\right] \tag{36}$$

If the initial flux Λ_k were known, Equation 36 could be used to update the flux from current and voltage measurements. The flux plotted as a function of current would be as shown in Figure 89. If the initial flux were not known, then the flux-current characteristic would have the same shape but could be shifted up or down which is also shown in Figure 89. The flux current plot for an internal fault is also shown in this figure.

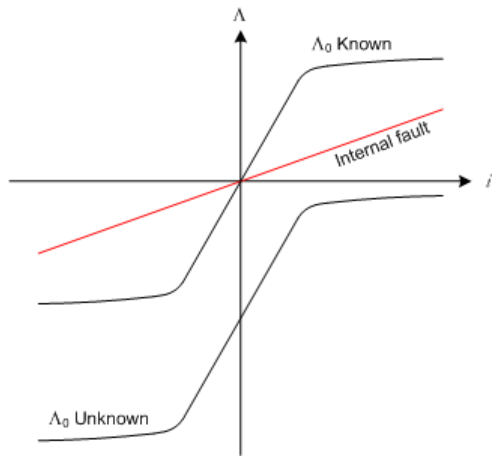

Figure 89 — The flux-current characteristic for known and unknown initial flux

The problem of not knowing the initial flux can be resolved by examining the slope of the flux-current curve. The slope is given by the following equation.

$$\left(\frac{d\Lambda}{di}\right)_k = \frac{\Delta T}{2}\left[\frac{[v_{1(k)} + v_{1(k-1)}}{i_{(k)} - i_{1(k-1)}}\right] - l_1 \tag{37}$$

The slope in the unsaturated region of the open circuit magnetization curve shown in Figure 89 is large whereas the slope during internal faults or operation in the saturated region of the open-circuit magnetizing region is small. The algorithm differentiates between a fault (the slope is always small) and inrush (the slope alternates between large and small values). A counting scheme is used in this application. The counter is increased if the slope is less than a threshold and the differential current indicates trip. When the slope is greater than the threshold or the differential current does not indicate a trip, the counter is decreased.

6.6 Delta-V, Delta-I measurements technique

This section describes a technique that distinguishes between the faults inside the transformer protection zone from faults outside the protection zone [22]. The technique is based on the concept of symmetrical components for developing protection algorithms for transformers (the technique has also been used for protecting transmission lines [23] and synchronous generators [24]). The technique remains stable during CT saturation and ratio-mismatch conditions.

6.6.1 The technique

Figure 90 shows a transformer connected to a system, represented by G_x, on one end and a transmission line on the other. The remote end of the transmission line is connected to a system G_y. The power transformer is protected by relays R_x and R_y. The current flowing into the transformer is considered positive. This system is used to develop the proposed technique for protecting power transformers.

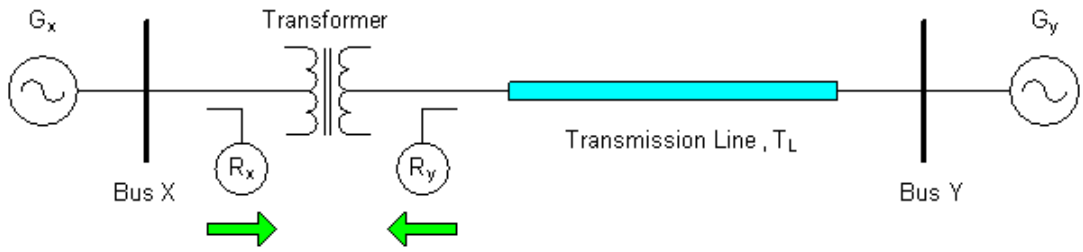

Figure 90 — Circuit used for explaining the proposed technique for protecting power transformers

6.6.1.1 External fault

The pre-fault and fault positive-sequence networks are as shown in Figure 91 (a) and Figure 91 (b) for a fault at Bus Y outside the transformer protection zone. The power transformer is represented by its positive-sequence impedance, Z_{t1}, in the networks. The Thevenin equivalent circuit is shown in Figure 91 (c). The fault impedance is shown as Z_f that could either be the arc-resistance or an impedance equivalent of a combination of the negative and zero-sequence networks of the system appropriately connected to represent an unbalanced fault. The Thevenin voltage, V_{y1}, is the pre-fault positive-sequence voltage at the fault location. E_{x1} and E_{y1} are the positive-sequence internal voltages for the generators G_x and G_y respectively. The positive-sequence incremental voltages, ΔV_{x1} and ΔV_{y1} and incremental currents, ΔI_{x1} and ΔI_{y1}, can be expressed as follows:

$$\Delta V_{x1} = V_{Rx1(fault)} - V_{Rx1(pre\text{-}fault)} \tag{38}$$

$$\Delta V_{y1} = V_{Ry1(fault)} - V_{Ry1(pre\text{-}fault)} \tag{39}$$

$$\Delta I_{x1} = I_{Rx1\,(fault)} - I_{Rx1(pre\text{-}fault)} \tag{40}$$

$$\Delta I_{y1} = I_{Ry1\,(fault)} - I_{Ry1(pre\text{-}fault)} \tag{41}$$

In these equations, $V_{Rx1(pre\text{-}fault)}$, $V_{Rx1(fault)}$, $I_{Rx1(pre\text{-}fault)}$, $I_{Rx1(fault)}$ are the voltages and currents at the location where relay R_x is provided before and after the occurrence of a fault. Similarly, $V_{Ry1(pre\text{-}fault)}$, $V_{Ry1(fault)}$, $I_{Ry1(pre\text{-}fault)}$, $I_{Ry1(fault)}$ are pre-fault and fault voltages and currents at the location where relay R_y is provided.

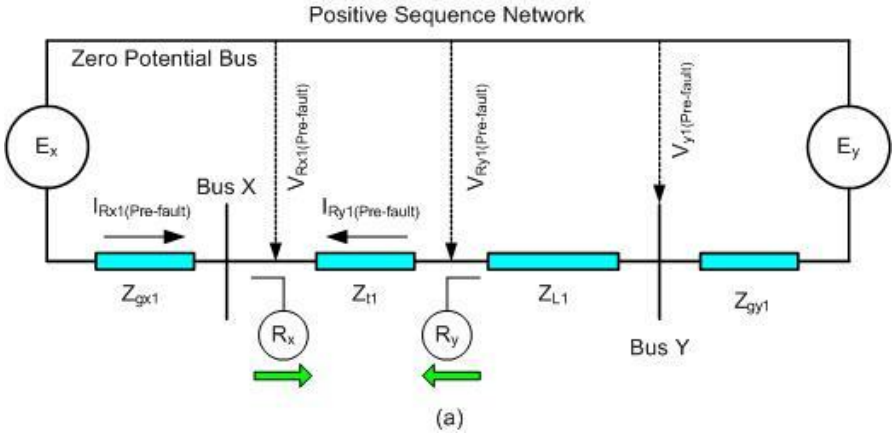

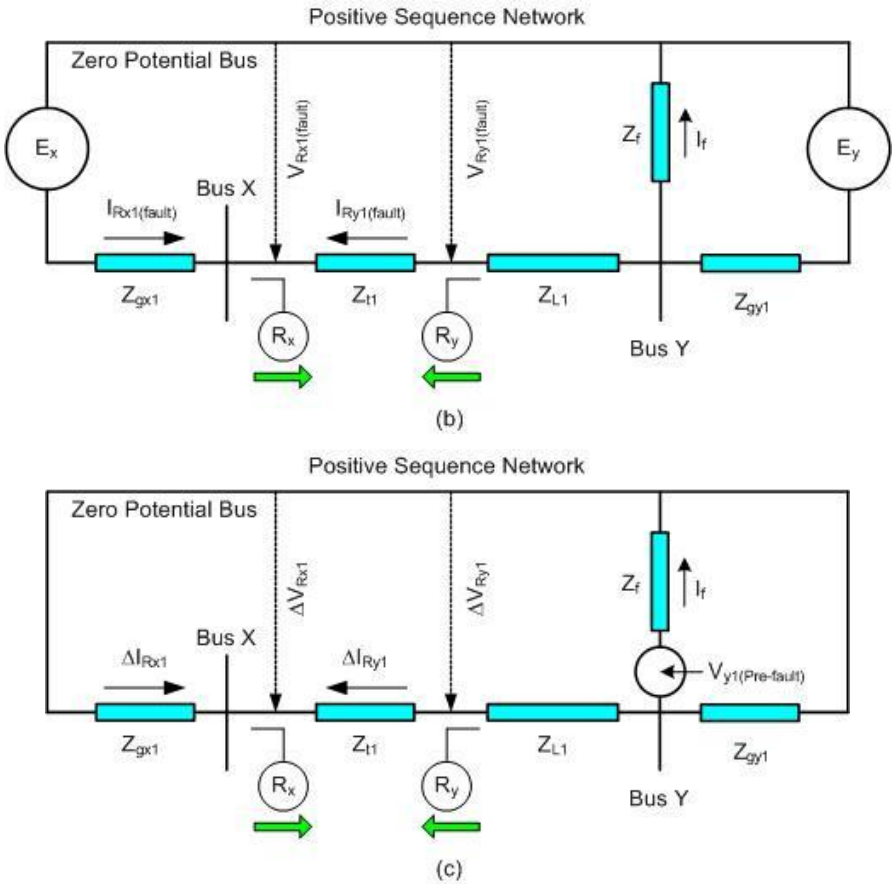

Figure 91 — Positive-sequence networks for the power system of Figure 90 for an external fault (a) Pre-fault circuit, (b) fault circuit and (c) Thevenin equivalent circuit

The positive-sequence pre-fault and during fault voltages and currents at R_x and R_y can be expressed in terms of generator voltages, relay currents and system parameters. The ratio of the incremental sequence-voltages and the incremental sequence-currents are as follows.

$$\frac{\Delta V_{x1}}{\Delta I_{x1}} = -\mathrm{Zgx1} \tag{42}$$

$$\frac{\Delta V_{y1}}{\Delta I_{y1}} = +\left(Z_{gx1} + Z_{t1}\right) \tag{43}$$

$$\frac{\Delta V_{x2}}{\Delta I_{x2}} = -Z_{gx2} \tag{44}$$

$$\frac{\Delta V_{y2}}{\Delta I_{y2}} = +\left(Z_{gx2} + Z_{t2}\right) \tag{45}$$

6.6.1.2 Internal fault

The positive-sequence networks for a fault in the transformer zone are shown in Figure 91. Z_{L1} is the positive-sequence impedance of the transmission line. The constant, *m*, defines the fault-location in the power transformer and can be assumed to have values in the range from 0 to 1. Using an approach similar to that used in Section 6.6.1.1, the positive- and negative-sequence impedances seen by the relays R_x and R_y are given by the following Equations.

$$\frac{\Delta V_{x1}}{\Delta I_{x1}} = Z_{gx1}; \qquad \frac{\Delta V_{y1}}{\Delta I_{y1}} = -\left(Z_{gy1} + Z_{L1}\right)$$

$$\frac{\Delta V_{x2}}{\Delta I_{x2}} = -Z_{gx2} \qquad \frac{\Delta V_{y2}}{\Delta I_{y2}} = -\left(Z_{gy2} + Z_{L2}\right) \tag{46}$$

In this equation, Z_{gy2} and Z_{L2} are the negative-sequence impedances of the generator G_y and transmission line respectively.

6.6.2 Fault-Detection Characteristics

Inspection of Equations 42 to 46 leads to following observations:

> The value of impedance seen by the relays R_x and R_y lies in the third quadrant of the impedance plane for a fault in the protection zone of the transformer but for a fault outside the protection zone of the transformer, the impedance seen by one relay lies in the first quadrant and the impedance seen by second relay lies in the third quadrant. Thus, faults outside the protection zone of the transformer can be distinguished from those inside the protection zone by checking the quadrant in which the impedances seen by the two relays lie.

Figure 92 depicts the zones of fault-detection in the impedance plane for faults occurring inside and outside the transformer protection zone.

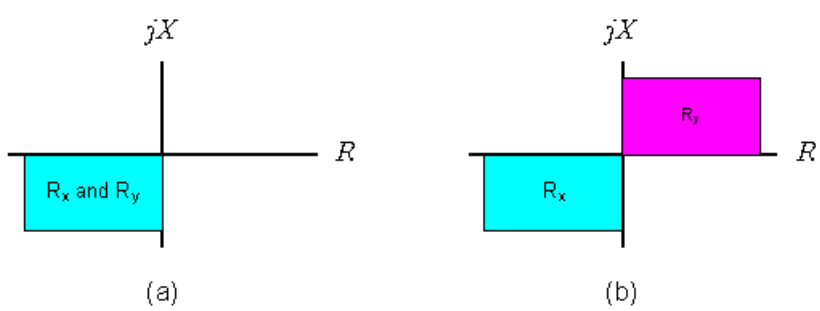

Figure 92 — Fault-detection characteristics for a loaded transformer (a) Internal fault (b) External fault

6.6.3 Practical Issues

6.6.3.1 Effect of CT saturation

The performance of protection schemes are adversely affected by CT saturation. Most algorithms use special criteria to detect CT saturation and delay the operation of relays to avoid incorrect operations. As seen from fault-detection characteristics of the proposed technique, the impedance

seen by the relays can lie in first and/or third quadrants. This allows a wide range for variations in the argument of the impedance but still provide correct identification. Therefore, if the argument changes due to CT saturation, the impedance calculated in this approach continues to lie in the correct quadrant. The algorithm, therefore, is not affected by CT saturation.

6.6.3.2 Effect of CT ratio-mismatch

Because the relay does not take into account the magnitude of the impedances, the performance of the algorithm is not affected by CT ratio mismatch.

6.7 Waveform pattern recognition technique; signature analysis

Recently, Artificial Neural Network (ANN) techniques have been applied to power transformer protection to distinguish internal faults from magnetising inrush currents [29] through [32]. The main advantage of the ANN method over the conventional method is the non-algorithmic parallel distributed architecture for information processing.

An effective method is used at a pre-processing stage for extracting the most significant features from the input waveforms for improving the performance of the ANN. The wavelet transform is a useful tool for analyzing power system transients because it extracts information from the transients simultaneously in the time and frequency domains. Recently, the wavelet transforms have been applied to analyse the power system transients [33], power quality [34], as well as fault location and detection problems [35]. In reference [36], the wavelet transform has been used for analyzing the transient phenomena in a power transformer during faults and during magnetising inrush currents as well as simultaneous fault and inrush conditions.

The technique presented in this section discriminates between an internal fault and a magnetising inrush condition by combining the wavelet transform and neural network techniques. The wavelet transform technique is firstly applied to decompose differential current waveforms of into a series of detailed wavelet components; each component of the output is a time-domain signal that covers a specific frequency band. The spectral energies of the wavelet components are calculated and then employed to train a neural network to discriminate internal faults from magnetising inrush currents. The effectiveness and robustness of the technique is demonstrated by firstly training and testing a 750MVA, 27/420 kV transformer connected to a power system, and secondly, by testing its performance for a 35MVA, 11/132 kV transformer system. The simulated results show that the proposed technique can discriminate between an internal fault and a magnetising inrush current in different power transformers.

6.7.1 Simulation of Power Transformer Transients

Two different power transformers, transformer 1 and transformer 2, are used in the study reported in this section. In system 1, a typical 750MVA, 27/420 kV, Dy11 power transformer is connected between a 25 kV source at the sending end and a 400kV transmission line connected to an infinite bus power system at the receiving end. The system 1 configuration and its three-phase connection diagrams are shown in Figure 93 and Figure 94 respectively. In Figure 94, I_{ad}, I_{bd} and I_{cd} refer to differential currents provided by CTs provided in a, b and c phases; n_1 and n_2 are the ratios of the CTs on the low voltage (LV) and high voltage (HV) sides respectively. System 2 is the second transformer that is a 35MVA, 11/132 kV, Yy0 unit.

Transient waveforms used in the case described in this section were generated by an emtp software. In each simulation, the power transformer faults and system parameters were varied,

including the fault types, fault positions, fault inception angles and remnant fluxes in the power transformer core. The effect of CT saturation is also included.

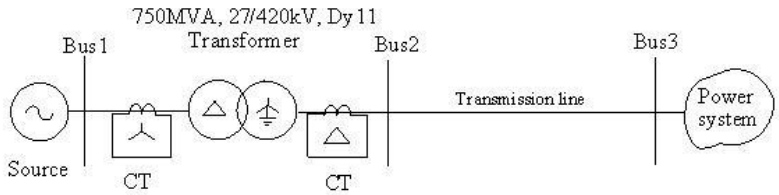

Figure 93 — A generating station connected to a system via a transformer and transmission line

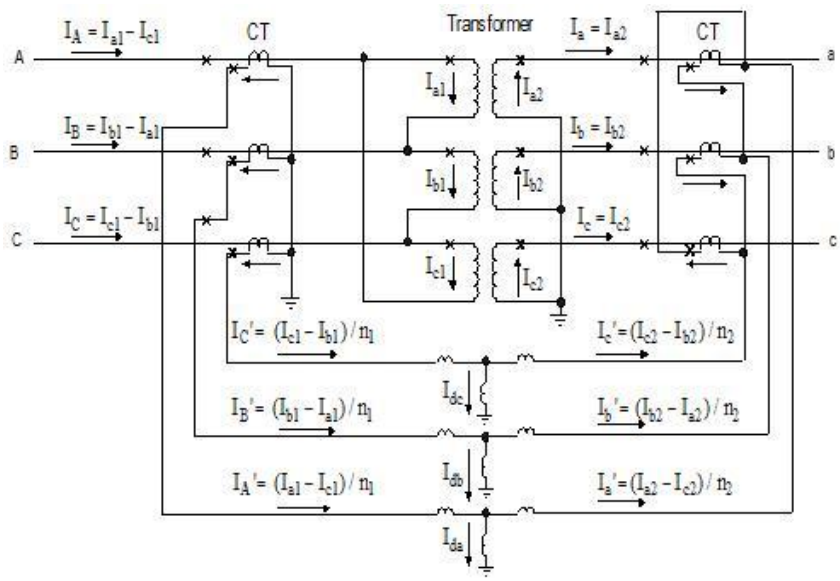

Figure 94 — Three phase diagram of the transformer differential protection

6.7.2 Implementation of Wavelet Transform

There are many types of mother wavelets, such as Harr, Daubichies, Coiflet and Symmlet wavelets. The choice of mother wavelet plays a significant role in detecting and localising different types of transients. In addition to this, the choice also depends on a particular application. The interest in this application is to detect and analyze low amplitude, short duration, fast decaying and oscillating type of high frequency currents. Daubichies's wavelet D4 is used in this report.

Figure 95 illustrates the implementation procedure of a Discrete Wavelet Transform (DWT), in which x[n] is the original signal, h[n] and g[n] are low-pass and high-pass filters, respectively. At the first stage, an original signal is divided into two halves of the frequency bandwidth by the low-pass and high-pass filters. The outputs of the filters are down-sampled by a factor of 2. The procedure is repeated until the signal is decomposed to a pre-defined level. The set of outputs thus attained represent the original waveform but all correspond to different frequency bands.

The frequency band of each detail of the DWT is directly related to the sampling rate of the original waveform. The sampling rate, F_s Hz, should be chosen so that the Nyquist's criterion is satisfied. The highest frequency that can be extracted would be 0.5-F_s Hz. This frequency would be seen at the output of the high frequency filter, which is the first detail. Thus the band of

frequencies between 0.5-F_s and 0.25-F_s would be captured in detail 1; similarly, the band of frequencies between 0.25-F_s and 0.125-F_s would be captured in detail 2, and so on.

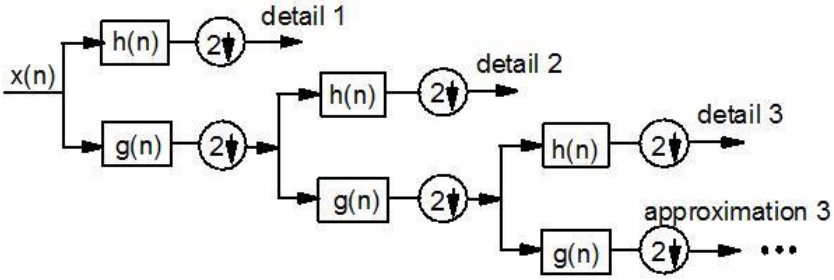

Figure 95 — Implementation procedure of a Discrete Wavelet Transform

6.7.2.1 Wavelet Transform of Magnetizing Inrush Current

A transient magnetising inrush current flows in the primary winding when a power transformer is energized from the primary side with the secondary winding open-circuited. This current may reach instantaneous peaks of 6-8 times full-load current because of the extreme saturation of the core in the power transformer. Figure 96 (a) typifies the magnetising inrush current waveforms of differential currents from the CT secondary sides of phases a, b and c of transformer system 1.

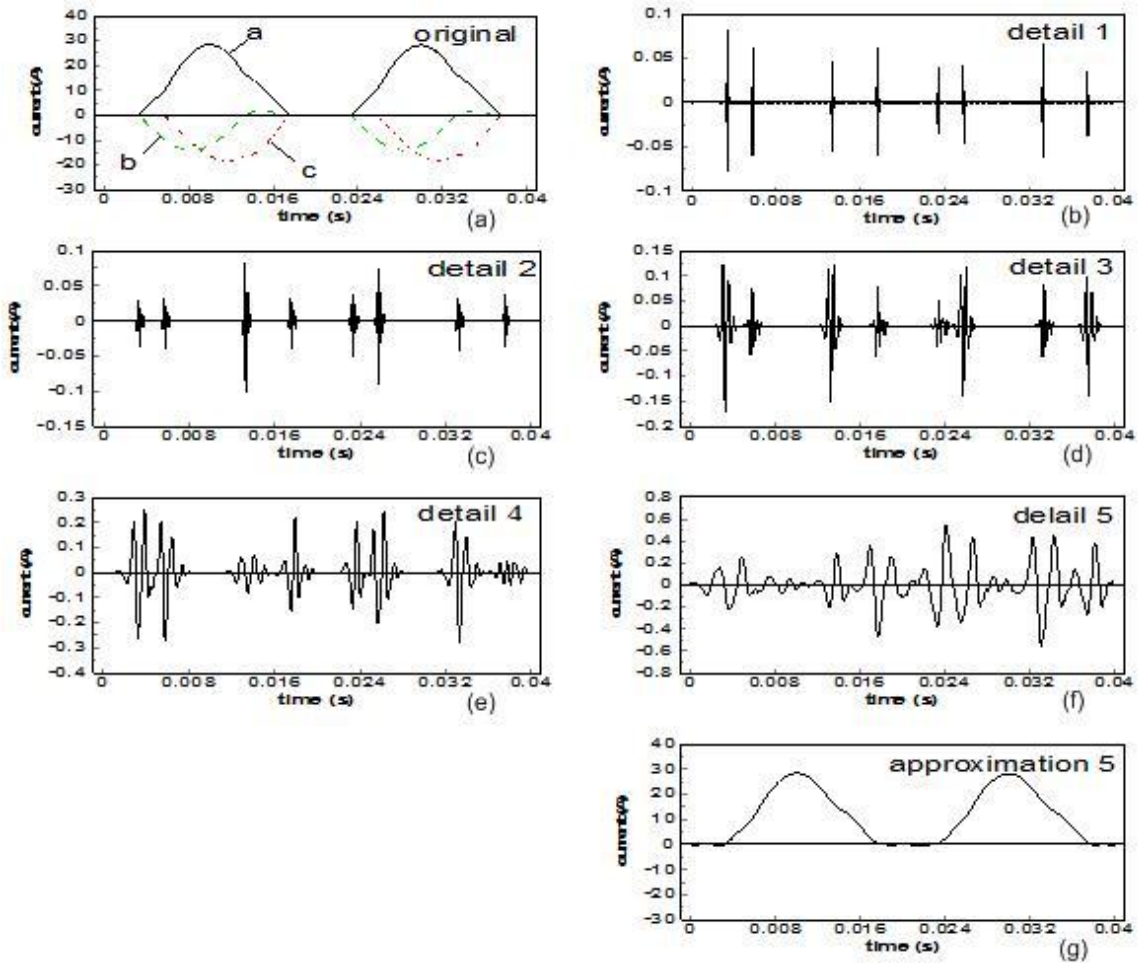

Figure 96 — Details of and approximations for the magnetizing inrush current

This figure shows that the current waveforms are distorted significantly; gaps appear in the inrush current waveforms. At the edges of the gaps, the current magnitude changes from near zero to a significant value or from a significant value to near zero; this is expected by virtue of the fact that sudden changes from one state to other states produce small ripples that are not often not visible due to the large fundamental frequency signals as apparent from Figure 96 (a). However, these phenomena can be discerned (in terms of the various signatures) and is clearly demonstrated by the wavelet transform. For brevity, only the DWT of the a-phase differential current is shown in this figure.

The original inrush current waveform has been sampled at 25 kHz and passed through a DWT based on the structure shown in Figure 95. Five detailed outputs that contain a frequency band of 12.5 kHz ~ 6.25 kHz at detail 1, 6.25 kHz ~ 3.125 kHz at detail 2, 3.125 kHz ~ 1.562 kHz at detail 3, 1.562 kHz ~ 781 Hz at detail 4, 781 Hz ~ 390 Hz at detail 5 and one output in the frequency band 390 Hz ~ DC level are shown in Figure 96 (b)-(g). These figures show that there are very useful features in the decomposed magnetising inrush signals. A certain high frequency component can be located better in time than a low frequency component. In contrast, a low frequency component can be located better in the frequency domain than the high frequency component. This means that all the features for a particular signal are obtained. In this study, the interest is in the components that are located better in time; details 1-3 are analyzed and their features are extracted.

Figure 96 (b)-(d) that correspond to details 1-3 show a number of sharp spikes during the period of the inrush-current transient. A number of the spikes arise at the edges of gaps at which the inrush current suddenly changes from one state to other different states; others are produced because the primary windings of the power transformer are connected in delta configuration and the differential current of phase-a is in fact the difference between the phase-a and phase-c magnetising inrush currents. This results in the non-smooth points in the current waveforms that in turn cause sharp spikes to appear in the DWT of the current waveforms.

6.7.2.2 Wavelet Transform of Internal Fault Current

Figure 97 shows waveforms of currents and DWT outputs for phase-a and phase-b to ground fault on the high-voltage side. Figure 97 (a) shows differential currents of phases a, b and c out the CT secondary windings for this fault internal fault. The figure shows that there is high frequency distortion in the current waveforms. This is due to the distributed nature of the inductance and capacitance of the transmission line.

For brevity, only the DWT of the phase-a differential current is presented in Figure 97 (b)-(g); details 1-3 of the DWT show several sharp spikes immediately following the inception of the fault. However, there is a marked contrast to the spikes in the inrush current case. The spikes in the fault case decay to near zero within one cycle, whereas the spikes associated with the inrush current suffer from little attenuation during the entire inrush transient that lasts from 0.20 s for small transformers to 1 minutes for large units [26]. It is apparent that this difference can be effectively used as the key feature to distinguish the internal fault from the inrush current.

6.7.2.3 Wavelet Transform of External Fault Current with CT Saturation

Differential current is used in transformer protection systems to restrain during normal load flows and during external faults. However, external short circuits can result in large differential currents if one or more CTs saturate. It is, therefore, crucial to check the impact of CT saturation on the measured currents during external faults. The severity of CT saturation is accentuated by the presence of remnant flux in the CT core. Figure 98 (a) shows the waveforms of simulated differential current out of secondary windings of CTs during an external three-phase short circuit

at Bus 2 in Figure 93. The initial remnant flux was 65% of rated flux in the core of the CT of phase-a on the low voltage side, and a zero remnant flux in phase-a CT core on the high voltage side. Figure 98 (a) shows that the differential in phase-a is substantial.

Figure 98 (b)-(d) show details 1-3 of the DWT; these figures shown that there are several spikes that last during the entire period of the transient that depends on the DC component and the remnant flux of CT core. However, unlike the case for inrush current, these bursts comprise of a number of spikes clustered very close to each other. Here again, it is the apparent unique features that can be used to distinguish between an internal fault and an external fault with CT saturation.

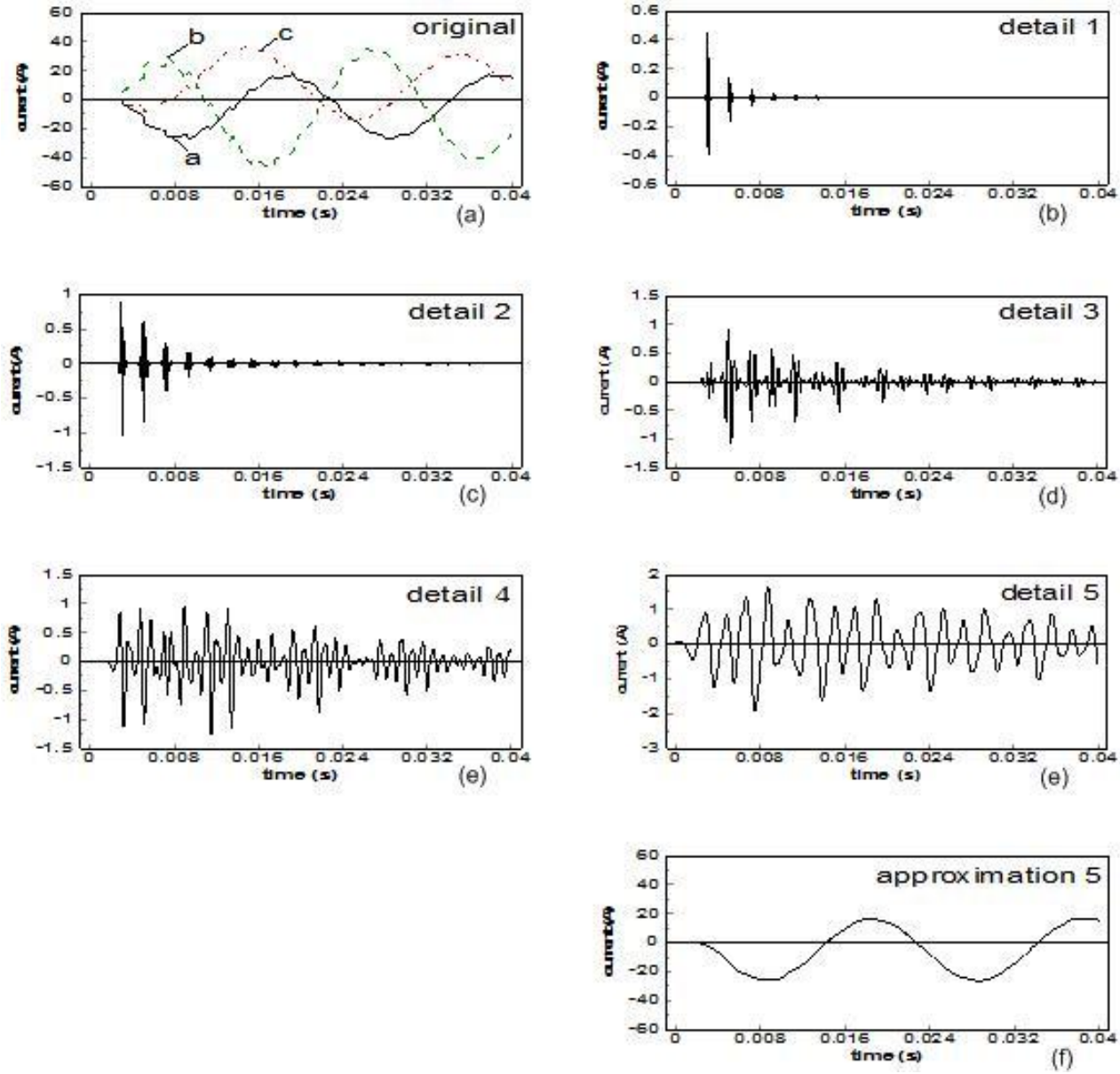

Figure 97 — Details and approximation for a phase-a to phase-b to earth fault on high-voltage side

6.7.3 Neural Network Architecture

Selection of neural network and its training are described in this section.

6.7.3.1 Input Selection of Neural Network

The input data for the neural network is organised in the form of a moving data window of a fixed length of a half cycle (10 ms at 50Hz frequency). It is not practical to directly use the windowed wavelet signals as the input to ANN, because this would result in a large number of inputs to the ANN requiring that the size of the ANN be large thereby causing difficulty in ANN converging to a solution. The use of the signal spectral energy overcomes this drawback. Essentially, in this approach, spectral energy of the wavelet is calculated within the time length ΔT; this not only reduces ANN size but also retains the important features of the wavelet signals. The data window was divided in three equal time periods in this study to calculate the spectral energy. This provided nine samples from details 1-3 for each phase. Thus, for a, b and c phases, there were a total of 27 samples that were fed into the ANN.

A step length of ¼ cycle (5ms at 50 Hz frequency) of the moving window was used. This sliding motion put ¼ cycle of the new spectral energies at the front of the window and discarded ¼ cycle of the spectral energies from the end of the previous window.

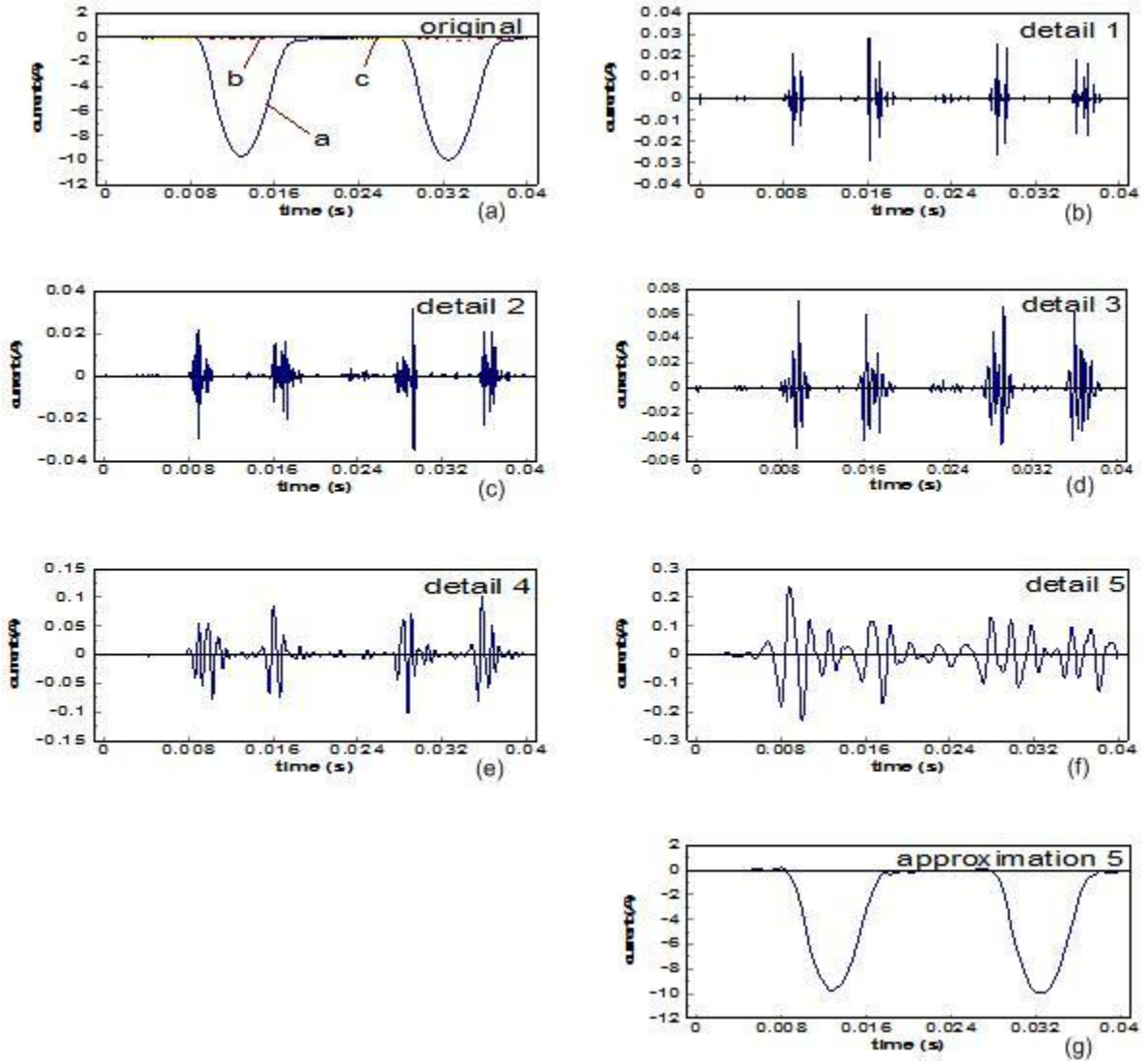

Figure 98 — Details and approximation for external fault under CT saturation

6.7.3.2 Neural Network Structure and Training

Neural networks have been developed in a wide variety of configurations; each configuration has its individual characteristics, advantages and disadvantages. In this study, a multi-layer feed-forward network was used. The target output of the ANN was built in such a way that output 1 represented an internal fault; output -1 represented a magnetising inrush current or an external fault current.

One of the most critical problems in constructing the ANN is the choice of the number of hidden layers and the number of neurons for each layer. Using too few neurons in the hidden layer may prevent the training process to converge, while using too many neurons would produce long training time, and/or result in the ANN to lose its generalisation attribute. In this study, a number of tests were performed varying with the one or two hidden layers as well as varying the number of neurons in each hidden layer. Table 9 shows the architectures tested for this purpose. The data in this table shows that the combination of five neurons in the first hidden layer and four neurons in the second hidden layer provide best performance; this architecture was adopted in this study.

The selected neural network employs the back-propagation algorithm, and uses the hyperbolic tangent activation function with the cumulative delta rule.

Table 9 — Summary of neural network performances

ANN size	Performance	Correct Patterns	Incorrect Patterns	Classification rate
27/20/10/1	Diverge	-	-	-
27/9/4/1	Converge	97	3	97 %
27/5/4/1	Converge	99	1	99 %
27/20/1	Diverge	-	-	-
27/9/1	Converge	96	4	96 %
27/5/1	Converge	95	5	95 %

Note: Percent classification rate is defined as (Total patterns–Incorrect patterns) × 100 / Total patterns

6.7.4 Combined Wavelet Transform and Neural Network Protection Technique

The proposed relay logic for distinguishing an internal fault from a magnetising inrush current by combining the wavelet transform with neural network is shown in Figure 99.

In this logic, the relay is activated if any one of the three-phase differential currents (through the secondary side of CTs) I_{ad}, I_{bd} or I_{cd} exceed the predefined thresholds. The wavelet transforms are applied to the windowed differential currents I_{ad}, I_{bd} and I_{cd}. Thus, the phase a, b and c wavelet signals $I_{a\text{-}detail,1}$, $I_{a\text{-}detail,2}$ and $I_{a\text{-}detail,3}$ as details 1-3 for phase-a, $I_{b\text{-}detail,1}$, $I_{b\text{-}detail,2}$ and $I_{b\text{-}detail,3}$ as details 1-3 for phase-b and $I_{c\text{-}detail,1}$, $I_{c\text{-}detail,2}$ and $I_{c\text{-}detail,3}$ as details 1-3 for phase-c, are obtained. The spectral energies of the wavelet signals are then calculated by using the following equations.

$$P_{a-\det ail,i} = \sum_{k=1}^{n} I_{a-\det ail,i}^{2}(k)\Delta T \text{ ; i = 1, 2, 3} \tag{47}$$

$$P_{b-\det ail,i} = \sum_{k=1}^{n} I_{b-\det ail,i}^{2}(k)\Delta T \text{ ; } i \text{ = 1, 2, 3} \tag{48}$$

$$P_{c-\det ail,i} = \sum_{k=1}^{n} I_{c-\det ail,i}^{2}(k)\Delta T \text{ i = 1, 2, 3} \tag{49}$$

$P_{a\text{-}detail,i}$, $P_{b\text{-}detail,i}$ and $P_{c\text{-}detail,i}$ represent spectral energies of wavelets in phases a, b and c; i represents wavelet details 1, 2 and 3; ΔT is the time step; n is the number of samples in a window.

The obtained spectral energies of the wavelet signals are then applied to the ANN to determine if the fault is in the transformer, is outside the transformer protection zone or the transformer is experiencing magnetizing inrush. If the fault is inside the transformer protection zone, a trip command is generated otherwise the relay is restrained.

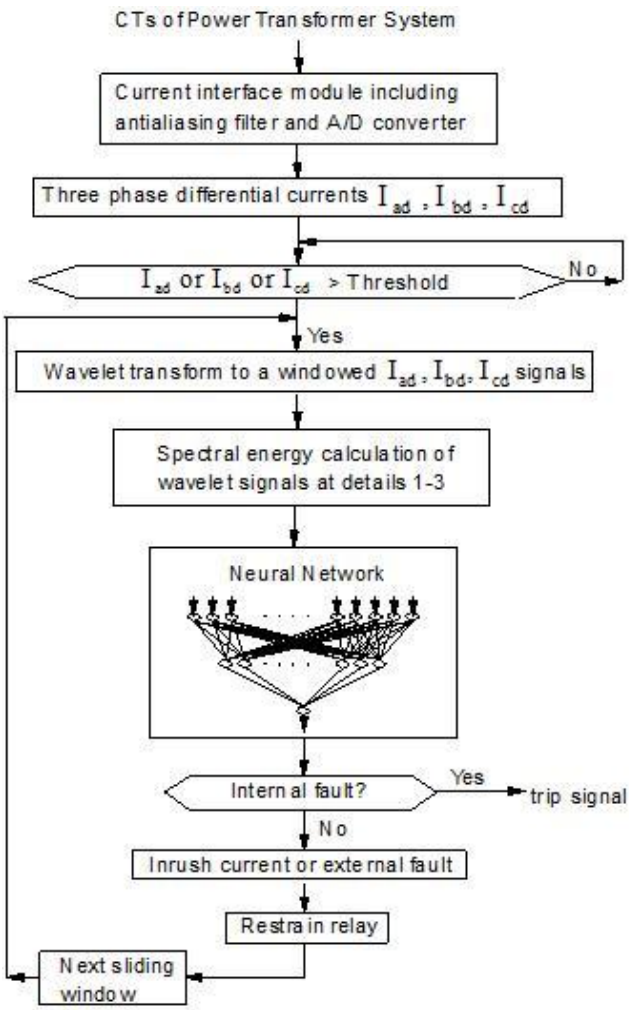

Figure 99 — Relay logic based on wavelet transform and neural network

6.7.5 Response evaluation

Two hundred cases were simulated using the EMTP software; out of these 150 cases were of system 1 and fifty cases were of system 2. About 80% of the cases were used for training the ANA and the remaining 20% were used for testing the performance of the relay.

The following types of cases were simulated.

— Fault in the transformer protection zone

- Terminal three-phase, two phase, two-phases to earth, and single-phase to earth faults
- Winding turn-to-turn and turn-to-earth faults

— External faults with and without CT saturation

— Magnetising inrush cases with different energising angles and different remnant fluxes in the core of the power transformer

Figure 100 graphically illustrates a typical response of the protection scheme for an internal single-phase to ground fault and a three-phase-to-earth fault. Figure 101 shows a typical response of the technique during magnetising inrush and Figure 102 shows a typical response of the relay to an external fault with saturation of phase-a CT on the LV side. These results show that the protection technique takes 10 to 15 ms to correctly identify the nature of the transient.

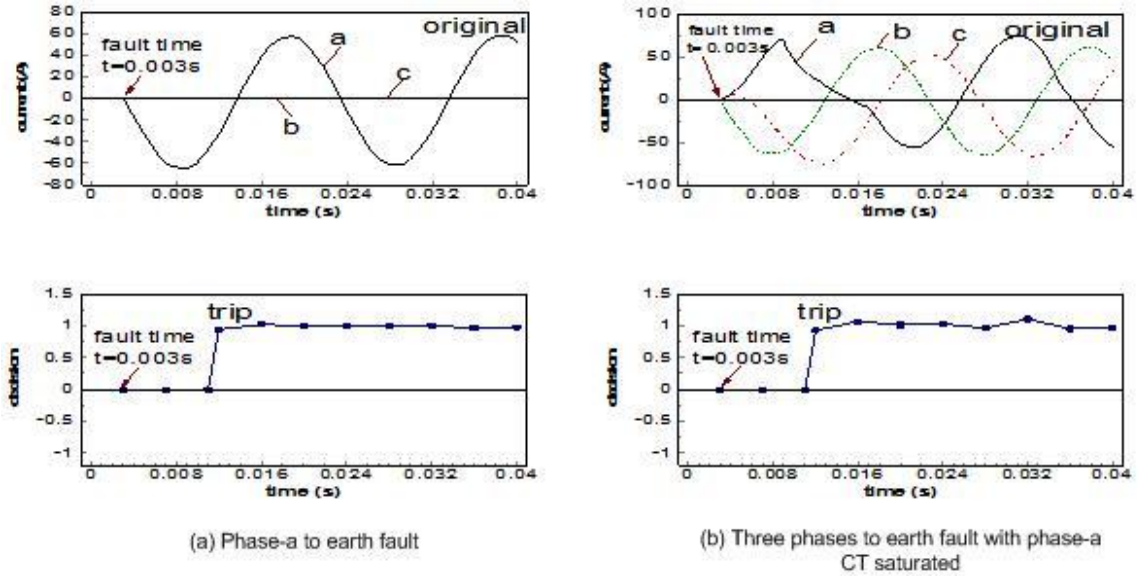

(a) Phase-a to earth fault

(b) Three phases to earth fault with phase-a CT saturated

Figure 100 — Response of relay to an internal fault

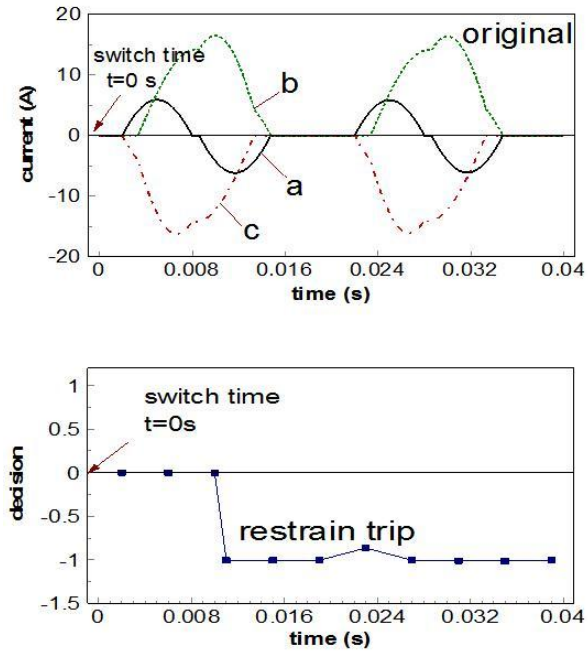

Figure 101 — Response of relay to a magnetizing inrush event

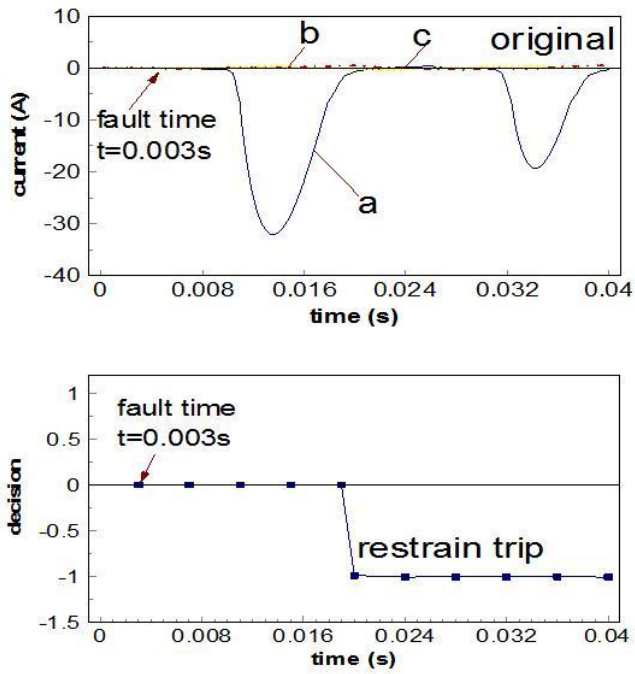

Figure 102 — Response of relay for external fault with LV side phase-a CT saturation

6.7.6 Concluding Remarks

The wavelet-transform technique described in this section extracts the time-frequency features from the current waveforms experienced during transients in power transformer systems and identifies the nature of each type of transient. The accuracy of classification by this technique is high (≈99%). This technique can be used as an attractive and effective approach for alternative protection schemes for large power transformers.

7. Annex A: Transformer failure statistics

The statistics of failures of equipment and lines are collected by the Canadian Electricity Association, Montreal, Canada, from Canadian electric power utilities and are published in the "Forced Outage Performance of Transmission Equipment" reports. The reports included forced outages of transmission equipment and components associated with transmission systems installed in Canada and operating at voltages equal to and more than 60 kV. Specifically included in the reports are outage data for the following categories.

- Transmission line analysis by subcomponent for line-related sustained forced outages
- Transmission line analysis by subcomponent for line-related transient forced outages
- Transmission line analysis by subcomponent for terminal-related forced outages
- Transmission line analysis by primary cause for line-related sustained forced outages
- Transmission line analysis by primary cause for line-related transient forced outages
- Transmission line analysis by primary cause for terminal-related forced outages
- Transformer bank analysis by voltage classification and subcomponent
- Circuit breaker analysis by voltage classification and subcomponent
- Cable analysis by subcomponent for cable-related forced outages
- Cable analysis by subcomponent for terminal-related forced outages
- Synchronous compensator analysis by voltage classification and subcomponent
- Static compensator analysis by voltage classification and subcomponent
- Shunt reactor bank analysis by voltage classification and subcomponent
- Shunt capacitor bank analysis by voltage classification and subcomponent
- Series capacitor bank analysis by voltage classification and subcomponent

The forced outages experienced from January 1, 1988 to December 31, 2002 are published in Reference B30. The overall statistics of failures of transformers reported in this report are reproduced in Tables B.1 to B.7. The information in each column of these tables is defined as follows.

Col No.	Title	Definition
1	Component Years (a)	The summation of the product of the number of units of a major component and the period duration in years, for the major component under consideration
2	Subcomponent	The constituent components of a major component and includes those external elements which are associated with it.
3	No. of Outages	The number of major component related forced outages which involved the indicated sub-component or primary cause
4	Frequency per Year	The number of outages divided by terminal years or component years
5	Total Time (h)	The sum of the forced unavailable times (in hours) of major component related forced outages involving the indicated sub-component or primary cause. Forced unavailable time is the elapsed time required to completely restore a major component to service
6	Mean Duration (h)	The total time divided by the number of outages
7	Median Duration (h)	The time at which fifty percent of the forced unavailable times are greater than this value and fifty percent are less.
8	Mean Op. Pos. (h)	The mean time that the operating position was out of service. This time differs from mean duration for those forced outages which resulted in the major component being removed from service and replaced with another.

Table 10 — Transformer bank analysis by sub-components for operating voltages from 60 kV to 109 kV

Component Years (a)	Subcomponent	No. of Outages	Frequency per Year	Total Time (h)	Mean Duration (h)	Median Duration (h)	Mean Op. Pos. (h)
3019.5	Bushings including CTs	14	0.0046	9,580	684.3	101.56	684.3
	Windings	13	0.0043	16,387	1,260.5	265.47	1,260.5
	On-load Tap Changer	81	0.0268	30,865	381.1	69.23	381.1
	Core	4	0.0013	2,531	632.7	537.27	632.7
	Leads	2	0.0007	232	115.8	115.8	115.8
	Cooling Equipment	6	0.0020	240	40.0	42.17	40.0
	Auxiliary Equipment	6	0.0020	377	62.8	25.61	62.8
	Other	42	0.0139	22,687	540.2	45.02	540.2
	All Integral Components	168	0.0556	82,898	493.4	68.78	493.4
	Control and Protection Equipment	80	0.0265	9,966	124.6	3.29	124.6
	Surge Arrester	7	0.0023	358	51.1	20.83	51.1
	Bus	13	0.0043	1,387	106.7	2.53	106.7
	Disconnect	49	0.0162	11,987	244.6	25.57	244.6
	Circuit Switcher	0					
	CT (Free Standing)	1	0.0003	1	1.1	1.13	1.1
	Potential Devices	6	0.0020	1,979	329.8	129.45	329.8
	Motor-Operated Ground Switch	7	0.0023	538	76.8	40.22	76.8
	Other	21	0.0070	4,926	234.6	4.00	234.6
	Unknown	17	0.0056	532	31.3	9.48	31.3
	All Terminal Equipment	201	0.0666	31,675	157.6	9.13	157.6

Table 11 — Transformer bank analysis by sub-components for operating voltages form 110 kV to 149 kV

Component Years (a)	Subcomponent	No. of Outages	Frequency per Year	Total Time (h)	Mean Duration (h)	Median Duration (h)	Mean Op. Pos. (h)
9,302	Bushings including CTs	93	0.0100	22,144	238.1	14.58	226.3
	Windings	31	0.0033	24,876	802.5	10.35	130.1
	On-load Tap Changer	187	0.0201	51,806	277.0	26.78	274.5
	Core	15	0.0016	493	32.9	1.27	32.9
	Leads	2	0.0002	17	8.6	8.56	8.6
	Cooling Equipment	28	0.0030	1,590	56.8	17.61	56.8
	Auxiliary Equipment	24	0.0026	6,166	256.9	18.76	256.9
	Other	162	0.0174	37,455	231.2	24.80	231.2
	All Integral Components	542	0.0583	144,547	266.7	22.82	225.3
	Control and Protection Equipment	323	0.0347	23,407	72.5	1.78	72.5
	Surge Arrester	31	0.0033	3,104	100.1	14.33	100.1
	Bus	61	0.0066	14,132	231.7	1.18	231.7
	Disconnect	157	0.0169	28,664	182.6	24.00	182.6
	Circuit Switcher	3	0.0003	71	23.6	4.85	23.6
	CT (Free Standing)	11	0.0012	1,585	144.1	4.23	144.1
	Potential Devices	27	0.0029	6,971	258.2	73.95	258.2
	Motor-Operated Ground Switch	31	0.0033	7,661	247.1	22.58	247.1
	Other	64	0.0069	1,977	30.9	2.94	30.9
	Unknown	220	0.0237	34,341	156.1	14.03	156.1
	All Terminal Equipment	928	0.0998	121,911	131.4	6.66	131.4

Table 12 — Transformer bank analysis by sub-components for operating voltages form 150 kV to 199 kV

Component Years (a)	Subcomponent	No. of Outages	Frequency Per year	Total Time (h)	Mean Duration (h)	Median Duration (h)	Mean Op. Pos. (h)
594	Bushings including CTs	18	0.0303	11,143	619.1	4.88	619.1
	Windings	2	0.0034	6,678	3,339.2	3,339.24	3,339.2
	On-load Tap Changer	28	0.0471	16,109	575.3	57.76	575.3
	Core	0					
	Leads	0					
	Cooling Equipment	6	0.0101	2,151	358.5	239.53	358.5
	Auxiliary Equipment	18	0.0303	955	53.0	12.00	53.0
	Other	16	0.0269	12,493	780.8	248.86	780.8
	All Integral Components	88	0.1481	49,529	562.8	32.00	562.8
	Control and Protection Equipment	19	0.0320	6,439	338.9	23.90	338.9
	Surge Arrester	7	0.0118	973	139.0	37.10	139.0
	Bus	4	0.0067	3	0.6	0.62	0.6
	Disconnect	26	0.0438	27,024	1,039.4	127.53	1,039.4
	Circuit Switcher	0					
	CT (Free Standing)	1	0.0017	4,626	4,625.6	4,625.63	4,625.6
	Potential Devices	8	0.0135	3,350	418.7	122.70	418.7
	Motor-Operated Ground Switch	3	0.0051	688	229.3	104.43	229.3
	Other	1	0.0017	1	0.7	0.68	0.7
	Unknown	9	0.0152	628	69.8	0.70	69.8
	All Terminal Equipment	78	0.1313		560.6	28.04	560.6

Table 13 — Transformer bank analysis by sub-components for operating voltages form 200 kV to 299 kV

Component Years (a)	Subcomponent	No. of Outages	Frequency Per year	Total Time (h)	Mean Duration (h)	Median Duration (h)	Mean Op. Pos. (h)
	Bushings including CTs	32	0.0054	6,283	196.3	13.83	196.3
	Windings	19	0.0032	23,225	1,222.4	68.97	891.0
	On-load Tap Changer	90	0.0152	25,148	279.4	12.81	279.4
	Core	5	0.0008	557	111.5	30.18	111.5
	Leads	5	0.0008	140	28.0	2.58	28.0
	Cooling Equipment	34	0.0057	2,187	64.3	3.64	64.3
	Auxiliary Equipment	35	0.0059	9,024	257.8	9.25	257.8
	Other	90	0.0152	21,719	241.3	29.14	241.3
	All Integral Components	310	0.0522	88,284	284.8	16.92	264.5
	Control and Protection Equipment	207	0.0348	8,280	40.0	2.70	40.0
	Surge Arrester	27	0.0045	1,491	55.2	23.55	55.2
	Bus	15	0.0025	282	18.8	6.13	18.8
	Disconnect	59	0.0099	14,469	245.2	31.40	245.2
	Circuit Switcher	1	0.0002	3	3.2	3.23	3.2
	CT (Free Standing)	3	0.0005	401	133.8	68.17	133.8
	Potential Devices	9	0.0015	106	11.8	8.52	11.8
	Motor-Operated Ground Switch	6	0.0010	1,059	176.4	9.03	176.4
	Other	41	0.0069	1,224	29.9	3.45	29.9
	Unknown	120	0.0202	5,990	49.9	18.23	49.9
	All Terminal Equipment	488	0.0822	33,305	68.2	9.03	68.2

Table 14 — Transformer bank analysis by sub-components for operating voltages form 300 kV to 399 kV

Component Years (a)	Subcomponent	No. of Outages	Frequency Per year	Total Time (h)	Mean Duration (h)	Median Duration (h)	Mean Op. Pos. (h)
1771.0	Bushings including CTs	10	0.0056	2,296	229.6	6.98	229.6
	Windings	13	0.0073	397	30.5	9.42	30.5
	On-load Tap Changer	42	0.0237	3,079	73.3	7.50	73.3
	Core	1	0.0006	11,399	11,399.4	11,399.42	11,399.4
	Leads	0					
	Cooling Equipment	10	0.0056	1,027	102.7	9.32	102.7
	Auxiliary Equipment	11	0.0062	143	13.0	16.67	13.0
	Other	46	0.0260	2,998	65.2	19.39	65.2
	All Integral Components	133	0.0751	21,340	160.4	13.67	160.4
	Control and Protection Equipment	28	0.0158	2,134	76.2	3.82	76.2
	Surge Arrester	8	0.0045	443	55.3	15.80	55.3
	Bus	1	0.0006	480	480.2	480.15	480.2
	Disconnect	16	0.0090	5,300	331.3	74.21	331.3
	Circuit Switcher	0					
	CT (Free Standing)	1	0.0006	7	6.6	6.63	6.6
	Potential Devices	0					
	Motor-Operated Ground Switch	0					
	Other	7	0.0040	290	41.5	13.65	41.5
	Unknown	14	0.0079	4,369	312.1	24.14	312.1
	All Terminal Equipment	75	0.0423	13,023	173.6	6.98	173.6

Table 15 — Transformer bank analysis by sub-components for operating voltages form 500 kV to 599 kV

Component Years (a)	Subcomponent	No. of Outages	Frequency Per year	Total Time (h)	Mean Duration (h)	Median Duration (h)	Mean Op. Pos. (h)
1,044.0	Bushings including CTs	4	0.0038	4,792	1,198.1	97.77	1,198.1
	Windings	1	0.0010	1,007	1,007.1	1,007.05	1,007.1
	On-load Tap Changer	3	0.0029	32	10.7	4.27	10.7
	Core	0					
	Leads	0					
	Cooling Equipment	5	0.0048	555	111.1	5.30	111.1
	Auxiliary Equipment	2	0.0019	7	3.6	3.60	3.6
	Other	6	0.0057	7,552	1,258.7	48.95	1,258.7
	All Integral Components	21	0.0201	13,946	664.1	30.20	664.1
	Control and Protection Equipment	14	0.0134	179	12.8	2.17	12.8
	Surge Arrester	3	0.0029	269	89.6	45.10	89.6
	Bus	2	0.0019	57	28.5	28.50	28.5
	Disconnect	6	0.0057	387	64.5	21.05	64.5
	Circuit Switcher	0					
	CT (Free Standing)	0					
	Potential Devices	3	0.0029	142	47.3	52.45	47.3
	Motor-Operated Ground Switch	0					
	Other	5	0.0048	51	10.3	1.17	10.3
	Unknown	1	0.0010	31	30.6	30.55	30.6
	All Terminal Equipment	34	0.0326	1,116	32.8	6.59	32.8

Table 16 — Transformer bank analysis by sub-components for operating voltages form 600 kV to 799 kV

Component Years (a)	Subcomponent	No. of Outages	Frequency Per year	Total Time (h)	Mean Duration (h)	Median Duration (h)	Mean Op. Pos. (h)
2,539.0	Bushings including CTs	6	0.0024	3,801	633.5	115.76	633.5
	Windings	6	0.0024	920	153.3	20.45	153.3
	On-load Tap Changer	11	0.0043	888	80.7	65.08	80.7
	Core	2	0.0008	252	125.9	125.86	125.9
	Leads	0					
	Cooling Equipment	11	0.0043	736	66.9	32.00	66.9
	Auxiliary Equipment	11	0.0043	746	67.9	30.52	67.9
	Other	25	0.0098	14,788	591.5	16.37	591.5
	All Integral Components	72	0.0284	22,131	307.4	25.02	307.4
	Control and Protection Equipment	37	0.0146	932	25.2	4.52	25.2
	Surge Arrester	6	0.0024	1,626	271.0	71.48	271.0
	Bus	2	0.0008	165	82.4	82.38	82.4
	Disconnect	17	0.0067	1,647	96.9	13.18	96.9
	Circuit Switcher	0					
	CT (Free Standing)	0					
	Potential Devices	0					
	Motor-Operated Ground Switch	2	0.0008	712	355.8	355.82	355.8
	Other	3	0.0012	39	13.0	8.47	13.0
	Unknown	6	0.0024	133	22.1	3.65	22.1
	All Terminal Equipment	73	0.0288	5,253	72.0	8.48	72.0

8. Annex B – Requirements on current transformers

The current transformers have an impact on the behaviour of protection systems, especially on differential protection. As shown in Section 3.1.1, CT saturation can result in an over-reach during external faults and under-reach or delayed tripping during internal faults. Some algorithmic measures are taken in differential protection systems to avoid unwanted operations.

A summary of issues that should be considered when selecting of CTs is provided in Table 17.

Table 17 — Comments on CT requirements

CT requirements	Remarks
Primary Current	The primary current of the CT is chosen considering the rated current of the transformer. Selection: I_P of CT > $I_{N,Tr}$.
Secondary Current	Rated secondary current of CTs is normally 5A or 1A. The 1A type CT has the advantage, that there can be connected a higher burden; $R_{N,CT} = S_N/I^2_{S,N2}$
Type of CT	Closed iron core CTs can be used for most applications. This means that P type or class C (IEEE) would suffice. TPY type CTs are used sometimes at large generator units. The CTs on all sides of a transformer should have the same transient response.
Accuracy at I_N	This selection is a question of sensitivity. It is desirable to use 5P type (1% at I_N) CTs. 10P types (3% at I_N) may be used on smaller transformers.
Accuracy limit factor or knee point voltage	CT transients have an impact on the performance of protection systems. According to the IEC design requirements, the accuracy limit factor must be calculated (see the following brief description). Another approach is to select the CT using the knee point voltage considerations.

8.1 External fault

The worst case situation is a 3phase short circuit beyond the transformer. An ideal source can be assumed and the short circuit impedance of the transformer determines this current.

$$I_{SC} = \frac{S_N}{\sqrt{3}\,U_N} \times \frac{100}{Z_{SC}} \tag{50}$$

where

Z_{SC} is the short circuit impedance in percentage
S_N is the apparent power of the transformer
U_N is the rated voltage of transformer

The actual limiting factor, *ALF'*, of the CT should than calculate by using the following equation.

$$ALF' = K_{TD} \frac{I_{SC}}{I_{P,CT}} \tag{51}$$

where,

K_{TD} is the transient factor that coffers with saturation free time
IP,Ct is the primary current rating of the CT

The definition of the transient factor is given in standard IEC60044-6 and is shown in Equation 52. The required factor is mainly determined by the saturation free time tm. This time or the transient factor must be given by the relay manufacturer.

$$K_{TD}(t) = \frac{\omega T_P T_S}{T_P - T_S}\left(e^{-\frac{t_m}{T_P}} - e^{-\frac{t_m}{T_S}}\right) + 1 \tag{52}$$

where,

T_P time constant of the fault current (e.g. 100 ms)
T_S time constant of the current transformer (e.g. 5s for P type)
T saturation free time (e.g. close or more of a ¼ cycle)

In most cases, a transient factor K_{TD} of 4 is required by the manufacturers.

The necessary nominal accuracy limit factor, *ALF*, is given by Equation 53. The following information is used in this equation.

- rated power of the CT, $S_{N,CT} \rightarrow$ rated burden should be calculated ($R_{B,N} = S_{N,B} / I^2_{N,S}$)
- internal resistance of the CT (R_i)
- resistance of the burden on the CT (R_B)

$$ALF = ALF' \times \frac{R_B + R_i}{R_{B,N} + R_i} \tag{53}$$

where,

$$R_B = 0.0175 \frac{2 \times L}{A} + R_R \tag{54}$$

L is the length of the cable connected to the CT
A is the cross section of the cable
R_R is the relay burden

8.2 Internal fault

The worst case situation is the fault beyond the current transformer; the current depends on the source impedance and can be relatively high. Transformer protection system should be able to detect it in a few milliseconds. The required actual accuracy limiting factor ALF'_{INT} is as follows.

$$ALF'_{INT} = K_{TF} \times \frac{1.1 \times S_{SC}}{\sqrt{3}\, U_N} \times \frac{1}{I_{P,CT}} \tag{55}$$

where,

S_{SC} is the short circuit power from the system sources
K_{TF} is the fast transient factor for fault detection < ¼ cycle ($K_{TF} < 1$; e.g. 0.75)

As shown in [46], the dc offset is not so important for fault detection in less than ¼ cycle. In most cases, the short circuit power from the system sources is not known; in such cases the

calculation is only done for an external fault. For an internal fault, it is assumed that the CT delivers enough current for operating the high set element. With heavy saturation, the current transformers behave like a current divider. Simulations given in Section 8.3 show that the resulting secondary current is high enough (see example).

8.3 Accuracy-limit factor calculation

Figure 103 gives the technical data used in this example. The accuracy-limit factor is calculated for the CT on the high-voltage side only.

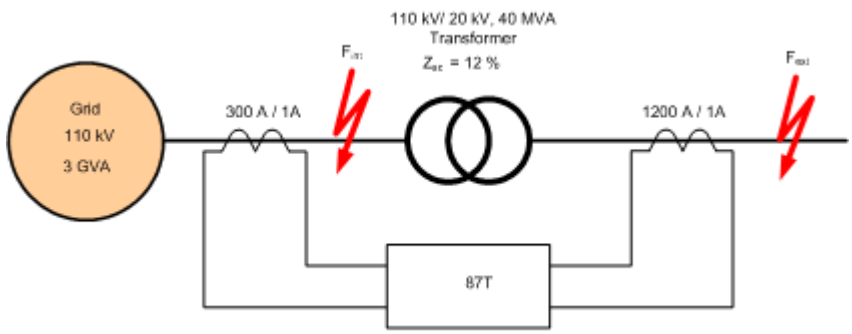

Figure 103 — Circuit and data used for calculating accuracy-limit factor

Additional Data:

- Rated transformer current is [40×1000 / (110√3) = 210 A]
- CT: P-type, 300 A/ 1A ratio
- $S_{N,CT}$ = 10 VA
- $S_{i,CT}$ = 2 VA (R_i = 2Ω)
- L = 100 m
- A = 2.5 mm^2
- S_R = 0.05 VA (R_R = 0.05Ω)

8.3.1 Calculations for the external fault

$$I_{SC} = \frac{40 \times 1000}{\sqrt{3} \times 110} \times \frac{100}{12} = 1749\ A$$

$$ALF' = 4 \times \frac{1749}{300} = 23.32$$

$$R_B = 0.0175 \times \frac{2 \times 100}{2.5} + 0.05$$

$$= 1.4\ \Omega$$

$$ALF = 23.32 \times \frac{1.4 + 2.0}{10 + 2}$$

$$\approx 7$$

The requirement from the external fault condition is an accuracy limit factor of 7.

8.3.2 Calculations for the internal fault

$$ALF'_{INT} = 0.75 \times \frac{1.1 \times 3 \times 10^9}{\sqrt{3} \times 110 \times 10^3} \times \frac{1}{300}$$

$$= 43.3$$

$$ALF = 43.3 \; \frac{1.4 + 2.0}{10 + 2.0}$$

$$\approx \; 13$$

The requirement from the internal fault is an accuracy limit factor of 13.

8.4 Conclusion

Internal fault considerations dictate a higher rating for the CTs. A value of 15 may be used for accuracy limit ranges of CTs. A 5 P type (magnitude error at I_N of 1%) may be selected for accuracy reasons.

Note: The calculations show that the impact of internal burden of the CT is substantial and should not be neglected. The value of the internal resistance of the CT should be obtained from the CT manufacturer.

The finally selected CT is: 5P15 10VA

8.5 Discussion

A CT of rating 5P10 10VA would be sufficient if only the external fault were considered. The fault current and CT secondary current are shown in Figure 104 if 5P10 10VA CTs were used. The short circuit current in this example as shown in is 17.32 kA. The fault current in Figure 105 is 35 kA, a little bit more than twice the fault current in Figure 104.

In both cases the CTs deliver in the initial 4 ms unsaturated current. The CT then goes into saturation and becomes a current divider. The additional indication of saturation is that there is a 90° phase shift in the current. In both cases the current of the CT is high enough to operate the differential protection system.

These simulations have shown that 5P10-Type CTs would be of adequate size for this application.

8.6 Summary:

The dimensioning of the CTs for the calculation of the external fault only is an acceptable way.

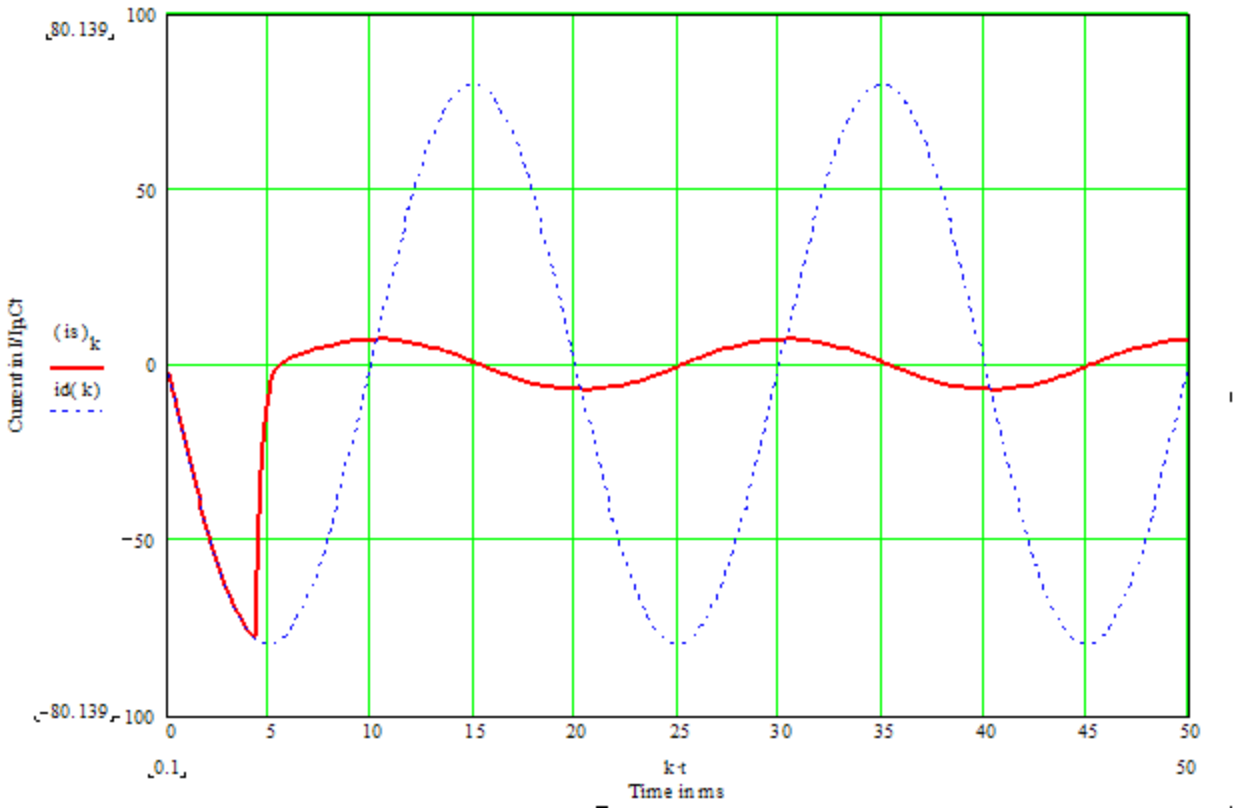

Figure 104 — Simulation result with a fault current of 17.32 kA (57.73 times of primary CT current); CT: 5P10 10VA

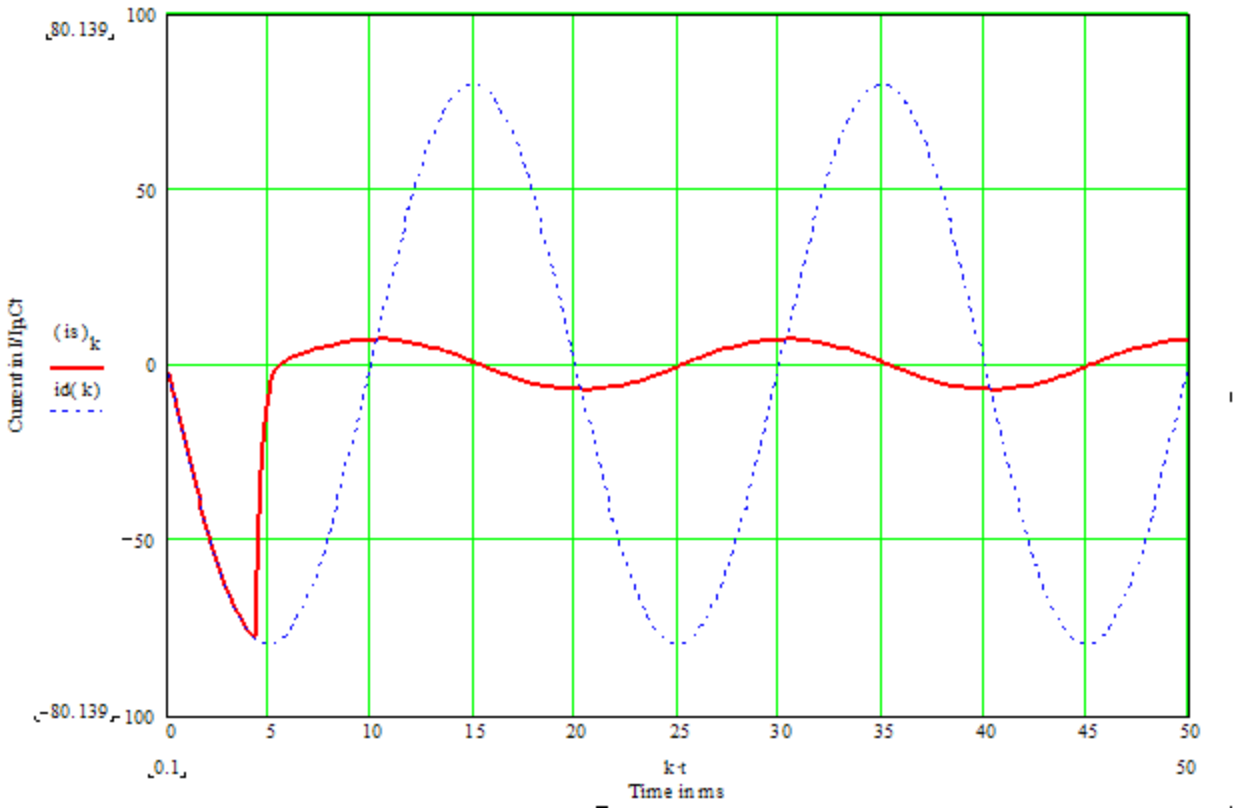

Figure 105 — Simulation result with a fault current of 35 kA

(116.67 times of primary CT current; CT): 5P10 10VA

9. Annex C – Relay setting examples

Three examples of setting systems for protecting transformers are presented in this Annex. The first example deals with setting differential relays for step up transformers installed at generating stations. Issues that are relevant for protecting transformers using electromechanical relays are first presented. Settings of other relays provided to protect such a transformer are not described in this example. The second example deals with the setting of a numerical relay and an electromechanical relay for protecting a network transformer. Finally, the third example demonstrates the procedure for setting a combination of electromechanical and numerical relays for protecting a distribution transformer. All figures are drawn assuming that the relays used to protect transformers are of the electromechanical type. In the case of numerical relays, all CTs are connected in wye configuration and the phase shift and ratio are matched in the relay.

Only general information on setting relays is provided in this Annex for use by protection engineers and technologists.

9.1 Electromechanical relays for protecting a step up transformer

Selection of CTs is addressed first; this is followed by setting of relays. The particulars of the transformer and other pertinent information are as follows.

- A 110 MVA generator rated at 13.8 kV is connected to a 230 kV network by a 13.8 kV / 230 kV step-up transformer.
- The low voltage (13.8 kV) winding of the step up transformer is connected in delta configuration and the high voltage (230 kV) winding is connected in wye configuration. The neutral of the wye winding is solidly grounded.
- Voltage regulation is provided by taps on the high voltage winding of the transformer; the tap changer provides voltage in the range from 205 kV to 255 kV.
- The transformer is protected by a differential relay. Backup protection of the transformer is provided by a Buchholz relay.
- This example is in two parts. The first part consists of setting an electromechanical relay to protect the transformer. The second part consists of setting numerical relays for protecting transformer

The first issue considered in this example is the selection of CTs that provide information on the currents in the low and high voltage sides of the transformer to the relay.

9.1.1 CT ratio selection for electromechanical relays

9.1.1.1 Phase shift correction:

There is a phase shift between the voltages (and currents) of the low-voltage and high-voltage sides of a delta-wye transformer. More details of the phase shift are given in 12 Annex F: Vector groups and transformer configurations. The CTs provided on the delta side of the transformer are connected in wye and CTs provided on the wye side are connected in delta to compensate for the phase shift in the transformer when electromechanical differential relays are used. Figure 106 shows a typically arrangement of these connections.

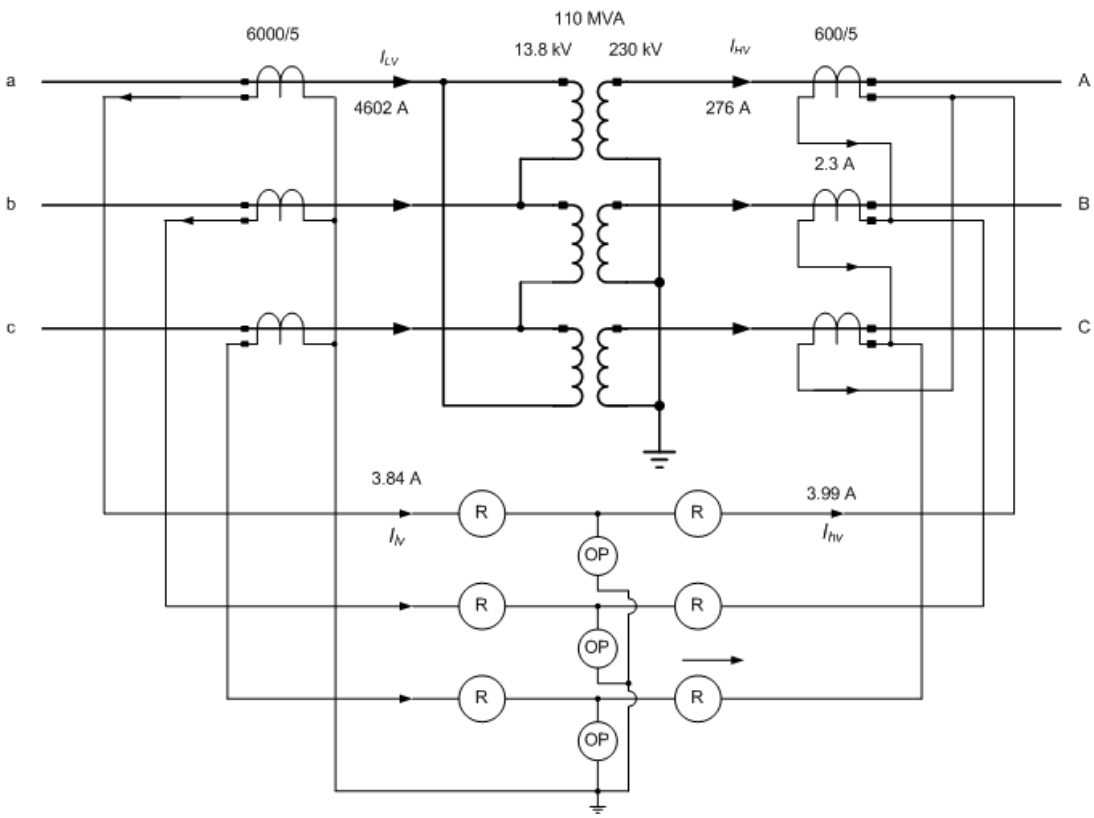

Figure 106 — CT connections with the electromechanical differential relay

The currents in the primary and secondary windings of the transformer are in phase with each other. The phase-a current, I_a, on the delta side is a phasor difference of I_A and I_C as shown in Figure 107. It is shown in this figure that I_A leads I_a by 30°; similarly, I_B leads I_b by 30° and I_C lead I_c by 30°.

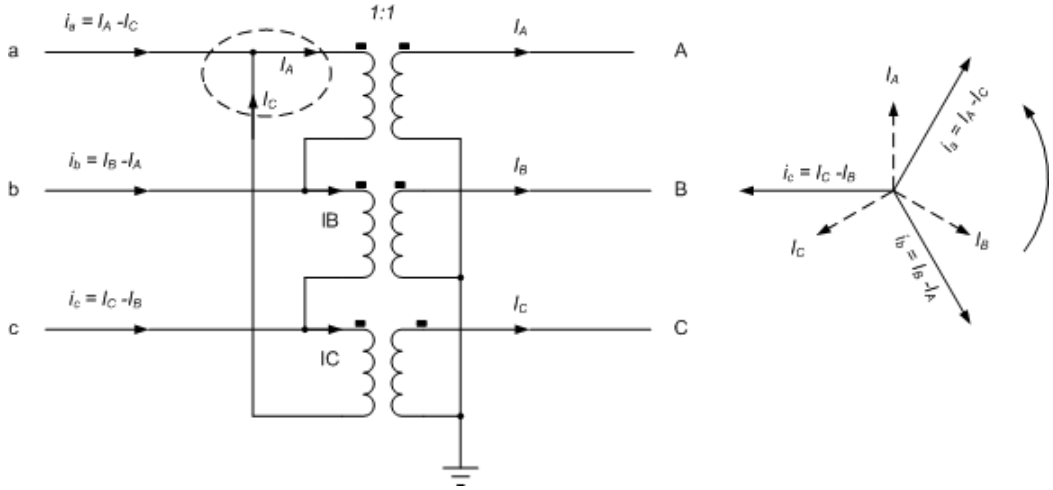

Figure 107 — Phase relationship between current in phase-A and phase-a

9.1.1.2 CT selections for HV and LV sides

The rated currents of the transformer high voltage side, I_{HV} and the rated current of the transformer on the low voltage side, I_{LV} are as follows.

$$I_{HV} = 110(\text{MVA}) \times 1{,}000 \div \left[230(\text{kV}) \times \sqrt{3}\right] = 276 \text{ A}$$

$$I_{LV} = 110(\text{MVA}) \times 1{,}000 \div \left[13.8(\text{kV}) \times \sqrt{3}\right] = 4{,}602 \text{ A}$$

Many utilities select the rating of the CT primary winding that is close to 125 % of the rated primary current of the transformer. The rating of the CT primary, therefore, works out to

$$4{,}602 \times 1.25 = 5{,}753 \text{ A}.$$

This is not a standard rating for CT primary windings. The next appropriate higher rating is 6,000 A. Therefore select 6,000/1 A CTs. (It is assumed that relays rated at 1 A nominal current are used.)

The current, I_{LV}, out of the secondary windings of the CTs provided on the low voltage side when the transformer is carrying its rated current is

$$4{,}602 \times 1 \div 6{,}000 = 0.767 \text{ A}.$$

This current flows into the relay from the low voltage side of the transformer.

The current, I_{HV}, provided to the relay by the CTs on the high voltage side of the transformer ideally should be the same as the current provided by the CTs selected for the low voltage side of the transformer. Because the CTs on the high-voltage side of the transformer are connected in delta configuration, the current out of the CTs ideally should be

$$0.767 \div \sqrt{3} = 0.443 \text{ A}.$$

The rated current of the transformer on the high-voltage side is 276 A. Because the nominal secondary rating of the CTs is 1 A, the ideal primary rating of CTs provided on the high voltage side of the transformer should be

$$(276 \div 0.443) \times 1 = 623 \text{ A}.$$

Select 600/1 A CT ratio of for HV side because 625/1 A is not a standard CT rating.

There is a current mismatch because the ratings of the selected CTs are not equal to the ideal ratings. Current provided by the high side CTs when the transformer is supplying rated current will be

$$(276 \times 1 \div 600) \times \sqrt{3} = 0.797 \text{ A}.$$

The percentage error due to CT mismatch will be

$$\left[(0.797 - 0.767) \div 0.767\right] \times 100 = 3.9\%$$

9.1.2 Alternative approach for phase shift correction

Another approach for phase shift correction is to use wye-wye connected CTs on the primary and secondary sides of the transformer. The phase shift correction is now achieved by connecting the high-side CTs to wye-delta connected auxiliary CTs. This approach has the advantage of reducing the burden on the high-side CTs. The selection of CT ratios for this case is described in Section 9.1.2.1. This procedure is also valid if numerical relays are used and the CTs provided on both sides of the transformer are connected in wye configuration.

9.1.2.1 Selecting ratios for CTs on the HV and LV sides

As discussed earlier, CTs of ratio 6000/1 A are selected for the low-voltage of the transformer.

Because the CTs on the high voltage side of the transformer are also wye connected, the rating of the primary windings of these CTs could be

$$(276 \times 125 \div 100) = 345 \text{ A} .$$

This is not a standard rating; therefore, select the next higher standard rating of 400A for the primary winding of the CTs. Hence, select 400/1 A CTs for use on the high voltage side of the transformer.

9.1.2.2 Ratios of auxiliary CTs

The rated current of the high-voltage side of the transformer is 276 A. The current out of each high-voltage side CT would be

$$276 \times 1 \div 400 = 0.690 \text{ A}$$

The current out of the delta windings of the auxiliary CTs, if their turns ratio was 1:1, would be

$$0.690 \times \sqrt{3} = 1.195 \text{ A}$$

The current provided by the CTs on the low-voltage side is 0.767 A. The ratio of the wye-delta windings of the auxiliary CTs should, therefore, be 1,000 to

$$1000 \times 1.195 \div 0.767 = 1558$$

9.1.3 Minimum pickup setting

The minimum pickup of the relay should be set at a level greater than the sum of the steady state exciting current of the transformer under normal load conditions and the measurement error that is likely to occur at low load levels. If a level of 20% of nominal rating of the CT is selected for this purpose, the minimum pickup current would be

$$(1 \times 20 \div 100) = 0.2 \text{ A} .$$

9.1.4 Percentage slopes setting

Assume that the relay protecting the transformer has a provision for using two slopes; one for lower levels of operating currents and the other for higher levels of operating currents. The following factors are usually considered for determining the maximum unbalance for determining slope 1.

— The first factor is the current due to CT mismatch. In this example, it has already been calculated as ≈ 4%.

— The second factor that should be considered is the errors due to the accuracy of the CTs and the accuracy of the auxiliary CTs, if they are used. A typical value used for this purpose is 5%.

— The third factor that should be considered is the error because the transformer may be operating at off-nominal taps for voltage regulation. Considering that the minimum and maximum voltages at which the transformer could be operating are 205 kV and 255 kV. These voltages are approximately 11% off the rated voltage. The nominal current could

be 11% more or less if the transformer operates at the end taps. This means that the maximum differential current due to the operation of the transformer at off-nominal tap, could be 11 %.

Total error that could be experienced at full load operation of the transformer is the sum of the errors calculated above. This works out to

$$4+5+11 \approx 20\%.$$

Slope 1 could be set at 30%; this leaves sufficient margin above the calculated value of 20%.

Slope 2 is effective beyond the knee point of the operating characteristic of the transformer. This slope becomes important when through faults occur and the restraint is quite high. A 70 % setting for this slope is reasonable.

The restraint current at which the slope 2 takes over from slope 1 is typically 3 pu.

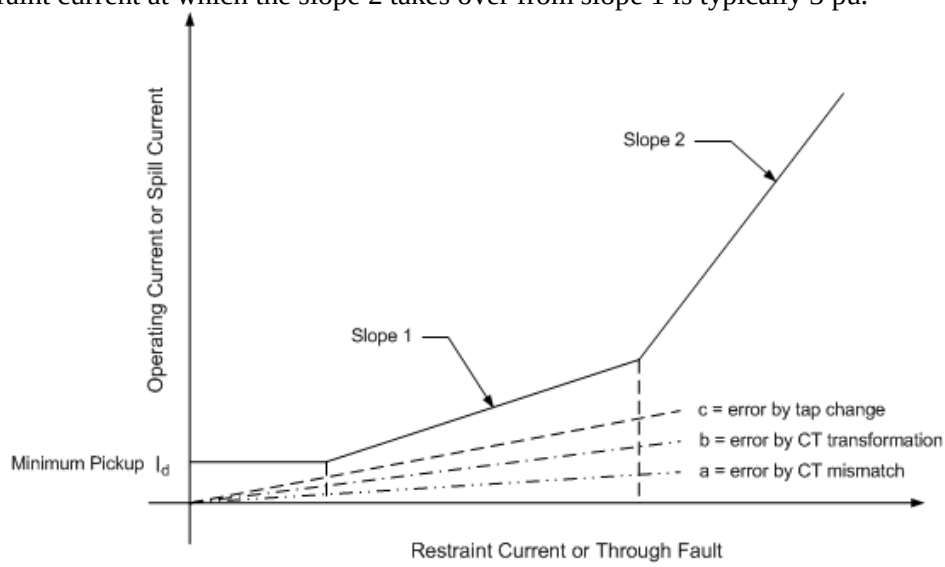

Figure 108 — Percentage differential slopes and differential currents due to various errors for the differential relay

9.2 Setting relays for a network autotransformer

The information provided in this example is for setting numerical transformer protection relays for a network transformer. Consider the following scenario of a network substation.

- The voltage ratings of two networks are 345 and 118 kV.
- A 345/118 kV autotransformer with 34.5 kV delta connected tertiary winding is provided to connect the two networks.
- The transformer is protected by an electromechanical differential relay. Backup protection is provided by a sudden pressure relay.
- CTs used in this example provide 5 A nominal secondary current to relays that are rated for 5 A nominal current
- The relay has discrete taps ranging from 2.9 to 8.7 and these taps can be used to match currents from the windings during normal load.

— Total current into the relay during an internal fault should not exceed 220 A for one second.

— The substation is upgraded and a new autotransformer of 675 MVA replaces the original transformer. The self cooled rating of this transformer is 400 MVA.

— The transformer has wye connected primary and secondary windings and a delta connected tertiary winding that is connected to a 50 MVAr reactor. The phase angle of delta winding with reference to the 345 kV winding is -30°.

— The original electromechanical differential relay is used to protect the new transformer.

— The original CTs continue to provide currents to the electromechanical differential relay.

— A numerical transformer differential relay is added for providing redundant protection. Backup protection is provided by a Buchholz relay that replaced the sudden pressure relay provided on the older transformer.

— A new set of CTs are added to the substation for providing input to the numerical differential relay.

— Three CTs are buried in the tertiary winding (one in each phase of the delta winding). The secondary windings of these CTs are connected in parallel and the resulting output is provided to a backup overcurrent relay.

— Two lockout relays are provided; one relay is tripped by the electromechanical differential relay and the overcurrent relay, and the other lockout relay is tripped by the numerical relay and the Buchholz relay.

9.2.1 Transformer Data

The data of the transformer being considered in this example is given in Table 18. A single line diagram, showing the transformer, CTs and relays is given in Figure 109

Table 18 — Data of the 675 MVA transformer

	Winding 1	**Winding 2**	**Winding 3**
Voltage rating (kV)	345	118	34.5
Connection	Grounded wye	Grounded wye	Delta
Base (ONAN) rating (MVA)	400	400	80
Maximum rating (MVA)	675	675	80
Tap changer	No-load; ±5% of 345 kV	None	None
Transformer current at base MVA (A)	669	1957	1339
Transformer current at maximum rated MVA (A)	1130	3303	1339
Primary protection	Microprocessor based multifunction relay		
Secondary protection	Electromechanical relay (87) with CT ratio adjusting taps		

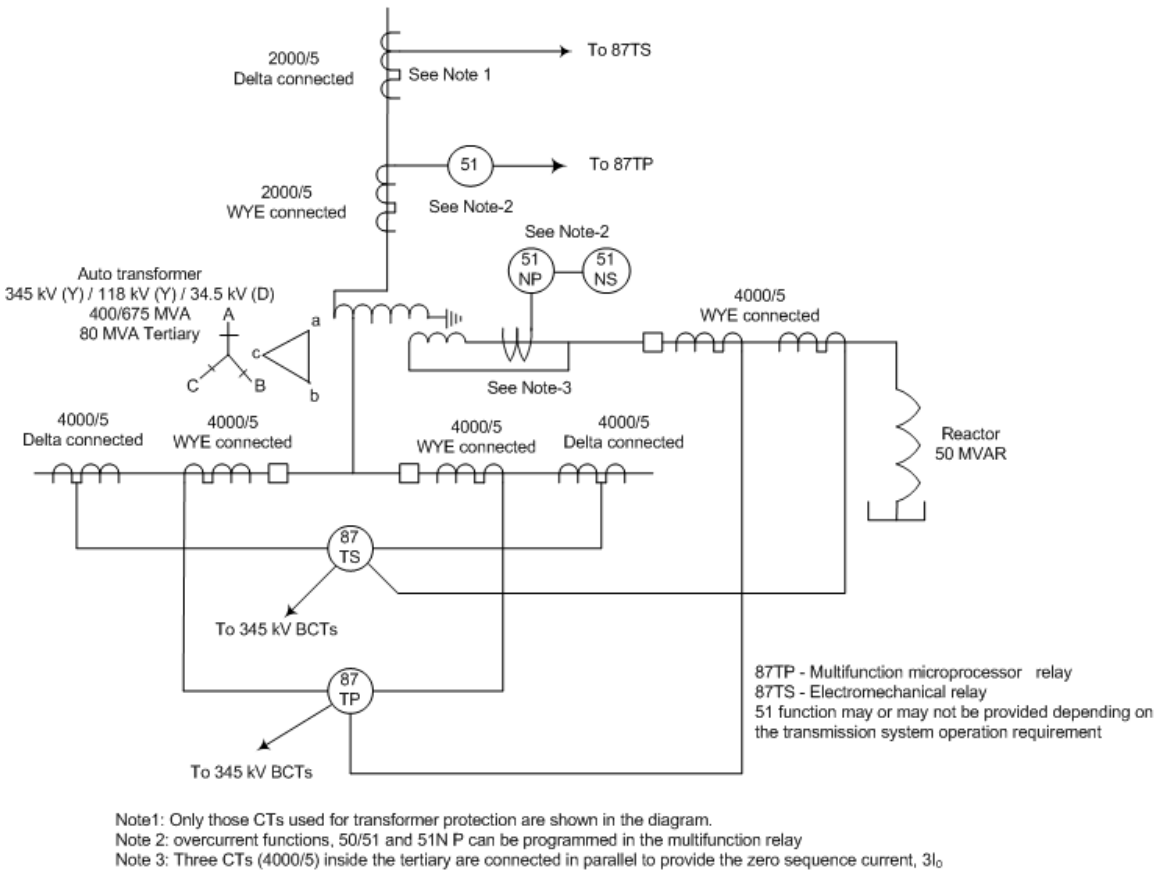

Figure 109 — Protection system for a 675 MVA, 345/118 kV autotransformer with delta connected tertiary winding

9.2.2 Electromechanical differential relay setting (87TS)

The ratios of CTs used for the electromechanical differential relay, the connections of the CTs, currents provided by the CTs and the relay currents are listed in Table 19.

Table 19 — CT and relay data for electromechanical differential relay

	Winding 1	**Winding 2**	**Winding 3**
CT Ratio	2000/5	4000/5	4000/5
CT connection	Delta	Delta	Wye
CT secondary current at 400 MVA (A)	1.67	2.45	*8.36
CT secondary current at 675 MVA (A)	2.82	4.13	*14.05
Relay current @ 400 MVA (A)	2.89	4.24	*8.36
Relay current @ 675 MVA (A)	4.89	7.15	*14.05 [1.67A@ 80 MVA]

*Though the tertiary winding is rated for 80 MVA, relay currents are calculated at MVA rating of the higher rated windings, to check for relay stability for external faults.

9.2.2.1 Criteria for CT ratio selection and relay tap setting

It is a practice in many utilities to ensure that the following ratings are not exceeded.

— CT secondary current at Maximum Transformer MVA (675 MVA in this example) does not exceed the thermal rating of the CT secondary winding.

— The relay current at Maximum Transformer MVA should not exceed the continuous thermal rating of the relay.

It is also desirable that:

— The CT ratios are selected such that the relay currents under maximum internal fault conditions do not exceed the relay short time thermal ratings to prevent damage.

— The relay taps are chosen such that the error due to mismatch is less than 5 percent.

CAUTION

If a transformer is loaded beyond the nameplate rating due to an emergency, the CT or relay, or both are likely to be damaged if their thermal ratings are exceeded.

The relay current at self-cooled rating of 400 MVA of this transformer should not exceed the TAP value. This is to prevent the operation of the unrestrained high set unit (typically 8 times the tap value) due to inrush current.

The ratios of currents from CTs (as a fraction of the current from winding 1), selected tap settings and ratios of tap settings (as a fraction of the tap on winding 1) are listed in Table 20. The percentage errors and total mismatch are also listed in this table.

Table 20 — Current ratios, relay taps, tap ratios and mismatch errors

	Winding 1	**Winding 2**	**Winding 3**
Selected relay tap	2.9	4.2	8.7
Current ratio	1	1.46	2.89
Tap ratio	1	1.45	3.0
Percentage error		$\frac{(1.46-1.45)}{1.45}\times 100 = 0.7\%$	$\left\lvert\frac{(2.89-3.0)}{3.0}\right\rvert\times 100 = 4\%$
Mismatch error	Less than 5%		

9.2.2.2 Minimum pick up

In many electromechanical relays, the user cannot set the minimum pick up current of the relay. It is a fixed percentage of the tap setting and it varies with the manufacturer. Typical values are 30 % and 35 %.

9.2.2.3 Harmonic Blocking/ Restraint setting

This is not a user-defined setting. The percentage varies with the manufacturer –value of one manufacturer's relay is 20 % where as the value of another manufacturer's relay is 15%.

9.2.2.4 High set unit current setting

The setting is typically eight times the tap value and it not a user-defined setting.

9.2.2.5 Other Settings

Mismatch due to no-load taps is 5 % and the maximum ratio error mismatch is 4 %. The total mismatch error is, therefore, 9 % approximately.

The available slope settings are 15, 25 and 40 percent. Slope setting of 25 % could be selected.

9.2.2.6 Verification of the thermal rating of the relay coils

Consider that the fault currents at this location are as listed in Table 21. Currents for faults on the 34.5 kV side are less than the currents for faults on the 118 kV side.

Table 21 — Currents for faults in the transformer zone

Fault		Fault currents (A) from		Currents (A) to electromechanical relay from		
Type	**Location**	**345 kV side**	**118 kV side**	**345 kV side**	**118 kV side**	**Total**
3 Phase	345 kV	26,500	5,500	115	12	127
3 Phase	118 kV	5,530	34,169	24	74	98

Total current in the electromechanical relay is less than 220A, the maximum allowed in this case.

Relay currents due to single-phase to ground and other shunt faults should also be checked to verify that the currents in the relay will not exceed the rating of the relay. In this example it is assumed that relay currents during other types of shunt faults are less than those listed in Table 21

9.2.2.7 CT burden verification

The burden on the CTs should be checked, as described in IEEE Std C37.110™, Guide for Application of Current Transformers Used for Protective Relaying Purposes to ascertain the CTs do not saturate for faults in the transformer zone and in the networks it is connected to.

9.2.2.8 Transformer overload capability

Continuous current rating of the relay coils vary with the manufacturer. One of them specifies the continuous rating as 2 times the tap setting, whereas another manufacturer has a minimum rating of 8A with a maximum varying with the tap setting. Consider that the relay used in this case is for the first type.

The tap setting on the 345 kV side is 2.9. This is $\frac{2.89}{4.89} \times 100 = 59\%$ of current at 675 MVA.

The tap setting on the 118 kV side is 4.2. This is $\frac{4.24}{7.15} \times 100 = 59\%$ of current at 675 MVA

The tap setting on the 34.5 kV side is 8.7. This is 167% of current at 80 MVA

The transformer can be overloaded up to 118 % (2×59) of 675 MVA rating on 345 and 118 kV windings without exceeding the thermal limit of the relay. If the transformer needs to be loaded beyond 118% of its rating, CTs of higher ratio should be used and then auxiliary CTs should be used to match the working of the differential relay. This would allow higher tap settings to be used on the 345 kV and 118 kV sides.

If the second type of relay is used, the 2.9 tap setting has 8A continuous rating and 4.2 A tap has a rating of 13A. The transformer could be loaded up to 160 % without exceeding the continuous rating of the relay inputs.

9.2.3 Microprocessor Relay settings, 87TP

All CTs that are connected to the relay are connected in wye configuration.

Most of the modern relays need the following settings: To make this document non-vendor specific, all settings available with each vendor are not covered. Please refer to the manufacturer's manuals for additional settings.

As already stated earlier in this annex, the phase angle of the delta winding with reference to the 345 kV winding is -30°. This setting may not be needed for some numerical relays. The ratios of CTs, CT connections, and tap settings are listed in Table 22.

Table 22 — Ratios of CTs, connections of CTs and tap settings of numerical relay

	Winding 1	**Winding 2**	**Winding 3**
CT Ratio (A)	2000/5	4000/5	4000/5
CT connection	wye	wye	wye
Tap setting	2.82	4.11	14.05

Most of the relays can automatically calculate the TAP setting based the values entered for the rated voltage and rated MVA. TAP setting is the secondary current at the rated MVA, usually the top rated MVA.

Some relays require internal compensation setting where as others automatically determine the setting based on the winding configuration and the phase relationship of the winding with respect to the winding 1, the 345 kV connections in this example. However, the compensation setting that eliminates zero sequence current should be chosen for grounded wye windings to avoid incorrect operation for single line to ground faults external to the transformer.

9.2.3.1 Minimum Pick Up

The minimum pick up is user selectable. A setting of 0.2 times the nominal current (0.2×5=1 A in this case) may be selected.

9.2.3.2 Slope of the relay characteristic

The slope is user selectable. Slope 1 of 25% and slope 2 of 50 % may be selected for this application. The switchover from slope 1 to slope 2 is also user selectable. Switchover at 3 times the tap setting may be selected for this application.

9.2.3.3 Harmonic blocking

Harmonic blocking is also user selectable. A setting of 15 % may be selected. Manufacturer's advice is usually invaluable in this respect.

9.2.3.4 High set overcurrent protection

A setting of 8 times the tap value may be used. If the transformer is connected to a weak system, a lower setting may be used.

9.2.3.5 Ground overcurrent settings

All CTs inside the tertiary are connected in parallel configuration to provide $3I_0$ current. The pickup of the 51N relay should be set higher than the zero sequence current expected due to the unbalance load currents. A typical setting of 1A may be used. The time current characteristics can be selected depending on the user's standards. It may be set as IEEE moderately inverse curve defined in IEEE Std C37.112™, Standard Inverse-Time Characteristic Equations for Overcurrent Relays.

The time dial is set to coordinate with other relays on the 345 kV and 118 kV systems. In this example, the time dial may be set to provide an operating time of at least 45 cycles for maximum current contribution for a single line to ground fault either on the 345 kV or 118 kV systems.

9.2.3.6 Instantaneous and inverse time over current relay settings

When instantaneous overcurrent function is used, it is set at 200% of the maximum contribution of the fault current on the low voltage faults. This pick up value can vary.

The pickup of the time overcurrent element, if used, is set above the maximum allowable load beyond the transformer top rating. In this example it is set to 200% of the top rating. Time dial is coordinated with other relays on the 345 kV and 118 kV systems. Moderately inverse characteristic is selected for this application.

Note: The minimum pick up setting on the time overcurrent may be stipulated by utility, regional or national guidelines.

9.3 Relay settings for a distribution transformer

The information provided in this annex is for setting relays for protecting a distribution transformer. Consider the following scenario of a network substation shown in Figure 110.

- A 70 MVA transformer steps down 118 kV to 14.4 kV for distribution of energy to customers.
- The primary winding of the transformer is connected in delta configuration.
- The secondary winding of the transformer is connected in wye configuration with neutral connected solidly to ground.
- The CTs used in this example are rated 5 A nominal secondary current.
- The CTs are connected to relays that are rated 5 A nominal current.
- A differential relay with harmonic restraint / harmonic blocking (87) is provided to protect the transformer.
- An instantaneous overcurrent / inverse time delay overcurrent relay (50/51) is provided for backup protection.
- A restricted earth fault protection relay (87G) is provided for sensitive ground fault protection on the wye winding of the transformer.
- An inverse time overcurrent relay (51N) is provided for protection from earth fault.

— Two relays are used for providing 50/51 and 51N functions.

— A multifunction numerical relay is used for other protection functions.

— Two Lockout relays are used, the first one is tripped by the differential relay and the second is tripped by the gas detection relay (Sudden pressure/ Buchholz) and overcurrent relays.

Another possible alternative to this protection configuration is to use two multifunction relays and activate all the functions in each relay; this would provide full redundancy. The actual decision in this respect depends on the practice of the utility; the utility practices usually evolve from their past experiences.

9.3.1 Transformer data

The transformer data used for setting relays is listed in Table 23

Table 23 — Distribution transformer data

	Winding 1	**Winding 2**
Voltage Rating (kV)	118	14.4
Winding connection	delta	wye-grounded
Phase shift	0	-30°
Capacity (MVA)	70	70
No-load tap changer	-5% to +7.5% in 2.5% steps	
Load tap changer		+10% in 32 steps
LTC set point	Set to regulate the low side voltage to 14.0 kV	
CT ratio	600/5	4,000/5
Accuracy class	C400	C800
Thermal rating factor	1.5	1.5
CT connection	wye	wye[Note-1]

Note-1: If the relay does not have internal compensation for transformer phase shift, this CT must be connected in delta configuration. For this example, it is connected in wye and it is assumed that compensation setting is available in the relay.

9.3.2 Transformer and relay currents

Full load currents and relay currents are listed in Table 24.

Table 24 — Load and relay currents, and other relay settings

	High voltage side	**Low voltage side**
Full load current @ 70MVA	342 Amps @ 118 kV tap	2886Amps @ 14 kV LTC set point
Relay current @ 70MVA	2.85 A	3.61 A
Tap	2.85	3.61[Note-2]
Internal compensation[Note-3]	Setting A[Note-3A]	Setting B 30° Lag

Note-2: Most relays can automatically calculate the tap setting based on the rated voltage and MVA.

Note-3: Some relays require this setting where as others automatically determine the setting based on the winding configuration and the phase relationship of the winding with respect to winding 1. In all cases, the compensation setting that eliminates zero sequence current should be chosen for the grounded wye winding.

Note- 3A: Setting specifics depend on the type of the relay

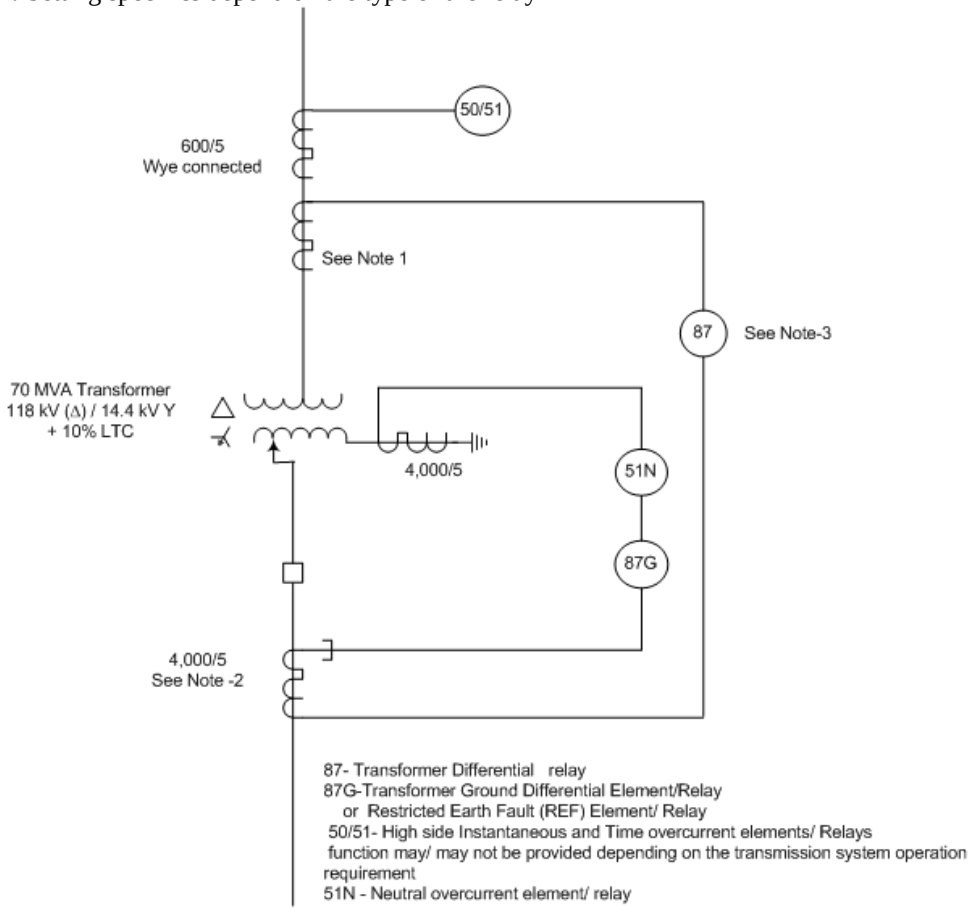

Note-1: Only those CTs used for transformer protection are shown in the diagram.

Note 2: If the differential relay doesn't have the phase shift compensation setting, this CT should be connected in Delta and separate set of CTs or aux. CTs are required for 87G connection.

Note 3: All protection functions can be programmed in a single multifunction Relay. However, if additional CTs are available, for redundancy, 50/51 and 87 are generally connected to separate CTs or a second multifunction relay is installed.

Figure 110 — Protection of a 70 MVA transformer

9.3.3 Differential relay setting

9.3.3.1 Minimum pick-up setting:

The maximum unbalance due to no-load taps setting is 7.5 % and the maximum unbalance due to load-tap Changer is 10 %. The total error due to mismatch is therefore, 17.5 %. The minimum pick-up setting should be greater than this value; a setting of 20% (0.2 times the tap setting) may be selected.

9.3.3.2 Slope of the relay characteristic

The slope is user selectable. Slope 1 of 25% and slope 2 of 50 % may be selected for this application. The switchover from slope 1 to slope 2 is also user selectable. Switchover at 3 times the tap setting may be selected for this application.

Note: Most modern relays have a second slope setting. Switchover setting varies with the manufacturer.

9.3.3.3 Harmonic blocking

Harmonic blocking is also user selectable. A setting of 15 % may be selected. Manufacturer's advice is usually invaluable in this respect.

9.3.3.4 High set overcurrent protection

A setting of 8 times the tap value may be used. This setting should be higher than the maximum expected inrush current. If the transformer is connected to a weak system, a lower setting may be used.

9.3.4 Instantaneous overcurrent function settings

The instantaneous overcurrent relay setting should be 200% of the maximum fault contribution for a 14 kV bus fault. In this application the fault current for a low-side fault is 1,554 A. The setting of the instantaneous overcurrent function works out to be

$$\frac{(2\times 1,554)}{\text{CT ratio}} = \frac{3,108}{120}$$
$$= 25.9 \text{ A}$$

The overcurrent function (50) may be set at 26 A

9.3.5 Inverse time overcurrent function setting

The pickup is set above the maximum allowable load beyond the transformer top rating when time overcurrent function is used. In this example it is set to 200% of the rating. The pickup, therefore, is

$$\frac{2\times 342}{120} = 5.7 \text{ A} .$$

Time dial setting is coordinated with other relays on 14 kV and 118 kV systems. Moderately inverse characteristic is selected for this application. Relay characteristic curve selected at this location is the moderately inverse type defined in the IEEE Std C37.112™, Standard Inverse-Time Characteristic Equations for Overcurrent Relays. The time dial setting is selected to coordinate with low side overcurrent relays protecting the 14 kV bus.

Note: The overcurrent curve should be below the mechanical damage curve of the transformer.

9.3.6 Neutral overcurrent protection function

The pickup of neutral overcurrent protection function (51N) is set the same as bus ground overcurrent relay on the 14 kV side. Time dial is set to coordinate with bus overcurrent relays. Moderately inverse curve, defined in the IEEE Std C37.112™, Standard Inverse-Time Characteristic Equations for Overcurrent Relays, is selected.

9.3.7 Restriction earth fault function

The transformer differential protection (87) with minimum pickup of 20 to 30 % of rated current is not sensitive to detect ground fault that are close to the grounded neutral of the wye winding. Restricted earth fault protection is provided for this purpose and is usually set at 10 % of the transformer rating with inverse time current characteristic. There is no coordination issue with other system relays because this relay operates only for ground faults on the wye winding of the transformer. Very low time dial and a very inverse time characteristic, defined in the IEEE Std C37.112™, Standard Inverse-Time Characteristic Equations for Overcurrent Relays, can be used for this application.

10. Annex D – Mathematical derivations of algorithms

10.1 Fourier Transform

A voltage signal $v(t)$ can be expressed in the form of Fourier-series as follows.

$$v(t) = \sum_{n=1}^{\infty} (A_n e^{jk\omega t}) \tag{56}$$

Replacing the exponential by the sum of a constant and phasors of fundamental and harmonic frequencies $v(t)$ given by

$$v(t) = \frac{a_0}{2} + \sum_{k=1}^{\infty} \left[a_n \cos(k\omega t) + b_n \sin(k\omega t) \right] \tag{57}$$

where,

$$\omega = \frac{2\pi}{T} \quad \text{and}$$

$$a_0 = \frac{2}{T}\int_0^T v(t)dt;\ a_n = \frac{2}{T}\int_0^T v(t)\cos(k\omega t)dt;\ b_n = \frac{2}{T}\int_0^T v(t)\sin(k\omega t)dt$$

The fundamental component of $v(t)$ can be extracted by setting $k = 1$ and is given as follows:

$$\begin{aligned} a_1 &= \frac{2}{T}\int_0^T v(t)\cos(\omega t)dt \\ b_1 &= \frac{2}{T}\int_0^T v(t)\sin(\omega t)dt \end{aligned} \tag{58}$$

The continuous integrals cannot be implemented by numerical relays and, therefore, the voltage $v(t)$ is sampled N times per period of the lowest frequency component of the voltage. The coefficients of the Discrete Fourier transform are as follows.

$$\begin{aligned} a_1[n] &= \frac{2}{N}\sum_{p=0}^{N-1} v[n-p]\cos(\frac{2\pi}{N}p) \\ b_1[n] &= \frac{2}{N}\sum_{p=0}^{N-1} v[n-p]\sin(\frac{2\pi}{N}p) \end{aligned} \tag{59}$$

where,

v[n] is the quantized value of voltage at time $n \times \Delta T$

ΔT is the time interval between two consecutive samples

p is the sample number in the data window

The phasors representing current samples of the fundamental frequency component are determined using a similar procedure. The Fourier coefficients of the harmonic frequencies can be determined by assigning an appropriate value to the harmonic order k in Equation 57 and proceeding in a manner similar to that used for determining the coefficients of the fundamental frequency.

10.2 Smart Discrete Fourier Transform

This approach is designed to calculate DFT coefficients representing voltages or currents that are sinusoids of a frequency that is not equal to the fundamental frequency of a power system. Consider a voltage signal $v(t)$ is sampled at N time in each period of the sinusoid. The quantized value of the signal can be expressed as

$$v[n] = V\cos(\omega \frac{n}{f_0 N} + \varphi) \tag{60}$$

The phasor representation of this voltage is

$$\bar{V} = V(\cos\varphi + j\sin\varphi) \tag{61}$$

The frequency of the voltage may be expressed as

$$\omega = 2\pi(f_0 + \Delta f) \tag{62}$$

Proceeding in the same manner as done in Section 10.1, the voltage phasor at time $n\times\Delta T$ is given by

$$\hat{V}[n] = A[n] + B[n] \tag{63}$$

where,

$$A[n] = \frac{\bar{V}}{N}\frac{\sin\frac{N\theta_1}{2}}{\sin\frac{\theta_1}{2}}\exp[j\frac{\pi}{f_0 N}(\Delta f(2n+N-1)+2f_0 n)]$$

$$B[n] = \frac{\bar{V}^*}{N}\frac{\sin\frac{N\theta_2}{2}}{\sin\frac{\theta_2}{2}}\exp[-j\frac{\pi}{f_0 N}(\Delta f(2n+N-1)+2f_0(n+N-1))]$$

$$\theta_1 = \frac{2\pi\Delta f}{f_0 N}, \qquad \theta_2 = \frac{2\pi(2f_0+\Delta f)}{f_0 N}$$

Some algebraic manipulation gives the following equation.

$$\hat{V}[n+1]\times a^2 - (\hat{V}[n]+\hat{V}[n+2])\times a + \hat{V}[n+1] = 0 \tag{64}$$

where,

$$a = \exp(j\frac{\pi}{f_0 N}(2\Delta f + 2f_0))$$

Equation 64 is a quadratic equation in "a" that is a complex variable. After the next quantized sample is received, another equation similar to Equation 46 is established. The variable "a" is determined. The frequency deviation is then calculated using the definition of "a" given in Equation 46. The coefficients of $A[n]$ and $B[n]$ are calculated. This approach is described using voltage waveform. Current waveforms can be processed in a similar manner.

10.3 Least Squares Approach

The voltage and current waveforms usually have decaying dc components when a fault occurs at an instant when instantaneous voltage is not such that the fault current starts from its instantaneous value at that instant. A voltage may be defined by a sum of decaying DC component, fundamental frequency and its harmonic components. For the sake of describing this technique, consider that a voltage $v(t)$ consists of an exponentially decaying DC component and fundamental and a third harmonic components as follows.

$$v(t) = A_0 e^{-t/\tau} + A_1 \sin(\omega_1 t + \theta_1) + A_3 \sin(3\omega_1 t + \theta_3) \tag{65}$$

where,

A_0 is the magnitude of the decaying DC component at time $t = 0$

τ is the time constant of the DC component

A_1 is the amplitude of the fundamental frequency component in the voltage waveform

A_3 is the amplitude of the third harmonic component in the voltage waveform

θ_1 is the phase angle of the fundamental frequency component

θ_3 is the phase angle of the third harmonic component

ω_1 is the frequency of the fundamental component in *r*/s

ω_3 is the frequency of the third harmonic component in *r*/s

The exponential term representing the decaying DC can be expanded by using Taylor series expansion. Two terms of the series may be used as an approximation; this approximation can be mathematically expressed as follows.

$$e^{-t/\tau} = 1 - \frac{t}{\tau} \tag{66}$$

Substituting Equation 66 in Equation 65 provides

$$v(t) = A_0 - \frac{A_0}{\tau} t + A_1 \sin(\omega_1 t + \theta_1) + A_3 \sin(3\omega_1 t + \theta_3) \tag{67}$$

Expanding the sine and cosine terms in this equation provides the following equation.

$$\begin{aligned} v(t) = {} & A_0 - \frac{A_0}{\tau} t \\ & + (A_1 \cos\theta_1)\sin(\omega_1 t) + (A_1 \sin\theta_1)\cos(\omega_1 t) \\ & + (A_3 \cos\theta_3)\sin(3\omega_1 t) + (A_3 \sin\theta_3)\cos(3\omega_1 t) \end{aligned} \tag{68}$$

The quantized value of $v(t)$ at $t = t_1$, defined as $v[1]$ can be expressed as follows.

$$\begin{aligned} v[1] = {} & A_0 - \frac{A_0}{\tau} t_1 \\ & + (A_1 \cos\theta_1)\sin(\omega_1 t_1) + (A_1 \sin\theta_1)\cos(\omega_1 t_1) \\ & + (A_3 \cos\theta_3)\sin(3\omega_1 t_1) + (A_3 \sin\theta_3)\cos(3\omega_1 t_1) \end{aligned} \tag{69}$$

This equation can be written in the form of linear equations as

$$v[1] = a_{11}x_1 + a_{12}x_2 + a_{13}x_3 + a_{14}x_4 + a_{15}x_5 + a_{16}x_6 \tag{70}$$

where,

$$a_{11} = \sin(\omega_1 t_1);\ \ a_{12} = \cos(\omega_1 t_1);\ \ a_{13} = \sin(3\omega_0 t_1);\ \ a_{14} = \cos(3\omega_0 t_1);\ \ a_{15} = 1;\ \ a_{16} = t_1$$

and

$$x_1 = A_1 \cos\theta_1;\ \ x_2 = A_1 \sin\theta_1;$$
$$x_3 = A_3 \cos\theta_3;\ \ x_4 = A_3 \sin\theta_3;$$
$$x_5 = 1;\ \ x_6 = -\frac{A_0}{\tau}$$

The sampled and quantized value of the voltage at $t = t_2$ can likewise be written as

$$v[2] = a_{21}x_1 + a_{22}x_2 + a_{23}x_3 + a_{24}x_4 + a_{25}x_5 + a_{26}x_6 \tag{71}$$

where,

$$a_{21} = \sin(\omega_1 t_2);\ \ a_{22} = \cos(\omega_1 t_2);\ \ a_{23} = \sin(3\omega_0 t_2);\ \ a_{24} = \cos(3\omega_0 t_2);\ \ a_{25} = 1;\ \ a_{26} = t_2$$

In this manner, *m* linear equations are generated from *m* samples as follows.

$$a_{11}x_1 + a_{12}x_2 + a_{13}x_3 + a_{14}x_4 + a_{15}x_5 + a_{16}x_6 = v[1]$$

$$a_{21}x_1 + a_{22}x_2 + a_{23}x_3 + a_{24}x_4 + a_{25}x_5 + a_{26}x_6 = v[2]$$

…….

$$a_{m1}x_1 + a_{m2}x_2 + a_{m3}x_3 + a_{m4}x_4 + a_{m5}x_5 + a_{m6}x_6 = v[m]$$

These linear equations can be written in matrix form as follows.

$$\underset{(m\times 7)}{[A]}\ \ \underset{(7\times 1)}{[X]} = \underset{(m\times 1)}{[S]} \tag{72}$$

where,

[S] is vector of quantized values of voltage samples

m is the number samples and for least squares application its value is > 6

Matrix [A] is not a square matrix and it does not have an inverse for solving the unknown values in vector [X]. Pre-multiplying both sides of Equation 72 with the transpose of [A] provides the following equation.

$$\underset{(7\times m)}{[A]^T}\ \ \underset{(m\times 7)}{[A]}\ \ \underset{(7\times 1)}{[X]} = \underset{(7\times m)}{[A]^T}\ \ \underset{(m\times 1)}{[S]} \tag{73}$$

The product $[[A]^T [A]]$ is a square matrix and can be inverted. The vector of unknowns, [X], that includes amplitudes of the fundamental and third harmonic components and their phase angles can be calculated as follows.

$$[X] = \left[\left[[A]^T [A]\right]^{-1} [A]^T\right][S] \tag{74}$$

The matrix $[\,[\,[A]^T[A]\,]^{-1}[A]^T\,]$ is called the left pseudoinverse of [A].

10.4 Prony's Method

Assuming that $v[n]$ is formed by q_1 damped exponentials and q_2 damped sinusoids,

$$v[n] = \sum_{k=1}^{q_1} V_k \exp(-\alpha_k n\Delta t)) + \sum_{k=q_1+1}^{q_1+2q_2} V_k \exp(-\alpha_k n\Delta t)\cos(2\pi f_k n\Delta t + \theta_k) \tag{75}$$

This equation can be written as

$$v[n] = \sum_{k=1}^{p} \beta_k (z_k)^n \tag{76}$$

where,

p	is the order of the signal ($p = q_1 + 2q_2$)
β_k	is the complex magnitude and
z_k	is the complex exponential.

β_k and z_k can be written in terms of the real parameters as follows.

$\beta_k = I_k \exp(j\theta_k)$; for damped exponentials

$\beta_k = \frac{I_k}{2} \exp(j\theta_k)$; for damped sinusoids

$z_k = \exp((-\alpha_k + j2\pi f_k)\Delta t)$

The z_k are necessarily the solutions of a pth order algebraic equation with unknown coefficients e_k and thus satisfy

$$e_p\left(z_k^0\right) + e_{p-1}\left(z_k^1\right) + \cdots + e_1\left(z_k^{p-1}\right) - \left(z_k^p\right) = 0$$

The following equation shows the relation between the unknown coefficients, e_k and the signal $v[n]$.

$$\begin{bmatrix} e_p \\ e_{p-1} \\ \vdots \\ e_1 \end{bmatrix} = \begin{bmatrix} v[0] & v[1] & \vdots & v[p-1] \\ v[1] & v[2] & \vdots & v[p] \\ \vdots & \vdots & \vdots & \vdots \\ v[p-1] & v[p] & \vdots & v[2p-2] \end{bmatrix}^{-1} \begin{bmatrix} v[p] \\ v[p+1] \\ \vdots \\ v[2p-1] \end{bmatrix} \tag{77}$$

After solving the pth order algebraic equation with the obtained e_k, the complex magnitude β_k and the phasor can be determined. Analogue analysis for a current signal, $i[n]$, is performed using a similar procedure.

10.5 Kalman Filter Based Method

The design of Kalman filters requires a state-space model of the waveform whose amplitude and phase angle are to be estimated. The state equation is as follows.

$$x_{k+1} = \Phi_k x_k + w_k \tag{78}$$

The measurement is processed as follows.

$$z_k = H_k x_k + v_k \tag{79}$$

where,

x_k state vector of dimension (n×1)

Φ_k state transition matrix relating the state vector x_{k+1} at time t_{k+1} to the state vector x_k at time t_k; the dimensions of this matrix are (n×n)

w_k is the uncorrelated white noise sequence; dimensions of the noise vector are (n×1)

Z_k is the measurement vector at time t_k; dimensions of this vector are (m×1)

H_k is the measurement matrix that gives the noiseless connection between the measurement vector Z_k and state vector x_k; the dimensions of this matrix are (m×n)

v_k is the uncorrelated white sequence measurement error vector of size (m×1)

Using the measurements Z_k at each time k, the state variables x_k are calculated. This state variable x_k is then used to predict the state variables x_{k+1} at time k+1. The measurement and prediction at time k+1are used to predict the state variable x_{k+2}. The procedure for the Kalman filters is implemented by the following procedure.

— Estimate the initial values of the state vector $\hat{x}_0$ and its error covariance $\hat{P}_0$

— Compute Kalman gain using the equation $K_k = \hat{P}_k H_k^T (H_k \hat{P}_k^{-1} H_k^T + R_k)^{-1}$

— Update estimate of state vector using the latest measurement z_k using the equation $x_k = \hat{x}_k + K_k (z_k - H_k \hat{x}_k)$

— Compute error covariance using the equation $P_k = (1 - K_k H_k)\hat{P}_k$

— Project ahead and the estimate the state vector at k+1 using equation $\hat{x}_{k+1} = \Phi_k x_k$

— Calculate the co-variance matrix using the equation $\hat{P}_{k+1} = \Phi_k P_k \Phi_k^T + Q_k$

— Return to step 2 (calculate new Kalman gains and continuing as listed.

In the equation listed above,

Q_k is the covariance matrix for w_k

R_k is the covariance matrix for v_k

P_k is the error covariance matrix

10.6 Modeling approach for transformer protection

As shown in Section 6.5.1, the primary voltage, v_1 may be expressed as a function of the current i_1 in the primary winding, the resistance r_1 and leakage inductance l_1 of the primary winding and the mutual flux linkages Λ as follows.

$$v_1 = r_1 i_1 + l_1 \frac{di_1}{dt} + \frac{d\Lambda}{dt} \tag{80}$$

Similarly, the voltage v_2 can be expressed as a function of the current, i_2, in the secondary winding and the resistance r_2 and the leakage inductance l_2 of the secondary winding and the mutual flux linkages as follows.

$$v_2 = -r_2 i_2 - l_2 \frac{di_2}{dt} + \frac{d\Lambda}{dt} \tag{81}$$

Equations 80 and 81 can be combined to eliminate the mutual flux linkages; this provides the following equation

$$v_1 = r_1 i_1 + l_1 \frac{di_1}{dt} + v_2 + r_2 i_2 + l_2 \frac{di_2}{dt} \tag{82}$$

Integrating both sides of this equation from time t_1 to t_2 provides

$$\int_{t=t_1}^{t_2} v_1 dt = \left(r_1 \int_{t=t_1}^{t_2} i_1 dt \right) + l_1 \left[i_1(t_2) - i_1(t_1) \right] + \left(\int_{t=t_1}^{t_2} v_2 dt \right) + \left(r_2 \int_{t=t_1}^{t_2} i_2 dt \right) + l_2 \left[i_2(t_2) - i_2(t_1) \right] \tag{83}$$

If the time from time t_1 to t_2 is one sampling interval, ΔT, and the samples taken at time t_1 are identified by the subscript k, the samples taken at time t_2 are identified by the subscript k+1 and the trapezoidal rule is used to integrate the terms in Equation 83, the following equation is obtained

$$\begin{aligned} \frac{\Delta T}{2}\left(v_{1(k)} + v_{1(k+1)}\right) = {} & \frac{\Delta T}{2} r_1 \left(i_{1(k)} + i_{1(k+1)}\right) + l_1 \left(i_{1(k+1)} - i_{1(k)}\right) + \frac{\Delta T}{2}\left(v_{2(k)} + v_{2(k+1)}\right) \\ & + \frac{\Delta T}{2} r_2 \left(i_{2(k)} + i_{2(k+1)}\right) + l_2 \left(i_{2(k+1)} - i_{2(k)}\right) \end{aligned} \tag{84}$$

This equation expresses the integration of the primary voltage as a function of the secondary voltage, currents in the primary and secondary windings and the transformer parameters. Because the transformer parameters are known, and the primary and secondary voltages and currents are sampled and quantized, the left and right-hand sides of Equation 84 can be calculated at every sampling instant. During normal operation, external faults and magnetizing inrush, the calculated values of the left and right-hand sides of Equation 84 would be equal for all practical purposes but will not be equal during faults in the protection zone of the transformer.

10.6.1 Application to three phase transformers

The technique described in Section 10.6 can be extended to protect banks of three single phase transformers and wye–wye connected transformers.

In this case, the currents in the delta winding have two components, the circulating currents and the non-circulating currents. When the currents in the delta winding of the transformer can be measured, the technique described in the previous section can be applied. If it is possible to measure the currents in the lines leading into the delta winding only, the non-circulating components of the currents in delta windings can be obtained by using the following equations.

$$i_A = \frac{1}{3}\left(i_{LA} - i_{LB}\right);\ i_B = \frac{1}{3}\left(i_{LB} - i_{LBC}\right);\ i_C = \frac{1}{3}\left(i_{LC} - i_{LA}\right) \tag{85}$$

Now following the procedure described earlier to the phase A-a of the transformer the following equation can be obtained.

$$\frac{\Delta T}{2}\left(v_{A(k)}+v_{A(k+1)}\right)=\left(\frac{\Delta T}{2}r_A+l_A\right)i_{A(k)}+\left(\frac{\Delta T}{2}r_A-l_A\right)i_{A(k+1)}+\left(\frac{\Delta T}{2}r_A+l_A\right)i_{p(k)}$$
$$+\left(\frac{\Delta T}{2}r_A-l_A\right)i_{p(k+1)}+\frac{\Delta T}{2}\left(v_{a(k)}+v_{a(k+1)}\right)+\frac{\Delta T}{2}\left(i_{a(k)}+i_{a(k+1)}\right) \tag{86}$$
$$+l_a\left(i_{a(k+1)}-i_{a(k)}\right)$$

Following a similar procedure, the following equations can be obtained for the other two phases.

$$\frac{\Delta T}{2}\left(v_{B(k)}+v_{B(k+1)}\right)=\left(\frac{\Delta T}{2}r_B+l_B\right)i_{B(k)}+\left(\frac{\Delta T}{2}r_B-l_B\right)i_{B(k+1)}+\left(\frac{\Delta T}{2}r_B+l_B\right)i_{p(k)}$$
$$+\left(\frac{\Delta T}{2}r_B-l_B\right)i_{p(k+1)}+\frac{\Delta T}{2}\left(v_{b(k)}+v_{b(k+1)}\right)+\frac{\Delta T}{2}\left(i_{b(k)}+i_{b(k+1)}\right) \tag{87}$$
$$+l_b\left(i_{b(k+1)}-i_{b(k)}\right)$$

$$\frac{\Delta T}{2}\left(v_{C(k)}+v_{C(k+1)}\right)=\left(\frac{\Delta T}{2}r_C+l_C\right)i_{C(k)}+\left(\frac{\Delta T}{2}r_C-l_C\right)i_{C(k+1)}+\left(\frac{\Delta T}{2}r_C+l_C\right)i_{p(k)}$$
$$+\left(\frac{\Delta T}{2}r_C-l_C\right)i_{p(k+1)}+\frac{\Delta T}{2}\left(v_{c(k)}+v_{c(k+1)}\right)+\frac{\Delta T}{2}\left(i_{c(k)}+i_{c(k+1)}\right) \tag{88}$$
$$+l_c\left(i_{c(k+1)}-i_{c(k)}\right)$$

On taking samples of terminal voltages and line currents and quantizing them, the currents in the delta windings can be calculated using Equation 85. From the quantized values of v_A, v_a and i_a and the calculated value of i_A, the following function of i_p can be calculated.

$$\left(\frac{\Delta T}{2}r_A+l_A\right)i_{p(k)}+\left(\frac{\Delta T}{2}r_A-l_A\right)i_{p(k+1)}=\frac{\Delta T}{2}\left(v_{A(k)}+v_{A(k+1)}\right)-\left(\frac{\Delta T}{2}r_A+l_A\right)i_{A(k)}$$
$$-\left(\frac{\Delta T}{2}r_A-l_A\right)i_{A(k+1)}-\frac{\Delta T}{2}\left(v_{a(k)}+v_{a(k+1)}\right) \tag{89}$$
$$-\frac{\Delta T}{2}r_a\left(i_{a(k)}+i_{a(k+1)}\right)-l_a\left(i_{a(k+1)}-i_{a(k)}\right)$$

It can be shown that

$$\left(\frac{\Delta T}{2}r_B+l_B\right)i_{p(k)}+\left(\frac{\Delta T}{2}r_B-l_B\right)i_{p(k+1)}\cong\left[\begin{array}{l}\left(\frac{\Delta T}{2}r_A+l_A\right)i_{p(k)}+\\ \left(\frac{\Delta T}{2}r_A-l_A\right)i_{p(k+1)}\end{array}\right]\times\frac{2l_B+\Delta Tr_B}{2l_A+\Delta Tr_A} \tag{90}$$

Substituting this equation in Equation 87, the values of the sum of the terms containing i_p are estimated. This is then substituted in Equation 86 to calculate its left and right hand sides. A similar procedure is used to calculate the left and right had sides of Equation 88.

The protection function is then be implemented by calculating the absolute values of the right-hand and left-hand sides Equations 86 and 88, and determining if the absolute value of the difference exceeds a threshold. If it does, a counter is incremented. When the counter exceeds a specified ceiling, a trip command is issued. If the absolute value of the difference is less than the threshold, the counter is decremented. The counter reaches a negative ceiling, it is concluded that the transformer is not experiencing a fault.

11. Annex E: Application of low impedance restricted earth fault protection to autotransformers

Biased restricted earth fault protection may also be applied to autotransformers as an alternative to the high-impedance restricted earth fault protection system. This application consists of two restricted earth fault protection elements, one connected to the high-voltage end of the transformer and the other connected to the low-voltage end of the transformer. A trip is initiated if both restricted earth fault protection elements operate as shown in Figure 111.

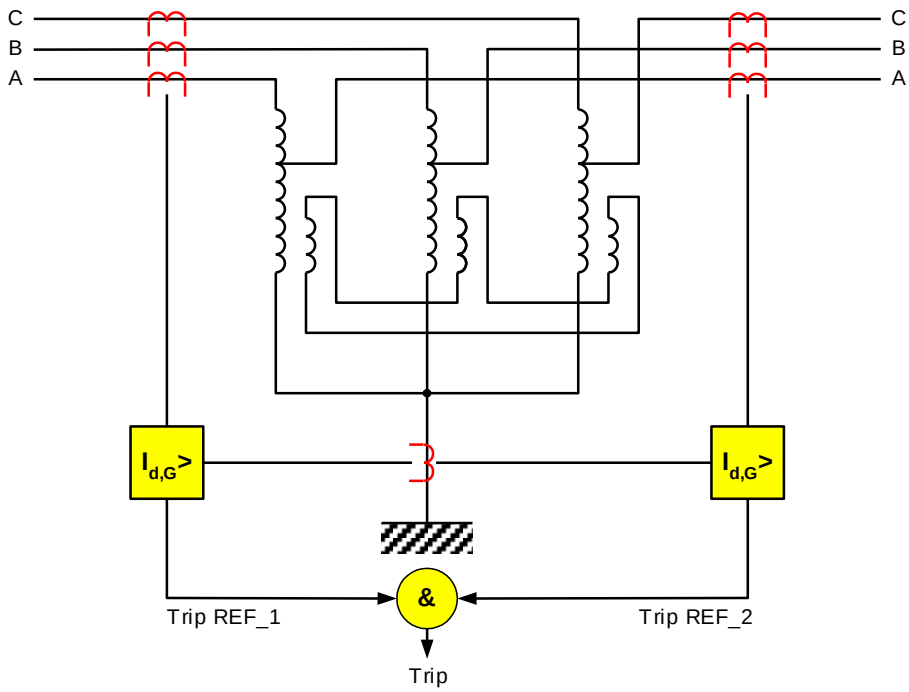

Figure 111 — Low impedance biased earth fault protection for an autotransformer

If the operating mode is set to *Biasing by residual current*, differential current and restraining current are defined as follows:

$$I_{d,G} = \left| k_1 \times \left(\bar{I}_A + \bar{I}_{\mathbf{B}} + \bar{I}_C \right) - k_2 \times \bar{I}_N \right|$$
$$I_{R,G} = \left| k_3 \times \left(\bar{I}_A + \bar{I}_{\mathbf{B}} + \bar{I}_C \right) \right| \qquad (91)$$

The operating current is the sum of the three phase-currents and the neutral current and the restraining current is the sum of the three phase-currents in both protection elements. A straight line tripping characteristic is generally used. The slope of the characteristic has a small pickup level and a slope of one as shown in Figure 112. The tripping characteristic can be defined mathematically as follows.

$I_{d,G} > +m \times I_{R,G}$; where $m = 1.005$

The operating and restraining currents in this characteristic may be substituted from Equation 91; the characteristic is as follows.

$$\left| k_1 \times \left(\bar{I}_A + \bar{I}_{\mathbf{B}} + \bar{I}_C \right) - k_2 \times \bar{I}_N \right| > m \times \left| k_1 \times \left(\bar{I}_A + \bar{I}_{\mathbf{B}} + \bar{I}_C \right) \right|$$

This relay characteristic can be implemented if the current in the transformer neutral is measured by a CT in the transformer neutral to ground connection.

Residual currents due to transient saturation of the phase CTs impact equally the magnitudes of the differential and restraining currents and, therefore the operating-restraining current combination lies below the operating characteristic.

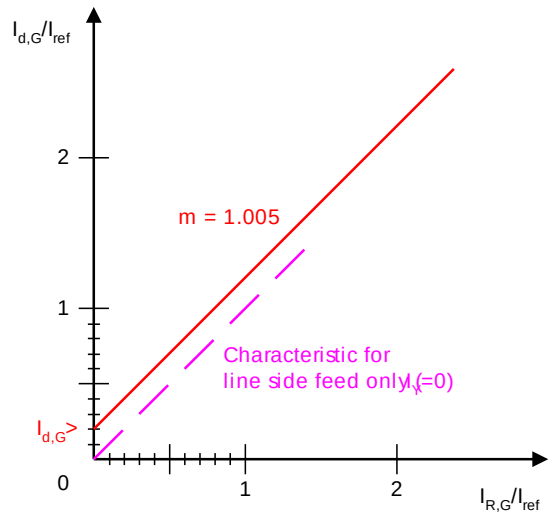

Figure 112 — A typical operating characteristic of the relay

The restraining quality of this approach for biasing is exceptionally favorable behavior. The disadvantage is that this relay cannot be tested by short circuiting the CT of a phase while the transformer is supplying load because the operating and restraining currents are equally impacted by the short circuited CT.

11.1 Symmetrical Load

The sensitivity of the restricted earth fault protection scheme with autotransformers is different from the sensitivity of restricted earth fault protection with separate-winding transformers. A current through the serial winding of an autotransformer induces a current through the common winding. The current in the common winding is determined by the rule of ampere-turns balance in terms of amplitude and polarity and flows from the ground to neutral to the phase winding. When the transformer is supplying balanced load, the current flow from ground to neutral due to currents in the three serial windings adds to zero as shown in Figure 113.

11.2 Internal Ground Fault

The infeed from the low-voltage side when an internal fault occurs on the serial winding of an autotransformer results in a paradox of polarity of the current flowing through the neutral to ground connection. The current flowing in the serial winding induces a current in the common winding according to the rule of ampere-turns balance. The polarity of this current corresponds to an external fault on the high-voltage side of the transformer as shown in Figure 114.

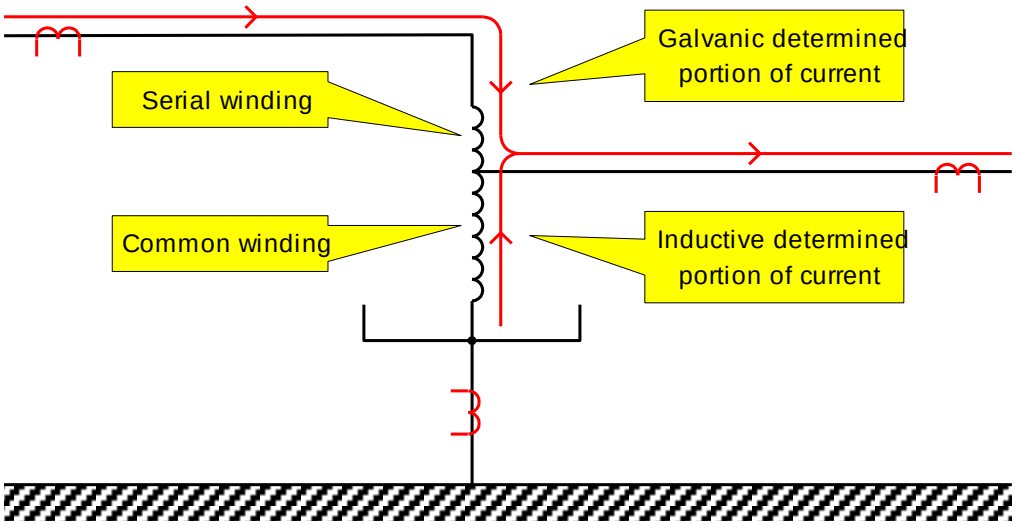

Figure 113 — Current flows during three phase balance loads

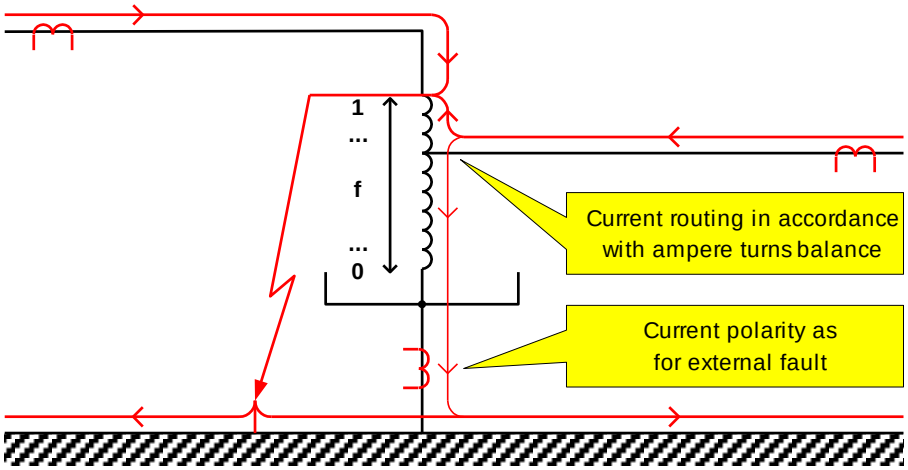

Figure 114 — Current flows during an internal fault

By moving the fault location in the direction of the common winding, a polarity reversal of the neutral current occurs; this depends on the infeed conditions and based on the rule of ampere-turns balance. The current-flows for fault at the junction of the common and serial winding are shown in Figure 115.

The insensitivity of the restricted earth fault protection scheme for fault locations within the serial winding of an autotransformer is not a critical issue in practice because ground faults result in high phase currents that can be detected by transformer differential protection without any problem.

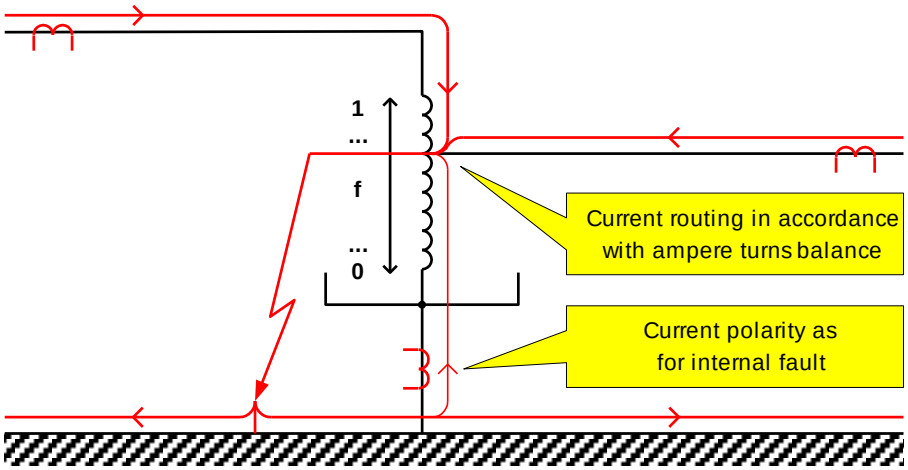

Figure 115 — Current flow reversal with location of an internal fault

11.3 External Ground Fault

The restricted earth fault protection function should be stable during external ground faults. The influence of different current distributions is examined in this section.

Three current distribution configurations can occur for an external ground fault on the low-voltage side. The superposition the three distributions defines the complete scenario. In case 1, the external ground fault is fed directly from the low-voltage side. The circuit is completed by the grounding of the neutral in the low-voltage system as shown in Figure 116. The distribution in this case does not influence the measurement of the restricted earth fault protection function because the relevant current transformers are not affected by this current.

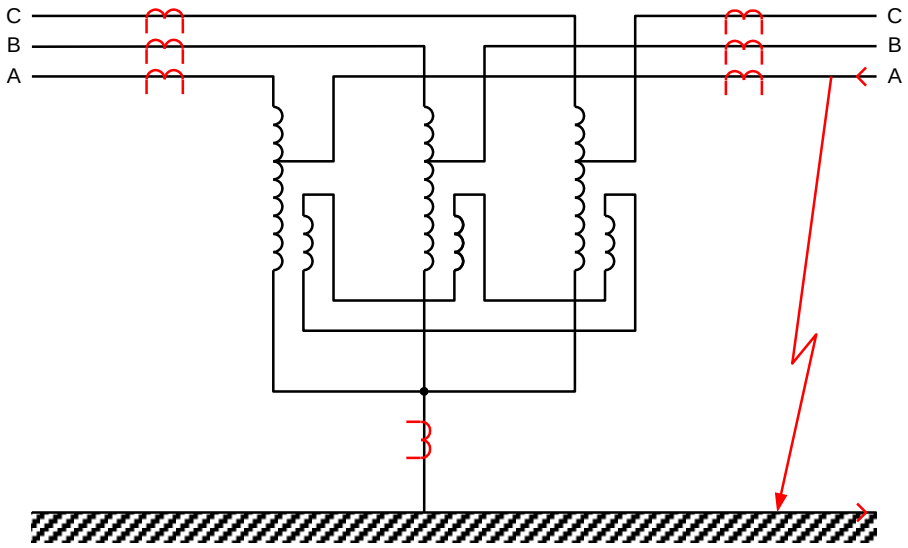

Figure 116 — Current flows during an external fault for case 1

The second scenario is that the external ground fault is also fed from the low-voltage side of the autotransformer. The circuit is completed by the grounded neutral in the low-voltage system as shown in Figure 117.

The HV-side restricted earth fault protection function would operate with this distribution because there would be no restraining current for this function. The LV-side restricted earth fault protection function, on the other hand, would be balanced and would not operate. The AND logic would prevent the tripping of the circuit breakers controlling the autotransformer.

In case 3, the external ground fault is fed from the high-voltage side. The circuit is completed by the star-point grounding in the high-voltage system. The ampere-turns balance, however, forces a current through the common winding of the autotransformer as shown in Figure 118.

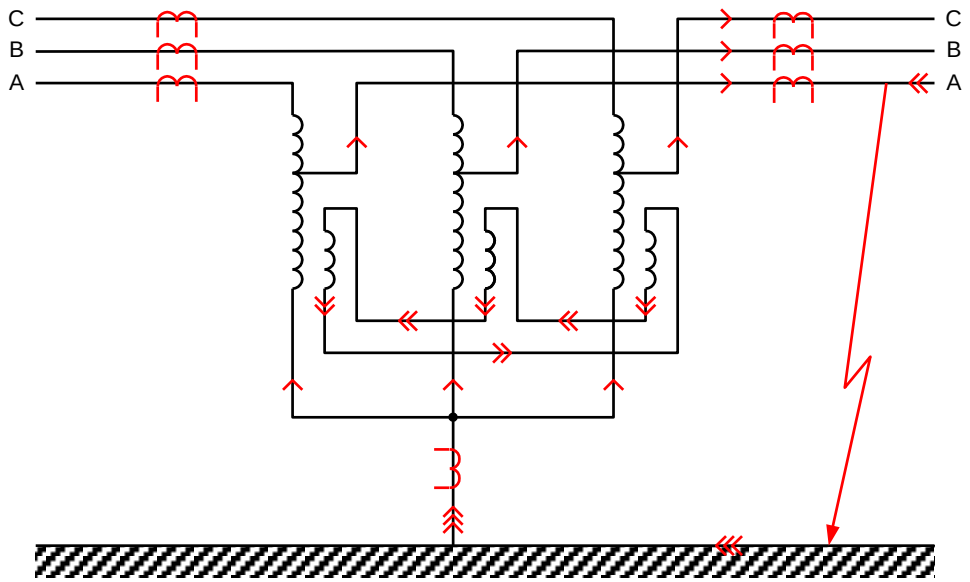

Figure 117 — Current distribution during external fault for case 2

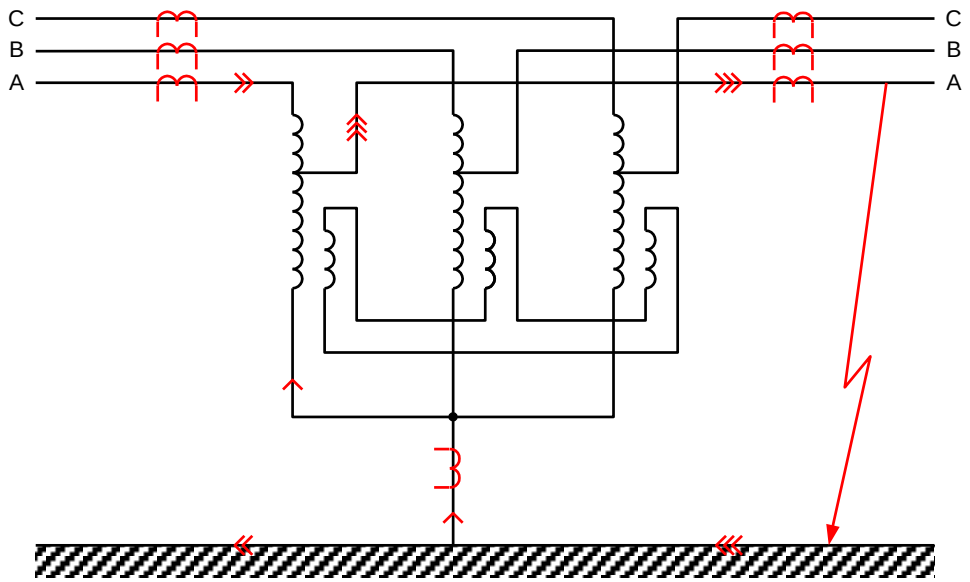

Figure 118 — Current distribution during external fault for case 3

The HV-side restricted earth-fault protection function now measures operating current that is larger than the restraining current. This earth-fault protection element would, therefore operate. The LV-side restricted earth fault protection function would see restraining current in excess of the operating current and, therefore, this element would not operate. The relay logic would therefore not ask the circuit breakers to isolate the autotransformer..

In all cases, the restricted earth fault protection function with operating mode biasing by residual current requires a residual current and a neutral current of equal polarity for tripping. For an external fault, this is never encountered simultaneously for the HV-side and the LV-side restricted earth fault protection functions. Consequently, this protection configuration exhibits the indispensible through-fault stability.

12. Annex F: Vector groups and transformer configurations

A vector group identifies the connections of the windings and the phase relation of the voltage phasors assigned to them. It consists of code letters that specify the connection of the phase windings and a code number that defines the phase displacement.

For three-phase alternating current, a distinction is made between the following phase winding connections:

- Delta connection (D,d)
- Wye connection (Y,y)
- Zigzag connection (Z,z)

The upper-case letters are used for the high-voltage windings, and the lower-case letters are used for the medium and low-voltage windings. The upper-case letter appears first in the vector group. If several windings have the same nominal voltages, the upper-case letter is assigned to the winding having the highest nominal power, and if the windings have identical nominal powers, the upper-case letter is assigned to the winding that is first according to the order of connections given above. If a winding is wye-connected or zigzag-connected and neutral is connected to ground, then the identifying symbol is YN or ZN – for the high voltage windings and yn or zn, for the medium-voltage and low-voltage windings.

The phase displacement is specified using the phasor of the high-voltage winding as reference. The code number, when multiplied by 30°, specifies the angle by which the phasor of the low-voltage winding lags behind the phasor of the high-voltage winding. For multi-winding transformers, the phasor of the high-voltage winding is the reference quantity; the symbol for this winding is given first. The other symbols follow in the order of decreasing nominal winding voltages.

By definition, therefore, the vector group is a function of the viewing direction. The vector groups related to the two viewing directions are complementary and add up to the number 12.

Vector groups for which the corresponding phase windings belong to the same phase are referred to as "true" vector groups. The following listing includes *only* "true" vector groups; it also contains *all* the "true" vector groups that are possible.

"Untrue" vector groups are formed from the "true" vector groups by cyclical reversal or transposition of phases.

By transposing phases A with C, B with A, and C with B, the following vector groups are formed.

- from the "true" vector group Yy0: the "untrue" vector group Yy4
- from the "true" vector group Yy6: the "untrue" vector group Yy10
- from the "true" vector group Yy5: the "untrue" vector group Yy9

By transposing phases A with B, B with C, and C with A, the following vector groups are formed.

- from the "true" vector group Yy0: the "untrue" vector group Yy8
- from the "true" vector group Yy6: the "untrue" vector group Yy2
- from the "true" vector group Yy7: the "untrue" vector group Yy3

All "true" vector groups with Yy connections are as shown the following figure.

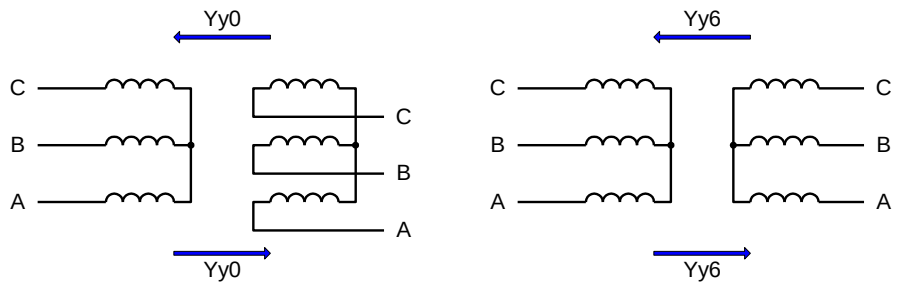

All "true" vector groups with Dy or Yd connections are shown in the following figure.

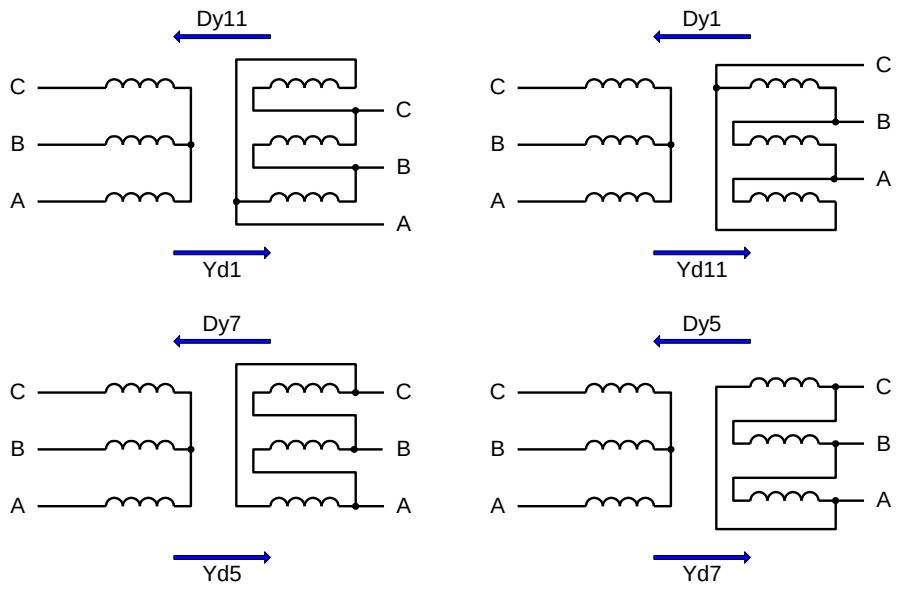

All "true" vector groups with Yz or Zy connections are shown in the following figure.

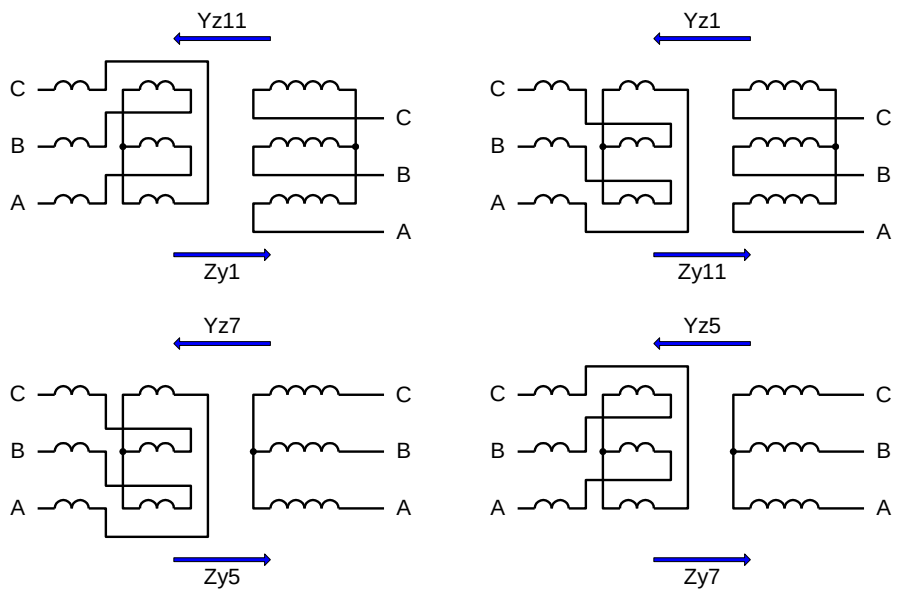

All "true" vector groups with Dz or Zd connections are shown in the following figures.

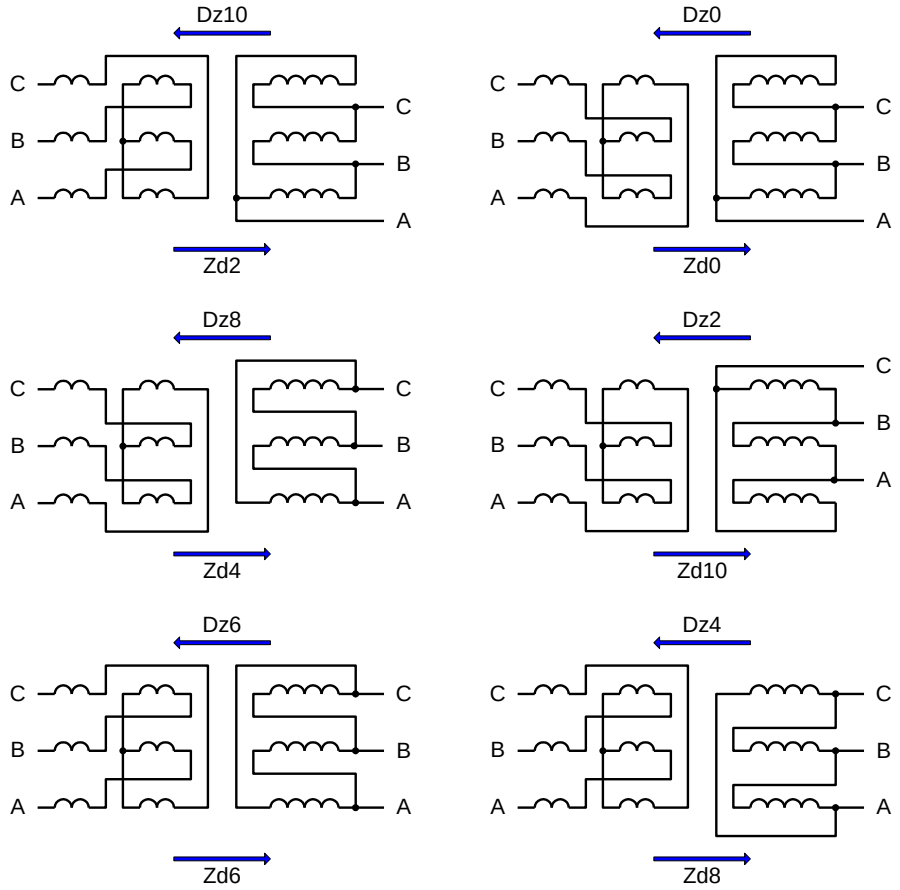

13. Annex G - Frequency response analysis

Transformers are subjected to several electrical and mechanical stresses that may be caused during transportation; system faults such as short circuits or aging also weaken the mechanical strength of the structure of the transformer and its winding support structure. Such damage is difficult to assess, or even detect, and if not detected and corrected, it worsens over a period of time resulting in failure of the transformer.

Frequency response analysis (FRA) is a technique to verify geometric integrity or detect defects in a transformer. FRA is an offline test that consists of measuring impedance of the transformer over a wide range of frequency and comparing the results with similar measurements taken in a previous FRA test.

13.1 Fundamentals of the technique

A transformer can be represented as a network of resistors, inductances and capacitances excited at high frequencies when it is subjected to an FRA test. The response of this network is, therefore, unique for a particular condition of the transformer. Any change in the condition of the transformer, such as during transport, during major tests like short circuit test or during through faults result in change of components of this network resulting in a change in its frequency response.

Frequency response, also called finger print, of a healthy transformer is measured and recorded initially. Any change in the finger print after a major event referred above can be analyzed and deviations are noted. These deviations, if any, are indicative of coil movement or coil deformation, faulty core or core ground, shorted turns or open windings and broken or loose clamping

Many of the physical deformities cannot be detected due to visual limitations, lack of handling facilities or time constraints during regular maintenance. Thus, FRA technique is ideally suited to determine healthiness of a transformer without taking its winding structure out of the tank.

Two methods of carrying out FRA measurements are sweep frequency method and impulse method.

13.1.1 Sweep frequency method

A sinusoidal wave of frequency varying over a wide range, typically 200 Hz to 10 MHz, is used in this method.

13.1.2 Impulse method

A low voltage impulse signal is injected into one terminal of the winding under test and measurements are taken at the other terminals. A typical test set up of FRA measurement by sweep frequency method is shown in Figure 119. The uses of this test and the precautions that should be taken are outlined in Sections 13.2 and 13.3 respectively.

13.2 Salient uses

The salient uses of FRA techniques thus are:

— To check healthy condition of a new transformer.

— To check process deviations in two identically designed transformers.

— To verify integrity of windings and their support structure after a short circuit test.

— To ascertain mechanical damage whenever transformer has undergone mechanical stress such as during transportation from one location to another.

— As a part regular preventive maintenance program.

— To eliminate the need for an internal inspection after a major incident such as a through fault.

— To ensure healthiness after a natural catastrophe such as earthquake or lightening.

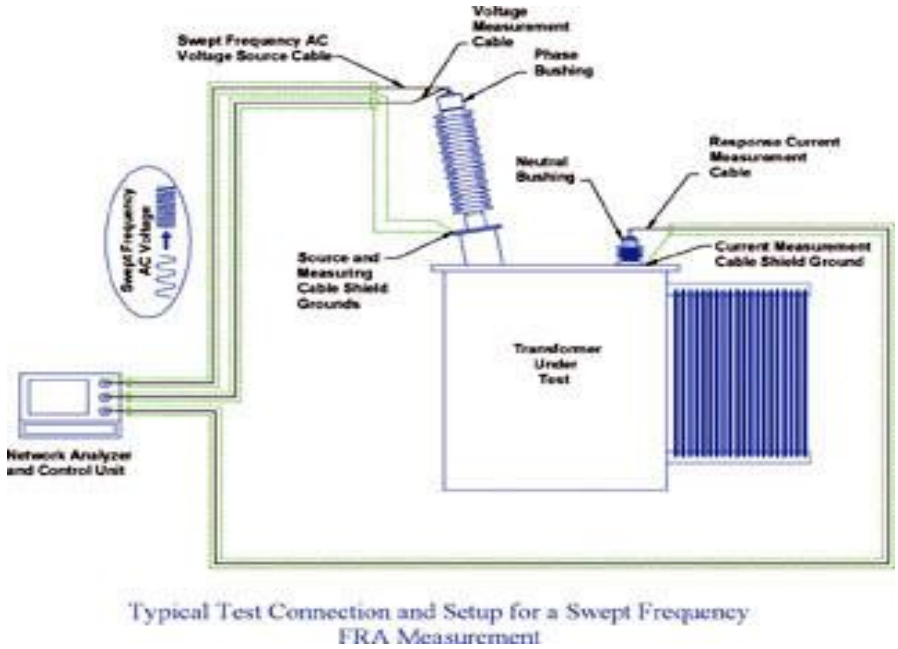

Figure 119 — typical test arrangement for a sweep frequency FRA test

13.3 Precautions to be taken during a FRA test

The FRA technique, though regarded as an extremely useful tool, has its own limitations and therefore certain precautions need to be exercised. Some of these are as follows.

— **Data building:** FRA can only be useful if sufficient data base is created over a period of time so that comparisons can be made.

— **Test conditions:** Test conditions such as lead lengths, temperature of the transformer under test, measuring instruments, need to be same in all tests to have meaningful comparisons.

— **Offline technique:** FRA measurements can only be taken when transformer is disconnected from the power system because it is an offline technique.

— **Need of expertise:** interpretation of deviations, also called signature analysis, is a special job and is subjective. Therefore FRA needs to be corroborated with other tests.

— **Standards/Guidelines:** FRA results cannot be regarded as yet an acceptable norm in the absence of international Codes, Standards or Guidelines.

14. Annex H: References

[1] "Forced Outage Performance of Transmission Equipment for the Period January 1, 1998 to December 31, 2002", Canadian Electricity Association, 1155 Montcalfe Street, Montreal, PQ, Canada, H3B 2V6, pp. 1-146, 2004

[2] A. Wright and P.G. Newbery, Electric Fuses, Institute of Electrical Engineers, Power Series 2, 1982, ISBN 0-906048-78-8

[3] The J & P Switchgear Book, Johnson & Phillips Ltd., Electrical Engineers & Cable Makers, Charlton, London, S.E.7

[4] Warrington, A.R. van C.: "Protective Relays, Their Theory and Practice", Vol. 1, John Wiley and Sons, New York, 1963

[5] Warrington, A.R. van C.: "Protective Relays, Their Theory and Practice", Vol. 2, John Wiley and Sons, New York, 1963

[6] T.S. Madhava Rao, Power System Protection, Static Relays, Tata McGraw-Hill Publishing Company Limited, New Delhi, India, 1979

[7] E.P. Walker, "The Application of Microprocessor Techniques to Protection Relays", Transactions of the Engineering and Operating Division of the Canadian Electrical Association, Montreal, Canada, Vol. 21, Part 3, 1982, Paper No. 82-SP-148

[8] S.H. Horowitz, A.G. Phadke and J.S. Thorp, "Adaptive Transmission System Relaying", IEEE Transactions on Power Delivery, Vol. 3, No. 4, October 1988, pp. 1436-1445

[9] M.S. Sachdev (Coordinator), et al, Advancements in Microprocessor Based Protection and Communication, IEEE Tutorial Course, Institute of Electrical and Electronics Engineers, Piscataway, N.J. U.S.A., Pub No. 97TP120-0, 1997

[10] A.R. Bergen and V. Vittal, "Power System Analysis," 2nd Edition, Prentice Hall, 2000

[11] P.G. Mclaren and M.A. Redfern, "Fourier-series techniques applied to distance protection," Proc. IEE, Vol. 122, No.11, November 1975, 1301-1305

[12] Jun-Zhe Yang and Chih-Wen Liu, "A Precise Calculation of Power System Frequency and Phasor," IEEE Trans on Power Delivery, Vol. 15, No.2, April 2000, pp.494-499

[13] M.S. Sachdev and M.A. Baribeau, "A New Algorithm for Digital Impedance Relays", IEEE Transactions on Power Apparatus and Systems, Vo. 98, No. 6, December 1979, pp. 2232-2240

[14] J. F. Hauer, C. J. Demeure, and L. L. Scharf, "Initial results in Prony analysis of power system response signals," IEEE Trans Power Systems, Vol. 5, No. 1, February 1990, pp. 80-89

[15] O. Chaari, P. Bastard, and M. Meunier, "Prony's method: an efficient tool for the analysis of earth fault currents in Petersen-coil-protected networks," IEEE Trans. Power Delivery, vol. 10, No. 3, July 1995, pp. 1234-1241

[16] R.G. Brown, "Introduction to Random Signal Analysis and Kalman Filtering," John Wiley and Sons, 1983

[17] A.A. Girgis, R. GroverBrown, "Application of Kalman Filtering in Computer Relaying," IEEE Trans, PAS-101, No. 7, July 1981, pp.3471-3480

[18] M.S. Sachdev, H.C. Wood, N.G. Johnson, 1985, "Kalman Filtering Applied to Power System Measurements for Relaying", IEEE Transactions on Power Apparatus and Systems, 104, No. 12, 3565-3573

[19] G.Benmouyal, “Frequency-Doman Characterization of Kalman Filters as Applied to Power System Protection,” IEEE Trans. On Power Delivery, July 1992, Vol. 7, pp. 1129-1138

[20] Sachdev, M.S.; Sidhu, T.S. and Wood, H.C.: "A Digital Relaying Algorithm for Detecting Transformer Winding Faults", IEEE Transactions on Power Delivery, vol. 4, no. 3, pp. 1638-1648, July 1989.

[21] T.S. Sidhu, M.S. Sachdev and H.C. Wood,: "Microprocessor-Based Relay for Protecting Power Transformers", IEE Proceedings, vol. 137, pt. C, no. 6, pp. 436-444, November 1990.

[22] T.S. Sidhu, H.S. Gill and M.S. Sachdev, “A Power Transformer Protection Technique with Stability During Current Transformer Saturation and Ratio-Mismatch Conditions”, IEEE Transactions on Power Delivery, Vol. 14, No. 3, July, pp. 798-804, 1999

[23] McLaren, P. G., et al., “New Directional Element for Numerical Distance Relays”, IEEE Trans. on Power Delivery, Vol. 10, No. 2, 1995, pp. 666-75

[24] Sidhu, T. S., Sunga, B. and Sachdev, M. S., “A Digital Technique for Stator Winding Protection of Synchronous Generators”, Electric Power Systems Research, Vol. 36, 1996, pp. 45-55

[25] Bogdan Kasztenny, Mladen Kezunovic, “Digital Relays Improve Protection of Large Transformers”, IEEE Computer Application in Power, October 1998, pp:39-45

[26] Walter A. Elmore , “Protective Relaying Theory and Application”, ABB Power T&D Company Inc, Relay Division, Coral Springs, Florida, 1995

[27] P.Liu, O.P.Malik, C.Chen, G.S.Hope, and Y.Guo “Improved Operation of Differential Protection of Power Transformers for Internal Faults”, IEEE Trans on Power Delivery, Vol. 7, No.4, 1992, pp.1912-1919.

[28] Sidhu, T. S., Sachdev, M. S., wood, H. C. and Nagpal, M., “Design, Implementation and Testing of A Micor-processor-based High-speed Relay for Detecting Transformer Winding Faults”, IEEE Trans on Power Delivery, Vol. 7, No.1, 1992, pp.108-117.

[29] P Bastard, M Meunier and H Regal, “Neural-Network-Based Algorithm for Power Transformer Differential Relays”, IEE Proc., Generation, Transmission and Distribution, Vol. 142, No. 4, pp. 386-392, July 1995.

[30] G Perez, A J Flechsig, J L Meador and Z Obradovic, “Training an Artificial Neural Network to Discriminate Between Magnetizing Inrush and Internal Fault”, IEEE Trans. On Power Delivery, Vol. 9, No. 1, pp.434-441, January 1994.

[31] Pihler, B Grcar and D Dolinar, “Improved Operation of Power Transformer Protection Using Artificial Neural Network”, IEEE Trans. On Power Delivery, Vol. 12, No. 3, pp.1128-1136, July 1997.

[32] M.R.Zaman, M.A. Rahman, “Experimental Testing of the Artificial Neural Network Based Protection of Power Transformers”, IEEE Trans. On Power Delivery, Vol. 13, No. 2, pp.510-517, April 1998.

[33] W.A.Wilkinson and M.D. Cox, “Discrete Wavelet Analysis of Power System Transients”, IEEE Trans. On Power System, Vol.11, No.4, November 1996, pp:2038-2044.

[34] G. T. Heydt and A. W. Galli, “Transient Power Quality Problems Analyzed Using Wavelets”, IEEE Trans. On Power Delivery, Vol.12, No.2, April 1997, pp:908-915.

[35] Stantosh Kumar Pandey and L .Satish, “Multiresolution Signal Decomposition: A New Tool for Fault Detection in Power Transformers During Impulse Tests”, IEEE Trans. On Power Delivery, Vol.13, No.4, October 1998, pp:1194-1200.

[36] P L Mao, R K Aggarwal, Z Q Bo, “Analysis of Transient Phenomena in Power Transformers using Wavelet Transforms”, the 34th University Power Engineering Conference, United Kingdom, 8-10 Sept. 1999

[37] Walter A. Elmore , “Protective Relaying Theory and Application”, ABB Power T&D Company Inc, Relay Division, Coral Springs, Florida, 1995

[38] Applied Protective Relaying, A New “Silent Sentinels”® Publication, Westinghouse Electric Corporation, Newark, NJ, USA, 1957

[39] G.I. Atabekov, The Relay Protection of High Voltage Networks, Pergamon Press, London, UK, 1960

[40] F.H.Last and A. Stalewski, “Protective Relay Gear as a Part of Automatic Power System Control”, IEE Conference Publication 16, Part I, March 1966

[41] G.D. Rockefeller, “Fault Protection with a Digital Computer”, IEEE Transactions on Power Apparatus and Systems, Vol. 88, No. 4, April 1969, pp.438-461

[42] M.S. Sachdev (Coordinator), et al., Computer Relaying, Tutorial Course Text, Institute of Electrical and Electronic Engineers, New York, N.Y., U.S.A., Pub No. 79 EH0148-7-PWR, 1979

[43] M.S. Sachdev (Coordinator), et al. Microprocessor Relays and Protection Systems, Tutorial Course Text, Institute of Electrical and Electronics Engineers, Piscataway, N.J. U.S.A., Pub No. 88EH0269-1-PWR, 1988

[44] W.D. Breingan, M.M. Chen and T.F. Gallan, “The Laboratory Investigation of a Digital System for the Protection of a Transmission Line”, IEEE Transactions on Power Apparatus and Systems, Vol. 98, No. 2, March 1979, pp. 350-368

[45] Optical Voltage and Current Sensor, NxtPhase Incorporated, Phoenix, AZ, USA

[46] Ziegler, Gerhard, Numerical Distance Protection, Principles and Application, Publicis MCD, Munich and Erlangen, ISBN: 3-89578-142-8, 1999

[47] M.S. Sachdev (Coordinator), et al, Advancements in Microprocessor Based Protection and Communication, IEEE Tutorial Course, Institute of Electrical and Electronics Engineers, Piscataway, N.J. U.S.A., Pub No. 97TP120-0, 1997

[48] Yalla, M.V.V.S., Design and Implementation of a Digital Volts per Hertz Protective Relay for Generators and Transformers”, CIGRÉ SC 34 Colloquium, Johannesburg, South Africa, October 1997, Paper No. 109

15. Annex I: Publications of interest

15.1 Books

[49] Wagner, C.F. and Evans, R.D.: "Symmetrical Components", McGraw-Hill, New York, 1933.

[50] Clark, E.: "Circuit Analysis of A-C Power Systems. Vol. 1 - Symmetrical and Related Components", John Wiley and Sons, New York, 1943.

[51] "Transmission and Distribution Reference Book", Westinghouse Electric Corporation, E. Pittsburgh, 1950.

[52] Clark, E.: "Circuit Analysis of A-C Power Systems. Vol. 2" John Wiley and Sons, New York, 1950.

[53] Blume, L.F.; Boyajian, A.; Camilli, G.; Lennox, T.C.; Minneci, S. and Montsinger, V.M.: Transformer Engineering", John Wiley and Sons, New York, 1951.

[54] Mathews, P.: "Protective Current Transformers and Circuits", Chapman and Hall, 1955.

[55] Mason, C.R.: "The Art and Science of Protective Relaying", John Wiley and Sons, New York, 1956.

[56] "Applied Protective Relaying", Westinghouse Electric Company, East Pittsburgh, 1957.

[57] Hochrainer, A.: "Symmetrische Komponenten in Drehstromsystemen", Springer-Verlag, Berlin, 1957.

[58] "Electrical Transmission and Distribution Reference Book", 4th ed., Westinghouse Electric Corporation, East Pittsburgh, 1959.

[59] "Magnetic Circuits and Transformers", Staff of the Department of Electrical Engineering, MIT, John Wiley and Sons, New York, 1962.

[60] Warrington, A.R. van C.: "Protective Relays, Their Theory and Practice", Vol. 1, John Wiley and Sons, New York, 1963.

[61] Warrington, A.R. van C.: "Protective Relays, Their Theory and Practice", Vol. 2, John Wiley and Sons, New York, 1963.

[62] "Guide for Protective Relay Applications to Power Transformers", ANSI C37.91-1972, IEEE Std. 273-1967.

[63] "General Requirements for Distribution, Power and Regulating Transformers and Shunt Reactors", ANSI Standards C57.12.00-1968.

[64] Stigant, S.A. and Franklin, A.C.: "The J and P Transformer Book", John Wiley and Sons, New York, 1973.

[65] Anderson, P.M.: "Analysis of Faulted Power Systems", The Iowa State University Press, Ames, 1973.

[66] "Applied Protective Relaying", Westinghouse Electric Corporation, Relay- Instrument Division, Newark, 1976.

[67] Funk, G.: "Symmetrische Komponenten", Elitera, Berlin, 1976.

[68] Berggren, J.: "Reläskydd i Elkraftsystem", Kompendium, Institutionen för Elektrisk Anläggningsteknik, Chalmers Tekniska Högskola, Göteborg, 1980.

[69] "Guide for loading mineral-oil immersed power transformers up to and including 100 MVA with 55 Deg C or 65 Deg C winding rise", ANSI/IEEE C57.92-1981.

[70] "Protective Relays Application Guide", Second Edition, GEC Measurements, 1975, Fifth printing, October 1983.

[71] Schuh, E.: "Störungs- und Schadensstatisik 1966-1980 ", Verband der Elektrizitätswerke Österreichs, Wien, 1983.

[72] "Elkraftteknisk handbok. Vol. 4, Elkraftsystem", Esselte Studium, Uppsala, 1984.

[73] "IEEE Guide for Protective Relay Applications to Power Transformers", IEEE Std. C37.91-1985, IEEE, New York, 1985.

[74] "Protective Relays Application Guide", Third Edition, GEC Measurements, London, 1987.

[75] Blackburn, J.L.: "Protective Relaying. Principles and Applications", Marcel Dekker, New York, 1987.

[76] "Power Transformer Protection – Application Guide", AG03-5005, ABB Relays, March 1988.

[77] Phadke, A.G. and Thorp, J.S.: "Computer Relaying for Power Systems", Research Studies Press, Taunton, Somerset and John Wiley and Sons Inc., New York, 1988.

[78] Sachdev, M.S. (Coordinator): "Microprocessor Relays and Protection Systems", IEEE Tutorial Course Text, Publication No. 88EH0269-1-PWR, 1988.

[79] "Nordel DRIFTSTÖRNINGSSTATISTIK 1990 Fault statistics", Nordel, 1992.

[80] Wright, A. and Christopoulos, C.: "Electrical Power System Protection", Chapman and Hall, London, 1993.

[81] IEC 60076-8 Ed 1.0: Power Transformers – Part 8: Application Guide

[82] IEC 60076-1 Ed 2.1: Power Transformers – Part 1: General, Clause 9

[83] ANSI C57.12.10-1997: Transformers 230 kV and below - Clause 10.2 and Figure 7

15.2 Transformer Protection

[84] Wood, E.M: "Protective-Relay Installation at Toronto-Leaside Transformer Station of Hydro-Electric Commission of Ontario", Engineering Institute of Canada Transactions, vol. 36, pp. 141-151, February 1929

[85] Dodge, J.W.: "Relay Protection for Power Transformers", General Electric Review, vol. , pp. 268-272, May 1929.

[86] Stubbings, G.W.: "Power-Transformer Protection", Electrical Review, vol. 114, no. 2939, p. 406, March 23, 1934.

[87] Woodiwiss, W.: "Transformer Protection", Electrical Review, vol. 114, no. 2941, pp. 481-482, April 6, 1934.

[88] Weissmann, H.: "General Problem of Adequately Protecting Transformers", Siemens Zeitschrift, vol. 15, no. 3, pp. 67-74, March 1935.

[89] "Transformer Protection", Electrical Review, vol. 119, p. 707, November 20, 1936.

[90] "Transformer Protective Relay", Engineer, vol. 162, p. 497, November 20, 1936.

[91] "Transformer Protective Relay", Electrical World, vol. 107, p. 436, January 30, 1937.

[92] Calabrese, G.: "Simplified Protection of Grounding Transformers", Electrical World, vol. 107, p. 1393, April 24, 1937.

[93] Martin, W.E.: "Relay Protection for a Large Regulating Transformer", Electrical Journal, vol. 36, no. 3, pp. 86-88, March 1939.

[94] "Grounding Switch Protects Transformer Installed near Center of 50-Mile Line", Electrical World, vol. 121, p. 58, March 4, 1944.

[95] Tipton, E.W.: "Relay for Air-Cooled Type Transformers", Electrical World, vol. 122, pp. 116 + 118, July 8, 1944.

[96] Tipton, E.W.: "An Automatic Watchman for Air-Cooled Transformers", Westinghouse Engineer, vol. 4, pp. 187-189, November 1944.

[97] Mchelson, E.L.: "Rectifier Relay Improves Transformer Protection", Electric Light and Power, vol. 23, pp. 70-73, March 1945.

[98] Michelson, E.L.: "Rectifier Relay for Transformer Protection", AIEE Transactions, vol. 64, pp. 252-254, May 1945.

[99] "Transformer Protection; New Instantaneous Magnetic Balance System", Electrical Review, vol. 137, pp. 711-712, November 16, 1945.

[100] Hess, O.: "Protection of Electrical Machines and Transformers", Brown Boveri Review, vol. 33, pp. 292-293, October 1946.

[101] Ramelot, C.: "New Devices for Rapid Selective Protection of High Tension Transformer Stations and Major Distributing Stations at Medium Voltage", Report 309, CIGRE-Session, Paris, 1946.

[102] Gross, E.T.B.: "Simplicity in Transformer Protection", Electrical Engineering, vol. 66, pp. 564-569, June 1947.

[103] "Relay Protection of Power Transformers", AIEE Committee Report, AIEE Transactions, vol. 66, pp. 911-917, October 1947.

[104] Courvoisier, G.; Meyer, H.; Stoecklin, J. and Matthey-Doret, A.: "Transformer Protection (A) Protection Gear and Schemes. (B) The Selection of Transformer Protection Equipment", Brown Boveri Review, vol. 34, pp 147-173, 1947.

[105] "Transformatorenschutz", Brown Boveri Mitteilungen, vol. pp. 143-, 1947.

[106] Ricker, E.A.: "Automatic Grounding and Air-Break Switches for Protection of Transformer Stations", AIEE Transactions, vol. 68, pt. II, pp. 851-857, 1949.

[107] Dietsch, C.; Henriet, P. and Larrue, C.: "Simplified Devices for the Protection of Extra Hi-Voltage Transformers and Results of Their Application", Report 342, CIGRE-Session, Paris, 1950.

[108] Braun, R.: "Protection of Generators, Transformers, and Motors", Maschinenschaden, vol. 26, no. 5/8, pp. 63-68, 1953.

[109] Blackburn, J.L. and Rockefeller, G.D: "Line and transformer bank relaying systems", AIEE Transactions, vol. 74, pt III (Power Apparatus and Systems), pp. 334-343, June 1955.

[110] Sterner, V.: "The Protection of Large Transformers", Report 348, CIGRE-Session, Paris, June 1958.

[111] Labrie,R.J.: "Protects Auto Transformer Tertiary", Electrical World, vol. 150, no. 2, pp. 60-, July 14, 1958.

[112] Schmidt, W.: "Vergleich der Grösstwerte des Kurzschluss- und Einschaltstromes von Einphasentransformatoren", ETZ-A, vol. 79, no. 21, pp. 801-806, November 1958.

[113] Oakes, P.A.: "Special Circuits for Ground Relay Current Polarization from Autotransformers Having Delta Tertiary", AIEE Transactions, vol. 78, pt. III-B, pp. 1191-1196, December 1959.

[114] Buman, H.A.; Beattie, W.C. and Driscoll, J.M.: "Automatic Trip Protection for Boiler-Turbine-Generator-Transformer Unit Installations", Report 312, CIGRE-Session, Paris, June 1960.

[115] Burgin, E.R.: "A Comparison of Protective Methods and Devices for Industrial Power Transformers", Proceedings of the American Power Conference, vol. 26, pp. 931-938, 1964.

[116] Huber, F.: "Einschaltströmstösse von Verteiltransformatoren", Brown Boveri Mitteilungen, vol. 52, no. 11/12, pp. 908-915, November/December 1965.

[117] Perry, E.R. and Frey, A.M.: "Transformer Protection With High Speed Fault Initiating Switches", Allis-Chalmers Engineering Review, vol. 30, no. 4, pp. 4-8, 1965.

[118] Goodman, E.A.: "Better Accessories Protect Distribution Transformers", Electric Light and Power, vol. , no. , pp. 62-63 + 75, July 1971.

[119] Klemenck, V. and Harlow, J.H.: "Protecting Padmounted Transformers", Allis-Chalmers Engineering Review/Electric Utility Issue, vol. 37, no. 3, pp 8-13, 1972.

[120] Goodman, E.A.: "A New Approach to Distribution Transformer Protection", Proceedings of the American Power Conference, vol. 34, pp. 984-992, 1972.

[121] Smith, B.E. and Balgie, T.R.: "A Protective System for Distribution Transformers", Transmission and Distribution, vol. 25, pp. 49-50, September 1973.

[122] Brubaker, J.F.: "Fault Protection and Indication on Substation Transformers", IEEE Transactions on Industry Applications, vol. IA-13, no. 3, pp. 199-207, May/June 1977.

[123] Lazar, I.: "Transformer Protection and Relaying in Industrial Power Plants", Power Engineering, vol. 83, no. 5, pp. 56-61, May 1979.

[124] Larson, R.R.; Flechsig, A.J. Jr. and Schweitzer, E.O.: "The design and test of a digital relay for transformer protection", IEEE Transactions on Power Apparatus and Systems, vol. PAS-98, no. 3, pp. 795-805, May/June 1979.

[125] Van Geem, N.: "Substation Transformer Protection Studies", Transmission and Distribution, vol. 31, no. 12, pp. 40-44 + 78, December 1979.

[126] Brann, J.G.: "'Zirarc' overcurrent protection for three-phase transformers", Journal Electrical and Electronics Engineers Australia, vol. 1, no. 1, pp. 8-12, March 1981.

[127] Parker, D.R.: "Transformer Overcurrent Protection - a Ten-Point View", IEEE Transactions on Power Apparatus and Systems, vol. PAS-101, no. 6, pp. 1723-1726, June 1982.

[128] Griffin, C.H.: "Relay Protection of Generator Station Service Transformers", IEEE Transactions on Power Apparatus and Systems, vol. PAS-101, no. 8, pp. 2780-2789, August 1982.

[129] Rahman, M.A.; Dash, P.K. and Downton, E.R.: "Digital Protection of Power Transformer Based on Weighted Least Square Algorithm", IEEE Transactions on Power Apparatus and Systems, vol. PAS-101, no. 11, pp. 4204-4210, November 1982.

[130] Dua, G.L.: "Protection for distribution transformers (power transformers)", Electrical India, vol. 24, no. 6, pp. 59-62, 31 March 1984.

[131] Lakhiani, V.K. and Vir, D.: "Protection of tertiary winding of transformer", Electr. India, vol. 24, no. 24, pp. 23-24, 31 December 1984.

[132] Degens, A.J. and Langedijk, J.J.M.: "Integral approach to the protection of power transformers by means of a microprocessor", Electrical Power and Energy Systems, vol. 7, no. 1, pp. 37-47, January 1985.

[133] White, T.: "Method of Protecting Distribution Transformers Connected Solidly to an Urban 11 kV Network", IEE Proceedings, vol. 133, pt. C: Generation, Transmission and Distribution, no. 7, November 1986.

[134] Hill, A. and Kibart, W.: "New Techniques in Transformer Protection", Transactions of the Engineering and Operating Division of the CEA, vol. 25, pt. 3, Paper No. 86-SP-153, 1986.

[135] Kischefsky, J.A.: "Primary Protection for Network Transformers", Transactions CEA E&O Div., Montreal, vol. 26, pt. 1, 1987, Paper No. 87-D-47.

[136] Maun, J.-C.: "Hardware and software design of a digital protection relay for power transformers", Conference on "Computer Relaying - An assessment of Recent Development and Future Trends", Blacksburg - Virginia, 1987, 14 p.

[137] Murty, Y.V.V.S.; Smolinski, W.J. and Sivakumar, S.: "Design of a digital protection scheme for power transformers using optimal state observers", IEE Proceedings, vol. 135, pt. C, no. 3, pp. 224-230, May 1988.

[138] Mudditt, P. and Niven, R.: "Developments in Transformer Protection", Fourth International Conference on Developments in Power System Protection, IEE Publication Number 302, 1989, pp. 61-65.

[139] Plumtre, F.P.: "Nelway Substation Phase Shifting Transformer Protection", 17th Annual Western Protective Relay Conference, Spokane, October, 22-25, 1990.

[140] T.S. Sidhu, M.S. Sachdev and H.C. Wood,: "Microprocessor-Based Relay for Protecting Power Transformers", IEE Proceedings, vol. 137, pt. C, no. 6, pp. 436-444, November 1990.

[141] M.A. Rahman and I. Hermanto,: "Design and Testing of Microprocessor-Based Protective Relay for Power Transformer", Transactions CEA E&O Div., vol. 29, Paper No. 90-SP-161, 1990.

[142] H.K. Verma and A.M. Basha,: "Microprocessor-based Comprehensive Relaying Scheme for Power Transformer Protection", Electric Power Systems Research, vol. 19, pp. 115-127, 1990.

[143] I. Hermanto, Y.V.V.S. Murty and M.A. Rahman: "A Stand-Alone Digital Protective Relay for Power Transformers", IEEE Transactions on Power Delivery, vol. 6, no. 1, pp. 85-95, 1991.

[144] Ibrahim, M.A. and Stacom, F.P.: "Protection of the East Garden City 345 kV Phase Angle Regulating Transformers" Protective Relaying Conference Georgia Institute of Technology, Atlanta, April 28-May 1, 1992.

[145] Theunissen, J.M.: "Cost Effective 'Protection Module' Designs for Power Transformer Protection and Control Schemes", Fifth International Conference on Developments in Power System Protection, Conference Publication No. 368, IEE, London, pp. 244-247, 1993.

[146] Ibrahim, M.A. and Stacom, F.P.: "Phase Angle Regulating Transformer Protection", IEEE Transactions on Power Delivery, vol. 9, no. 1, pp. 394-404, January 1994.

[147] Kasztenny, B.; Rosolowski, E.; Saha, M.M.; Hillstrom, B.: "A multi-criteria fuzzy logic transformer protection", Sixth International Conference on Developments in Power System Protection, University of Nottingham, UK, 25-27th March 1997, IEE Conference Publication No. 434, pp. 143-146, The Institution of Electrical Engineers, London, 1997.

[148] Štumberger, G.; Grcar, B. and Dolinar, D.: "Power Transformer Protection Based on Current and Voltage Measurement", Proceedings of the 11th International Conference on Power System Protection PSP'98, Bled, Slovenia, pp. 59-63, 30 September - 2 October, 1998.

15.3 Fuses

[149] Slepian, J. and Denault, C.L.: "The Expulsion Fuse", AIEE Transactions, vol. 51, pp. 157-175, 1932.

[150] Strom, A.P. and Rawlins, H.L.: "The Boric Acid Fuse", AIEE Transactions, vol. 51, pp. 1020-1026, 1932.

[151] Fahnoe, H.H.: "A New High Interrupting Capacity Fuse for Voltages Through 138 kV", AIEE Transactions, vol. 62, pp. 630-635, 1943.

[152] Gruesen, K.R. and Larner, R.A.: "Fuse Protection of High-Voltage Power Transformers", AIEE Transactions, vol. 78, pt. III A, pp. 864-878, October 1959.

[153] Gitzgerald, E.M. and Stewart, V.N.: "High Capacity Current Limiting Fuses Today", AIEE Transactions, vol. 78, pt. III A, pp. 937-947, 1959.

[154] Larner, R.A. and Gruesen, K.R.: "Fuse Protection of High Voltage Transformers", AIEE Transactions, vol. 78, pp. 864-878, 1959.

[155] Cameron, L.F.: "The Application of High-Voltage Power Fuses", Westinghouse Engineer, vol. 23, no. 3, pp. 90-93, May 1963.

[156] Barger, J.L.: "C L Fuses Can Prevent Catastrophic Failures", Electrical World, vol. , pp. 56-58, October 15, 1973.

[157] Goodman, E.A.: "Two-Fuse Protection for Pole-Type Transformers", Allis-Chalmers Engineering Review/electric Utility Issue, vol. 38, no. 3, pp. 17-19, 1973.

[158] Kirby, J.R.; Hayden, J.M.: "Individual Primary Fusing of Single-Phase, Padmounted Transformers with CL Fuses in Dry-Well Canisters", The Line, vol. , no. 1, pp. 23-28, 1977.

[159] Leach, J.G.: "Current-Limiting Fuses: Transformer Through-Fault Protection", Electric Forum, vol. 9, no. 2, pp. 29-31, 1983.

15.4 Differential Protection

[160] Sleeper, H.P.: "Ratio-Differential Relay Protection", Electrical World, vol. , pp. 827-831, October 22, 1927.

[161] Cordray, R.E.: "Percentage-Differential Transformer Protection", Electrical Engineering, vol. 50, pp. 361-363, May 1931.

[162] Cordray, R.E.: "Preventing False Operation of Differential Relays", Electrical World, vol. , pp. 160-161, July 25, 1931.

[163] Geise, F.: "Der stabilisierte Differentialschutz", Siemens Zeitschrift, vol. , pp. 413-, 1932.

[164] Geise, F.: "Fortschritte beim Bau von stabilisierten Differentialschutz Anlagen", Siemens Zeitschrift, vol. 16, pp. 283-, August 1936.

[165] Brodsky, V.P.: "Scott Two-Three-Phase Banks, Differential Relays", Electrical World, vol. 107, p. 1590, May 8, 1937.

[166] Kennedy, L.F. and Hayward, C.D.: "Harmonic-Current-Restrained Relays for Differential Protection", AIEE Transactions, vol. 57, pp. 262-271, May 1938.

[167] Geise, F.: "Schnelldifferentialschutz fur Grosstransformatoren und die Netzstaffelung", Siemens Zeitschrift, vol. , pp. 491-, 1938.

[168] Hayward, C.D.: "Harmonic-Current-Restrained Relays for Transformer Differential Protection", AIEE Transactions, vol. 60, pp. 377-382 + 622, 1941.

[169] Hayward, C.D.: "Prolonged Inrush Currents with Parallel Transformers Affect Differential Relaying", AIEE Transactions, vol. 60, pp. 1096-1101, December 1941.

[170] Hayward, C.D.: "Prolonged Inrush Currents with Parallel Transformers Affect Differential Relaying (Disc.)", AIEE Transactions, vol. 60, pp. 1305-1312, December 1941.

[171] Shill, P.W.: "A Practical Discussion of Problems in Transformer Differential Protection", AIEE Transactions, vol. 61, pp. 854-858 + 1067-1069, 1942.

[172] Seeley, H.T.: "The Effect of Current-Transformer Residual Magnetism on Balanced Current or Differential Relays", AIEE Transactions, vol. 62, pp. 164-168 + disc. p. 384, 1943.

[173] Burkhalter, A.H.: "Differential Protection of Generator-Transformer", Electrical World, vol. 122, pp. 87-89, August 5, 1944.

[174] Forrest, H.E.: "Transformer Protection; Differential Circulating Principle", Electrical Review, vol. 136, pp. 23-26, January 5, 1945.

[175] Bertola, G.: "Fortschritte im Transformatorschutz durch einschaltsichre Prozentdifferentialrelais", Brown Boveri Mitteilungen, vol. 32, pp. 129-, 1945.

[176] Hoel, H. and Stoecklin, J.: "Ein einschaltsichres Prozentdifferentialrelais für Transformatoren", Bull. SEV, vol. 36, pp. 160-163, 1945.

[177] Wellings, J.G. and Mathews, P.: "Instantaneous Magnetic Balance Protection for Power Transformers", Electrical Times, vol. 108, pp. 556-558, 1945.

[178] De Guilmo, J.M.: "Differential Protection, Delta-Wye Transformer Banks", Electrical World, vol. 126, p. 74, August 3, 1946.

[179] De Guilmo, J.M.: "Differential Protection, Delta-Wye Transformer Banks", Electrical World, vol. 126, p. 89, August 17, 1946.

[180] De Guilmo, J.M.: "Differential Protection, Delta-Wye Transformer Banks", Electrical World, vol. 126, pp. 74 + 76, August 31, 1946.

[181] De Guilmo, J.M.: "Differential Protection, Delta-Wye Transformer Banks", Electrical World, vol. 126, pp. 114 + 117, September 14, 1946.

[182] Linders, J.R.: "Differential Relay Protection Extended to Tertiary Winding", Electrical World, vol. 126, p. 100, October 12, 1946.

[183] Wellings, J.G. and Mathews, P.: "Instantaneous Magnetic Balance Protection for Power Transformers", BTH Activities, vol. 19, pp. 30-32, 1946.

[184] Muratori, A.: "Practical Measures for Obtaining Differential Protection", Elettrotecnica, vol. 36, pp. 32-37, 1949.

[185] Headley, C.L.: "Differential Relay Sensitivity Adjuster", Elec. Engineering, vol. 69, pp. 967-, 1950.

[186] Headley, C.L.: "Differential Relay Sensitivity Adjuster", AIEE Transactions, vol. 69, pt. II, pp. 1203-1206, 1950.

[187] McKenna, G.W.: "Theory and Application of Transformer Differential Protection", AIEE Transactions, vol. 69, pt. II, pp. 1197-1202, 1950.

[188] Shah, V.B.: "Power Transformer Protection. Checking Connections of Ratio Differential and Circulating Current Relays", Elect. Review, vol. 149, pp. 937-940, 1950.

[189] Beckwith, R.W.: "A New Carrier-Current Frequency-Shift System for Use with Differential Protection of Transformer Banks", AIEE Transactions, vol. 70, pt. I, pp. 832-835, 1951.

[190] Neugebauer, H.: "Instrumentation Details of the New Siemens Differential Protection", Siemens Zeitschrift, vol. 26, pp. 219-224, 1952.

[191] Ferschl, L.: "Neuartige stabilisierte Differntialschutzeinrichtungen", Elektrotechnik und Maschinenbau, vol. , pp. 285-, 1953.

[192] Mathews, C.A.: "An Improved Transformer Differential Relay", AIEE Transactions, vol. 73, pt. III-A (Electrical Engineering), pp. 645-650, June 1954.

[193] Spiess, H.: "A New Surge-Restrained Differential Relay for Transformer Protection", Bull. Oerlikon, no. 306, pp. 77-90, October 1954.

[194] Drozdov, A.D.: "Differential Protection Circuits with Magnetic Restraint", Electric Technology, vol. 1, pp. 129-137, 1957

[195] Gutmann, H.: " A New Inrush-Current-Proof Fast Differential Relay", AEG Mitt., vol. 48, no. 2-3, pp. 96-98, February-March 1958.

[196] Grasl, H.: "Differential Protection of Transformers with Stabilization by Fundamental and Higher Harmonics", W. S. W. Technische Berichte (Vienna), vol. 10, no. 1, pp. 3-10, March 1958.

[197] Sharp, R.L. and Glassburn, W.E.: "A Transformer Differential Relay with Second-Harmonic Restraint", AIEE Transactions, vol. 77, pt. III, pp. 913-918, December 1958.

[198] Gutmann, H.: "Blocking Relay for Stabilizing High Speed Differential Relays Against Transformer Switching-in Currents", AEG Progress, vol. 1, pp. 35-37, 1958.

[199] Gutmann, H: "A New High-Speed Differential Relay with Harmonic Restraint", AEG Progress, no. 5, pp. 333-335, 1958.

[200] Lauper, P.: "Static Type Percentage Differential Relay for Transformer Protection", Bulletin Oerlikon, no. 352, pp. 8-17, June 1963.

[201] Sturton, A.B.: "A New Differential Stand-by Protection", Electrical Engineering, vol. 82, pp. 745-746, December 1963.

[202] Larpenter, C.R.: "Differential Protection of Transformer Banks with Grounding Transformer", Transmission and Distribution, vol. 16, no. 7, pp. 20-22, July 1964.

[203] "New Triple Pole Differential Relay DZ", Brown Boveri Review, vol. , no. 1, pp. 65-66, January/February 1965.

[204] Hegazy, M.: "New Principle for Using Full-Wave Rectifiers in Differential Protection of Transformers", Proceedings IEE, vol. 116, no. 3, pp. 425-428, March 1969.

[205] Sykes, J.A. and Morrison, I.F.: "A Proposed Method of Harmonic Restraint Differential Protection of Transformers by Digital Computer", IEEE Transactions on Power Apparatus and Systems, vol. PAS-91, no. 3, pp. 1260-1272, May/June 1972.

[206] Einvall, C.H. and Linders, J.R.: "A Three-Phase Differential Relay for Transformer Protection", IEEE Transactions on Power Apparatus and Systems, vol. PAS-94, no. 6, pp. 1971-1980, November/December 1975.

[207] Skyes, J.A. and Morrison, I.F.: "A Proposed Method of Harmonic Restraint Differential Protection of Transformers by Digital Computer", IEEE Transactions on Power Apparatus and Systems, vol. PAS-91, no. 3, pp. 1266-1272, May/June 1977.

[208] Ilar, M.: "A New Transformer Differential Relay and Pilot Wire Relay from Brown Boveri", Brown Boveri Review, vol. 68, no. 2, pp. 70-78, February 1981.

[209] Shverin, N.G.: "Serial-parallel multizone differential protection circuit for power transformers", Soviet Power Engineering, vol. 10, no. 3, pp. 464-469, March 1981.

[210] Degens, A.J.: "Algorithm for a digital transformer differential protection based on least-squares curve-fitting", IEE Proceedings, vol. 128, pt. C, no. 3, pp. 155-161, May 1981.

[211] Sachdev, M.S. and Shah, D.V.: "Transformer Differential and Restricted Earth Fault Protection Using a Digital Processor", Paper No. 81-SP-155, Transactions of the Canadian Electrical Association, Engineering and Operating Division, vol. 20, pt. 4, 1981.

[212] Thorp, J.S. and Phadke, A.G.: "A Microprocessor Based Three-Phase Transformer Differential Relay", IEEE Transactions on Power Apparatus and Systems, vol. PAS-101, no. 2, pp. 426-432, February 1982.

[213] Phadke, A.G. and Thorp, J.S.: "A New Computer-Based Flux-Restrained Current-Differential Relay for Power Transformer Protection", IEEE Transactions on Power Apparatus and Systems, vol. PAS-102, no. 11, pp. 3624-3629, November 1983.

[214] Hibner, H.: "New idea of digital transformer differential protection", Arch. Elektrotech. (Poland), vol. 33, no. 1-2, pp. 349-351, 1984.

[215] Rahman, M.; Jayasurya, B. and Gangopadhyay, A.: "Digital Differential Protection of Power Transformer Based on Walsh Functions", Transactions of the Engineering and Operating Division of the CEA, vol. 24, pt. 3, Paper No. 85-SP-149, 1985.

[216] Verma, H.K. and Basha, A.M.: "Transformer differential relay based on waveform approach", Journal of the Institution of Engineers (India) Electrical Engineering Division, vol. 67, pt. EL3, pp. 132-137, December 1986.

[217] Verma, H.K. and Basha, A.M.: "A microprocessor-based inrush restrained differential relay for transformer protection", Journal of Microcomputer Applications, vol. 9, pp. 313-318, 1986.

[218] Verma, H.K.; Chhajta, S.S.: "Microprocessor-based variable-bias differential relay for generator protection", Journal of Microcomputer Applications, vol. 10, no. 1, pp. 63-69, January 1987

[219] Menon, T.V.G.: "Non-conventional approach to transformer differential relaying", Electrical India, vol. 26, no. 10, pp. 29-38, May 31, 1987.

[220] Murty, Y.V.V.S. and Smolinski, W.J.: "Design and Implementation of a Digital Differential Relay for a 3-Phase Power Transformer based on Kalman Filtering Theory", IEEE Transactions on Power Delivery, vol. 3, no. 2, pp. 525-533, April 1988.

[221] W.M. Strang: "New Approaches to Differential Relaying/Solid State Power Transformer Protection", 42nd Annual Georgia Tech Protective Relaying Conference, 1988.

[222] Goswami, A.K.: "Modern trend in power transformer protection", Electrical India, vol. 29, no. 4, pp. 33-36, 28 February 1989.

[223] Mikrut, M.; Winkler, W. and Witek, B.: "Performance of Differential Protection for Three-Winding Power Transformers During Transient CTs saturation", Fourth International Conference on Developments in Power System Protection, IEE Publication Number 302, 1989, pp. 66-69.

[224] G.S. Hope; O.P. Malik; D. Chen and P. Liu: "Study of the Non-Operation for Internal Faults of Second Harmonic Restraint Differential Protection of Power Transformers", Transactions CEA E&O Div., vol. 28, pt. 4, 1989, Paper No. 89-SP-141.

[225] Verma, H.K. and Kakoti, G.C.: "Algorithm for harmonic restraint differential relaying based on the discrete Hartley transform", Electric Power Systems Research, vol. 18, no. 2, pp. 125-129, March 1990.

[226] Y.V.V.S. Murty and W.J. Smolinski: "A Kalman Filter Based Digital Percentage Differential and Ground Fault Relay of a 3-Phase Power Transformer", IEEE Transactions on Power Delivery, vol. 5, no. 3, pp. 1299-1313, July 1990.

[227] A. Guiliante and G. Clough: "Advances in the Design of Differential Protection for Power Transformers", Western Protective Relay Conference, October, 22-5, 1990.

[228] M.S. Sachdev and M. Nagpal: "A Least Squares Technique and Differential Protection of Three-Phase Transformers", Transactions CEA E&O Div., vol. 29, Paper No. 90-SP-158, 1990.

[229] J.B. Royle: "Differential Relay Concepts and Applications", Transactions CEA E&O Div., vol. 29, Paper No. 90-SP-157, 1990.

[230] Schiel, L.: "Digital comparison protection for transformers", Elektrie, vol. 44, no. 3, pp. 115-118, 1990.

[231] W.A. Elmore: "Ways to Assure Improper Operation of Transformer Differential Relays", Texas A&M Protective Relaying Conference, April 15-17, 1991.

[232] Elmore, W.A.: "Ways to Assure Improper Operation of Transformer Differential Relays" Western Relay Conference, Spokane, October 22-24, 1991.

[233] R.M. Hayes: "AI in Design: Searching for Differential Relay Protection", IEEE Computer Applications in Power, vol. 4, no. 3, pp. 21-26, 1991.

[234] Liu, P.; Malik, O.P.; Chen, D.; Hope, G. and Guo, Y.: "Improved Operation of Differential Protection of Power Transformers for Internal Faults", Paper No. 92WM206-3 PWRD. IEEE PES Winter Meeting, New York, January 1992.

[235] Haydeman, J. and van der Sluis, L.: "Flux-Based Current-Differential Relay for Power Transformer Protection", Fifth International Conference on Developments in Power System Protection, Conference Publication No. 368, IEE, London, pp. 77-80, 1993.

[236] Wiszniewski, A. and Kasztenny, B.: "Fuzzy Set Approach to Transformer Differential Relay", Fifth International Conference on Developments in Power System Protection, Conference Publication No. 368, IEE, London, pp. 169-172, 1993.

15.5 Distance protection

[237] P. Kacejko, P. Miller and M.Wancerz, “Bulk Transformer and Distance Protection – some aspects of setting”, PSP 2000 Proceedings pp. 279-283.

[238] L. Lohage, “Impedansskydd för transformatorer”, Statens Vattenfallsverk Meddelande DAU 50, Februari 1970.

15.6 Magnetizing Inrush

[239] Kurtz, E.B.: "Transformer Current and Power Inrushes under Load", AIEE Transactions, vol. 56, pp. 989-994, 1937.

[240] Blume, L.F.; Camilli, G.; Farnham, S.B. and Peterson, H.A.: "Transformer magnetising inrush currents and influence on system operation", AIEE Transactions, vol. 63, pp. 355-375 + 423, 1944.

[241] Finzi, L.A. and Mutschler, W.H. Jr.: "The Inrush of Magnetizing Current in Single-Phase Transformers", AIEE Transactions, vol. 70, pt. II, pp. 1436-1438, 1951.

[242] Thacker, M.S. and Rakosh, B.: "The Inrush of Magnetizing Current of Transformers", Elektrotechnik, vol. 23, pp. 93-100, 1951.

[243] Specht, T.R.: "Transformer Magnetizing Inrush Current", AIEE Transactions, vol. 70, pt. I, pp. 323-328, 1951.

[244] "Report on Transformer Magnetizing Current and Its Effect on Relaying and Air Switch Operation", AIEE Committee Report, AIEE Transactions, vol. 70, pt. II, pp. 1730-1740, 1951.

[245] "Transformer Magnetizing Current", AIEE Committee Report, AIEE Transactions, vol. 70, pt. 2, pp. 1733-1739, 1951.

[246] Sonnemann, W.K.; Wagner, C.L. and Rockefeller, G.D.: "Magnetizing Inrush Phenomena in Transformer Banks", AIEE Transactions, vol. 77, pt. III, pp. 884-892, October 1958.

[247] Rockefeller, G.D.; Sonnemann, W.K. and Wagner, C.L.: "Magnetizing Inrush Phenomena in Transformer Banks", AIEE Transactions, vol. 77, pt. III (Power Apparatus and Systems) , pp. 884-892, October 1958.

[248] "Inrush Intelligence for Relays - 1958 Review", Westinghouse Engineer, vol. 19, no. 1, pp. 13-, January 1959.

[249] Sterner, V.: "The Protection of Large Transformers", Report 334, CIGRE-Session, Paris, June 1960.

[250] Holcomb, J.E.: "Distribution Transformer Magnetizing Inrush Current", AIEE Transactions, vol. 80, pp 697-702, December 1961.

[251] Holmgren, B.; Jenkins, R.S. and Riubrugent, J: "Transformer Inrush Current", Report 12-03, CIGRE-Session, Paris, September 1968.

[252] MacFadyen, W.K.; Simpson, R.R.S.; Slater, R.D. and Wood, W.S.: "Method of predicting transient current patterns in transformers", Proceedings IEE, vol. 120, no. 11, pp. 1393-1396, November 1973.

[253] Schultz, W.: "Saturation Phenomena when Energizing Transformers and their Effects on the Feeding System", Siemens Forsch.- u. Entwickl.- Ber., vol. 5, no. 4, pp. 183-186, August 1976.

[254] Schweitzer, E.O.; Larson, R.R. and Flechsig A.J.: "An Efficient Inrush Detection Algorithm for Digital Computer Relay Protection of Transformers", Paper No 77 510-1, IEEE PES Summer Meeting, Mexico City, July 1977.

[255] Yacamini, R. and Abu-Nasser, A.: "Numerical calculation of inrush current in single-phase transformers", IEE Proceedings, vol. 128, pt. B, no. 6, pp. 327-334, November 1981.

[256] Amano, H.: "Magnetizing Inrush Current of Shell-Type Three-Phase Transformers", Electrical Engineering in Japan, vol. 101, no. 3, pp. 56-64, 1981.

[257] Akpinar, S.; Coulson, M.; Simpson, R.R.S. and Slater, R.D.: "Calculation of transient current in transformers", IEE Proceedings, vol. 129, pt. C, no. 1, pp. 30-34, January 1982.

[258] Degens, A.J.: "Microprocessor implemented digital filters for inrush current detection", Electrical Power and Energy Systems, vol. 4, no. 3, pp. 196-205, July 1982.

[259] Ling, P.C.Y. and Basak, A.: "A New Detection Scheme for Realization of Magnetizing Inrush Current in Transformers", Fourth International Conference on Developments in Power System Protection, IEE Publication Number 302, pp. 239-244, 1989.

[260] Sidhu, T.S. and Sachdev, M.S.: "On-line Identification of Magnetizing Inrush and Internal Faults i Three-Phase Transformers", Paper 92 WM 205-5 PWRD, IEEE/PES 1992 Winter Meeting, New York, January 26-30, 1992.

[261] Chakravarthy, S.K.; Vasu, E. and Nayar, C.V.: "An analytical tool for studying transformer inrush current", International Journal Engineering Education, vol. 30, no. 4, pp. 36-373, October 1993.

[262] L.G. Perez; A.J. Flechsig; J.L. Meador; Z. Obradovic: "Training an artificial neural network to discriminate between magnetizing inrush and internal faults", IEEE Transactions on Power Delivery, vol. 9, no. 1, January 1994.

15.7 Over-Excitation

[263] Sealy, W.C.: "Over Excitation of Power Transformers", Allis-Chalmers Engineering Review, vol. 30, no. 4, pp. 18-19, 1965.

[264] Goff, L.E.: "Volt-per-Hertz Relays Protects Transformers Against Overexcitation", Electrical World, vol. 168, pp. 47-48, September 1967.

[265] Goff, L.E.: "Volt per Hz Relay Protects Transformers Against Overexcitation", Electrical World, vol. 168, no. , pp. 47-48, September 25, 1967.

[266] Russel, C.R. and Clarridge, C.H.: "New Design Overcomes Drift in Overexcitation Protection", Electrical World, vol. , no. , p. 32, January 6, 1969.

[267] Gantner, J. and Birch, F.H.: "Transformer Overfluxing Protection", Electra, no. 31, pp. 65-73, December 1973.

[268] Gartner, G. and Birch, F.H.: "Transformer Overfluxing Protection", Report CIGRE WG 34.01, Electra, pp. 65-73, 1973.

[269] Pettigrew, R. and Holloway, S.: "Operating and Application Experience With a Microprocessor Based Volts per Hertz Relay", Texas A&M Relay Conference, April 1987.

15.8 Modeling and Protection Techniques

[270] Fortescue, C.L.: "Method of Symmetrical Coordinates Applied to the Solution of Polyphase Networks", AIEE Transactions, vol. 37, pt. II, pp. 1027-1139, 1918.

[271] Cockey, E.A.: "Tripping Scheme by Microwave Gives High-Speed Transformer Protection", Electrical World, vol. 149, no. 10, pp. 49-51 + 94, March 10, 1958.

[272] Pieper, M and Vorwerk, H.J.: "Ionization Measurements on Instrument and Power Transformers by Means of Switching Surges Superimposed on A.C. Voltage", Brown Boveri Review, vol. 58, no. 6, pp. 196-200, June 1971.

[273] Johnston, L.; Tweed, N. Jr.; Ward, D.J. and Burke, J.J.: "Analysis of VEPCO's 34.5 kV distribution feeder faults as related to through fault failures of substation transformers", IEEE Transactions on Power Apparatus and Systems, vol. PAS-97, no. 5, pp. 1876-1888, September/October 1978.

[274] Hebert, P.P. and Steed, R.C.: "A High Voltage Bushing Thermal Performance Computer Model", IEEE Transactions on Power Apparatus and Systems, vol. PAS-97, no. 6, pp. 2219-2224, November/December 1978.

[275] McNutt, W.J. and Easley, J.K. Sr.: "Mathematical Modeling - A Basis for Bushing Loading Guides", IEEE Transactions on Power Apparatus and Systems, vol. PAS-97, no. 6, pp 2393-2404, November/December 1978.

[276] Harrold, R.T.: "Acoustic Waveguides for Sensing and Locating Electrical Discharges Within High Voltage Power Transformers and Other Apparatus", IEEE Transactions on Power Apparatus and Systems, vol. PAS-98, no. 2, pp. 449-457, March/April 1979.

[277] Rahman, M.A. and Dash, P.K.: "Fast algorithm for digital protection of power transformers", Proceedings IEE, vol. 129, pt. C, no. 2, pp. 79-85, March 1982.

[278] Brandwajn, V.; Dommel, H.W. and Dommel, I.I.: "Matrix Representation of Three-Phase N-Winding Transformers", IEEE Transactions on Power Apparatus and Systems, vol. PAS-101, no. , pp. 1369-1378, June 1982.

[279] Poyser, T.D.: "An On-Line Microprocessor Based Transformer Analysis System to Improve the Availability and Utilization of Power Transformers", IEEE Transactions on Power Apparatus and Systems, vol. PAS-102, no. 4, pp. 957-962, April 1983.

[280] Tay, H.C. and Swift, G.W.: "A Novel Method of Detecting Asymmetrical Transformer Core Saturation Due to GIC", Paper No. 83 SM 410-8, IEEE/PES Summer Meeting, Los Angeles, July 1983.

[281] Tay, H.C. and Swift, G.W.: "A Novel Method of Detecting Asymmetrical Transformer Core Saturation Due to GIC", IEEE Transactions on Power Apparatus and Systems, vol. PAS-103, no. 1, pp. 183-189, January 1984.

[282] Fakruddin, D.B.; Parthasarathy, K.; Jenkins,L. and Hogg, B.W.: "Application of Haar functions for transmission line and transformer protection", Electrical Power and Energy Systems, vol. 6, no. 3, pp. 169-180, July 1984.

[283] Jeyasurya, B. and Pahman, M.: "A Comprehensive Study of Transformer Protection Algorithms", Transactions of the Engineering and Operating Division of the CEA, vol. 25, pt. 3, Paper No. 86-SP-154, 1986.

[284] Heinrichs, F.W.: "The impact of fault-detection methods and analysis on the transformer operating decision", IEEE Transactions on Power Delivery, vol. PWRD-2, no. 3, pp. 836-842, July 1987.

[285] Maun, J.-C.: "New possibilities in the monitoring and testing of digital relays - Application to a power transformer protection", Conference on "Computer Relaying - An assessment of Recent development and Future Trends", Blacksburg - Virginia, 1987, 14 p.

[286] Dash, P.K. and Rahman, M.A.: "A New Algorithm for Digital Protection of Power Transformers", Transactions Canadian Electrical Association Engineering and Operting Division, vol. 26, pt. 4, 1987, Paper No. 87-SP-169.

[287] M.A. Rahman and B. Jeyasurya: "A State-of-the-Art Review of Transformer Protection Algorithms", IEEE Transactions on Power Delivery, vol. 3, no. 2, April 1988, pp. 531-541.

[288] Inagaki, K.; Higaki, M.; Matsui, Y.; Kurita, K.; Suzuki, M.; Yoshida, K. and Maeda, T.: "Digital Protection Method for Power Transformers Based on an Equivalent Circuit Composed of Inverse Inductance", IEEE Transactions on Power Delivery, vol. 3, no. 4, pp. 1501-1510, October 1988.

[289] Maun, J.-C.: "Les relais numériques dans les réseaux hautes tensions - Application à la protection de transformateurs", Cycle de conferences S.R.B.E. "Les Protections dans les réseaux électriques", Bruxelles, 1988, 21 p.

[290] Maun, J.-C.; Poncelet, R.; Henn, V.; Lienart, P.; and Goossens, J.: "Méthodes de développement et d'essai des protections numériques. Application à la protection des transformateurs", Report 34-05, CIGRE-Session, Paris, 1988.

[291] Desai, B.T.; Gupta, H.O. and Vasantha, M.K.: "New One-Cycle Static Blocking Scheme for Inrush in Differential Relay", IEE Proceedings, pt. C, vol. 136, no. 1, January 1989, pp. 48-54.

[292] Sachdev, M.S.; Sidhu, T.S. and Wood, H.C.: "A Digital Relaying Algorithm for Detecting Transformer Winding Faults", IEEE Transactions on Power Delivery, vol. 4, no. 3, pp. 1638-1648, July 1989.

[293] Sachdev, M.S.; Sidhu, T.S. and Wood, H.C.: "A Non-Linear Modelling Approach for Detecting Winding Faults in Power Transformers", Transactions CEA E&O Div., vol. 28, pt. 4, Paper No. 89-SP-142, 1989.

[294] Sidhu, T.S.; Sachdev, M.S. and Wood, H.C.: "Detecting Transformer Winding Faults Using Non-Linear Models of Transformers", Fourth International Conference on Developments in Power System Protection, IEE Publication Number 302, 1989, pp. 70-74.

[295] Sidhu, T.S.; Sachdev, M.; Wood, H.C. and Nagpal, M.: "Design, Implementation and Testing of a Microprocessor Based High-Speed Relay for Detecting Transformer Winding Faults", IEEE Transactions on Power Delivery, vol. 7, no. 1, pp. 108-117, January 1992.

[296] Ilar M. and Stranne, G.: "Numerical Protection Systems for Generators and Generator Transformer Units", ABB Review, pp. 27-38, January 1993.

[297] Basha, A.M. and Anantha Raman, K.: "PC Based IIR Filter Algorithm for Power Transformer Relaying", Electric Power Systems Research, vol. 28, no. 2, pp. 123-127, November 1993.

[298] Rosolowski, E.; Kasztenny, B.; Izykowski, J.; Saha, M.M. and Hillström, B.: "A Digital Model of a Power Transformer for Real-Time Testing of Protective Relays", Proceedings of the International Conference on Digital Power System Simulators, Montreal, Canada, pp. 189-194, May 28-30, 1997.

[299] M.S. Sachdev, T.S. Sidhu and H.C. Wood, "A Digital Relaying Algorithm for Detecting Transformer Winding Faults", IEEE Transactions on Power Delivery, Vol. 4, No. 3, July 1989, pp. 1638-1648.

[300] T.S. Sidhu, M.S. Sachdev and H.C. Wood, "Microprocessor-Based Relay for Protecting Power Transformers", IEE Proceedings-C, Vol.137, No. 6, pp. 436-444

[301] A.G. Phadke and J.S. Thorp, "A New Computer-Based Flux Restrained Current Differential Relay for Power Transformer Protection", IEEE Trans. on Power Apparatus and Systems, Vol. 102, No. 11, November 1983, pp. 3624-3629.

15.9 Buchholz Relay and Gas Analysis

[302] Prinz, H.: "The New Siemens-Buchholz Relay", Siemens Zeitschrift, vol. 16, p. 298, August 8, 1936.

[303] Hentz, R.A.: "Gas-Pressure Relays", EEI Bulletin, vol. 6, pp. 82-84, March 1938.

[304] "Gas-Pressure Relays Protect Transformer", Electrical World, vol. 109, pp. 1068, March 26, 1938.

[305] Ryder, C.: "Transformer Protection by Metrovick Buchholz Devices", Metropolitan-Vickers Gazette, vol. 17, no. 300, pp. 236-238, April 1938.

[306] Stumpf, F.: "The Buchholz Protective Relay", Praktisches Wissen, vol. 8, pp. 185-193, 1946.

[307] Madill, J.T.: "Typical Transformer Fault and Gas Detector Relay Protection", AIEE Transactions, vol. 66, pp. 1052-1060, 1947.

[308] Bean, R.L. and Cole, H.L.: "A Sudden Gas Pressure Relay for Transformer Protection", AIEE Transactions, vol. 72, pt. III, (Power Apparatus and Systems), pp. 480-483, June 1953.

[309] Howe, V.H.; Massey, L. and Wilson, M.: "The Identity and Significance of Gases Collected in Buchholz Protectors", Metropolitan Vickers Gazette, vol. 27, no. 442, pp. 139-148, May 1956.

[310] Harrison, D.: "Transformer Gas Testing", Ontario Hydro Research News, vol. 9, no. 4, pp. 11-15, December 1957.

[311] Anderson, R.N.: "A New Fault Pressure Relay - Provides Fast, Effective Power Transformer Protection", Distribution, vol. 21, no. 3, pp. 8-9, July 1959.

[312] Baleriaux, H. and Brohet, F.: "Buchholz Relays", Report 321, CIGRE-Session, Paris, June 1960.

[313] Haberl, H.W.; Madill, J.T. and Smith, R.K.: "Extensive Use of Gas Detector Relays in Canada", Report 120, CIGRE-Session, Paris, June 1960.

[314] Gore, J.W.; Jr.; Gordon, M.B. and Reichert, E.C.: "Incipient Transformer Faults Quickly Detected", Electrical World, vol. 155, pp. 80-83, April 24, 1961.

[315] Pugh, P.S. and Wagner, H.H.: "The Detection of Incipient Faults on Transformers by Gas Analysis", AIEE Transactions, vol. 80, pt. III (Power Apparatus and Systems), pp. 189-195, June 1961.

[316] Aicher, L.C. and Vora, J.P.: "Gas Analysis. A transformer Diagnostic Tool", Allis-Chalmers Elec. Review, vol. 28, pp. 22-24, First Quarter 1963

[317] Crawford, C.I. and Wilson, A.F.: "Incipient Transformer Fault Detected by Combustible Gas Monitoring Program and Ultra-Sound Tests", IEEE Transactions on Power Apparatus and Systems, vol. PAS-83, no. 9, pp. 926-930, September 1964.

[318] Vora, J.P. and Aicher, L.C.: "Transformer Fault - Gas Analysis and Interpretation", IEEE Transactions on Power Apparatus and Systems, vol. PAS-84, no. 2, pp. 172-176, February 1965.

[319] Mason, J.H.: "Discharge Detection and Measurements", Proceedings IEE, vol. 112, no. 7, pp. 1407-1423, July 1965.

[320] Wagner, H.H.: "Five Years' Experience with Transformer Total Combustible Gas Fault Detector Tests", IEEE Transactions on Power Apparatus and Systems, vol. PAS-84, no. 8, pp. 700-706, August 1965.

[321] Monitoring Performance of Oil-Filled Transformers", Brown-Boveri Review, vol. 54, pp. 104-111, February/March 1967.

[322] Sheppard, H.R.: "Why is Gas Generated in Oil-filled Transformers?", Transmission and Distribution, vol. 20, pp. 63-65, January 1968.

[323] Sheppard, H.R.: "Dangerous conditions are detected by analyzing transformer gases", Transmission and Distribution, vol. 20, pp. 71-74, February 1968.

[324] Sheppard, H.R.: "Transformer Gas Analysis as a Diagnostic Tool", Westinghouse Engineering, vol. 28, pp. 58-60, March 1968.

[325] Stamm, H. and Schultze, W.: "Determination of Insulation Consisting of Paper-Oil Layers and Its Study by Gas Chromatography", Report 12-14, CIGRE-Session, Paris, June 10-20, 1968.

[326] West, S.P.: "Maintenance and Tests Make Fault Pressure Relays Reliable", Electrical World, vol. , no. , pp. 45-46, January 19, 1970.

[327] Boyaris, E. and Guyot, W.S.: "Experience with Fault Pressure Relaying and Combustible Gas Detection in Power Transformers", Proceedings of the American Power Conference, vol. 33, pp. 1116-1126, 1971.

[328] McNutt, W.J. and Patel, M.R.: "The Combined Effects of Thermal Aging and Short-Circuit Stresses on Transformer Life", IEEE Transactions on Power Apparatus and Systems, vol. PAS-95, no. 4, pp. 1275-1286, July/August 1976.

[329] Schliesing, H.: "Ein neues Verfahren zur schnellen Analyse von Buchholzgasen aus Transformatoren", Elektrizitätswirtschaft, vol. 77, no. 19, pp. 676-679, September 11, 1978.

[330] Heinrichs, F.W.: "Bubble Formation in Power Transformer Windings at Overload Temperature", IEEE Transactions on Power Apparatus and Systems, vol. PAS-98, no. 5, pp. 1576-1582, September/October 1979.

[331] Kelly, J.J.: "Transformer Fault Diagnosis by Dissolved-Gas Analysis", IEEE Transactions on Industrial Applications, vol. IA-16, no. 6, pp. 777-782, November/December 1980.

[332] Dornenburg, E. and Gerber, O.E.: "Analysis of Dissolved and Free Gases for Douglas, D.H.; Lawrence, C.O. and Templeton, J.B.: "Factory Overload Testing of a Large Power Transformer", IEEE Transactions on Power Apparatus and Systems, vol. PAS-104, no. 9, pp. 2492-2500, September 1985.

[333] Buchert, J.: "Transformer Fault Pressure Relay Survey - ECAR Protection Panel - 1984", Georgia Tech Protective Relaying Conference, April 30 - May 2, 1986.

[334] K. Barrett: "Dissolved Gas-In-Oil Analysis", 42nd Annual Conference for Protective Relay Engineers, Texas A&M University, College Station, April 17-19, 1989.

15.10 Through Fault Issues

[335] Markes, J.A.: "Power Transformer Thru-Fault Failures: No Short-Cut Solutions in Sight (Special Report II), Electric Light and Power, vol. , no. , pp. 58-63, April 1971.

[336] McCauley, T.M.: "Through-Fault Capability Requirements For Unit Auxiliary Transformers", IEEE Transactions on Power Apparatus and Systems, vol. PAS-96, no. 5, pp. 1639-1647, September/October 1977.

[337] Griffin, C.H.: "Development and Application of Fault-Withstand Standards for Power Transformers", IEEE Transactions on Power Apparatus and Systems, vol. PAS-104, no. 8, pp. 2177-2189, August 1985.

[338] Brown, R. and Khan, S.: "Planning and Protection Implication of Reduced Fault Withstand Time for Power Transformers", IEEE Transactions on Power Delivery, vol. PWRD-1, no. 4, pp. 60-67, October 1986.

15.11 Thermal Protection

[339] Montsinger, V.M. and Camilli, G.: "Thermal Protection of Transformers under Overload Conditions", AIEE Transactions, vol. 63, pp. 160-164 + 444, April 1944.

[340] Denault, C.L.: "Thermal Protection of Power Transformers", Westinghouse Engineer, vol. 8, pp. 103-105, 1948.

[341] Jean-Richard, C.: "Thermal Protection of Transformers", Report 309, CIGRE-Session, Paris, 1950.

15.12 Current Transformers

[342] Marshall, D.E. and Langguth, P.O.: "Current Transformer Excitation under Transient Conditions", AIEE Transactions, vol. 48, no. 4, pp. 1464-1474, October 1929.

[343] Wentz, E.C. and Sonneman, W.K.: "Current Transformers for High Speed Differential Protection with Particular Reference to Offset Transient Currets", AIEE Transactions, vol. 59, pt. III, pp. 481-488, 1940.

[344] Wentz, E.C. and Sonneman, W.K.: "Current Transformers for High Speed Differential Protection with Particular Reference to Offset Transient Currets", AIEE Transactions, vol. 59, pt. III, pp. 1144-1148, 1940.

[345] Hodgkiss, J.W.: "The Behavoiour of Current Transformers Subjected to Transient Asymmetric Currents and their Effects on Protective Relays", Report 329, CIGRE-Session, Paris, 1960.

[346] "What Extra CTs do for Autotransformer Reliability", Electrical World, vol. , no. , pp. 44-46, October 27, 1969.

[347] Iwanusiw, O.W.: "Remanent Flux in Current Transformers", Ontario Hydro Research Quarterly, vol. , pp. 18-21, 1970.

[348] Connor, E.E.; Greb, R.G.; Wentz, E.C.: "Control of Residual Flux in Current Transformers", IEEE Transactions on Power Apparatus and Systems, vol. PAS-92, no. , pp. 1226-1233, 1973.

15.13 Loading

[349] Mozina, C.J.: "Stretch Your Substation Transformer Rating", Electrical World, vol. 195, no. 1, pp. 98-99, January 1981.

[350] Lahoti, B.D. and Flowers, D.E.: "Evaluation of Transformer Loading Above Nameplate Rating", IEEE Transactions on Power Apparatus and Systems, vol. PAS-100, no. 4, pp. 1989-1998, April 1981.

[351] "Progress Report on a Guide for Loading Oil-Immersed Power Transformers Rated in Excess of 100 MVA", IEEE Committee Report, IEEE Transactions on Power Apparatus and Systems, vol. PAS-100, no. 8, pp. 4020-4032, August 1981.

[352] "Overloading and loading limitations of large transformers", Electra, no. 86, pp. 33-51, January 1983.

15.14 Generator-Transformer Protection

[353] "Boulder Canyon Project; Generator and Transformer Relaying", Electric Journal, vol. 33, p. 492, November 1936.

[354] Kumar, N.M.A. and Parthasrathy, K.: "Power System Protection 1. Generator and transformer protection", J. Instn. Engrs. (India) Elect. Engineering Div., vol. 49, no. 12, pt. EL6, pp. 298-300, August 1969.

[355] Müller, H.-J.: "Moderne Schutzrelais für Leitungen, Sammelschienen und Transformatoren", BBC-Nachrichten, vol. 51, no. 1, pp. 32-40, 1969.

15.15 Others

[356] "Recommended Practices for the Protection of Electrical Apparatus", AIEE Committee Report, AIEE Transactions, vol. 52, pp. 607-613, 1933.

[357] Bullen, H.G.: "Neutral Relay", Electrical Review, vol. 117, p. 366, September 1935.

[358] "General Electric Ground-Detector Relay", General Electric Review, vol. 38, p. 154, March 1935.

[359] "Transformatorenschutz", Brown Boveri Mitteilungen, vol. pp. 143-, 1947.

[360] Farry, O.T.: "Autotransformers for Power Systems", AIEE Transactions, vol. 73, pt. III-B, pp. 1486-1495, December 1954.

[361] Klingshirn, E.A.; Moors, H.R. and Wentz, E.C.: "Detection of Faults in Power Transformers", AIEE Transactions, vol. 76, pt. III, pp. 87-98, April 1957.

[362] Cogbill, B.A.: "Are Transformer Stabilizing Windings Necessary?", Electrical Engineering, vol. 78, no. 9, pp. 890-, September 1959.

[363] "Protection of Power Transformers. 1962 Relays Committee Survey of Practices", AIEE Committee Report, IEEE Transactions on Power Apparatus and Systems, vol. PAS-82, no. 12, pp. 1040-1044, December 1963.

[364] O'Neil, J.E.: "Switching Surges Must Be Considered in Transformer Protection Design", Power Engineering, vol. 69, no. 12, pp. 49-50, December 1965.

[365] Martin, J.E.: "Balance Cost and Risk in Protection of Transmission Tap Transformers", Electric Light and Power, vol. 44, no. 12, pp. 66-68, December 1966.

[366] Locke, A.H.: "What's behind Rising Power Transformer Failure Rates?", Electric Light and Power, vol. , no. , pp. 74-75, January 1970.

[367] Patel, T.U.: "Single Ground Serves Twin-Delta Power Transformers", Electric Light and Power, vol. , no. , pp. 86-87, February 1970.

[368] Lockie, A.M.: "Time to Re-Examine Your Transformer Protection?", Electric Light and Power, vol. , no. , pp. 52-53, December 1970.

[369] Borst, J.D.; Lockie, A.M. and Ristuccia, D.J.: "Stop Violent Transformer Failures Before They Start", Electric Light and Power, vol. , pp. 62-65, March 1973

[370] Kawashima, K.; Fukuda, T.; Kashima, Y. and Maruyama, K.: "Improvement of Reliability for 500 kV Transformers", Hitachi Review, vol. 24, no. 11, pp. 421-427, November 1975.

[371] Fischer, A.: "Übererregungsschutz für Transformatoren", Siemens-Zeitschrift, vol. 50, pp. 20-22, 1976.

[372] Dutton, J.C. and McNutt, W.J.: "Transformer Standards - Status and Trends", IEEE Transactions on Industrial Applications, vol. IA-16, no. 1, pp. 17-19, January/February 1980.

[373] McNutt, W.J.; Kaufmann, A.P.; Vitols, A.P. et. al.: "Short-time failure mode considerations associated with power transformer overloading", IEEE Transactions on Power Apparatus and Systems, vol. PAS-99, no. 3, pp. 1186-1197, May/June 1980.

[374] Dutton, J.C.; McCann, F.J. and Smith, R.L.: "Transformer Protection Then and Now", Electric Forum, vol. 6, no. 3, pp. 28-31, 1980.

[375] "An international survey on failures in large power transformers in service", Electra, no. 88, pp. 21-48, May, 1983.

[376] Yoder, S.D.: "Cable Limiters for Three-Phase Padmounted Transformers", Transmission and Distribution, vol. 36, no. 12, pp. 40-43, December 1984.

[377] Poyser, T.D.; Yannucci, D.A.; Templeton, J.B. and Lenderking, B.N.: "On-Line Monitoring of Power Transformers", IEEE Transactions on Power Apparatus and Systems, vol. PAS-104, no. 1, pp. 207-211, January 1985.

[378] Dietrich, W.: "Zur Frühgeschichte des Transformators", ETZ, vol. 106, no. 14, pp. 748-753, 1985.

[379] "Summary of the 'Guide for Protective Relay Applications to Power Transformers' ANSI C37.91", IEEE Committee Report, IEEE Transactions on Power Apparatus and Systems, vol. PAS-104, no. 12, pp. 3538-3543, December 1985.

[380] Iyer, G.R.: "Transformer Faults: Causes and Remedies", Electrical India, vol. 26, no. 10, pp. 27-28, 31st May, 1986.

[381] Dietrich, W.: "Entwicklung des Transformators von der Jahrhundertwende bis heute", ETZ, vol. 107, no. 22/23, pp. 1080-1085, 1986.

[382] "Summary of IEEE Guide for the Protection of Network Transformers", IEEE Power System Relaying Committee Report, IEEE Transactions on Power Delivery, vol. 5, no. 3, pp. 1288-1291, July 1990.

[383] Allan, D.J.: "Power transformers – the second century", Power Engineering Journal, pp. 5-14, January 1991.

[384] Bladow, J. and Montoya, A.: "Experiences with Parallel EHV Phase Shifting Transformers", IEEE Transactions on Power Delivery, vol. 6, no. 3, July 1991.

[385] P.E. Krausse and C.S. Miller: "Problems Protecting Phase-Shifting Transformers", Transmission and Distribution, vol. 43, no. 11, pp. 60-66, 1991.

[386] Kasztenny, B.; Rosolowski, E.; Saha, M.M. and Hillstrom, B.: "A self-organizing fuzzy logic based protective relay-an application to power transformer protection", IEEE Transactions on Power Delivery, vol. 12, no. 3, pp. 1119-1127, July 1997.

[387] Kasztenny, B.; Rosolowski, E.; Izykowski, J.; Saha, M.M.; Hillstrom, B.: "Fuzzy logic controller for on-load transformer tap changer", IEEE Transactions on Power Delivery, vol. 13, no. 1, pp. 164-170, January 1998.

[388] IEC 60214 Ed 1.0: Tap-Changers, Annex A

[389] A.R. Bergen and V. Vittal, “Power System Analysis,” 2nd Edition, Prentice Hall, 2000.

[390] P.G. Mclaren and M.A. Redfern, “Fourier-series techniques applied to distance protection,” Proc. IEE, Vol. 122, No.11, November 1975, 1301-1305.

[391] Jun-Zhe Yang and Chih-Wen Liu, “A Precise Calculation of Power System Frequency and Phasor,” IEEE Trans on Power Delivery, Vol. 15, No.2, April 2000, pp.494-499.

[392] A.T. Johns and J.R. Platts, “Digital Protection for Power System,” IEE Power Series 15, 1995.

[393] J. F. Hauer, C. J. Demeure, and L. L. Scharf, “Initial results in Prony analysis of power system response signals,” IEEE Trans Power Systems, Vol. 5, No. 1, February 1990, pp. 80-89.

[394] O. Chaari, P. Bastard, and M. Meunier, “Prony’s method: an efficient tool for the analysis of earth fault currents in Petersen-coil-protected networks,” IEEE Trans. Power Delivery, vol. 10, No. 3, July 1995, pp. 1234-1241.

[395] A.A. Girgis, R. GroverBrown, “Application of Kalman Filtering in Computer Relaying,” IEEE Trans, PAS-101, No. 7, July 1981, pp.3471-3480.

[396] G.Benmouyal, “Frequency-Doman Characterization of Kalman Filters as Applied to Power System Protection,” IEEE Trans. On Power Delivery, July 1992, Vol. 7, pp. 1129-1138.

[397] R.G. Brown, “Introduction to Random Signal Analysis and Kalman Filtering,” John Wiley and Sons, 1983.

[398] Sachdev, M. S. and Shah, D. V., Transformer Differential and Restricted Earth Fault Protection Using a Digital Processor”, Trans. of the Engineering and Operating Division of the Canadian Electrical Association, Vol. 20, Part 4, 1981, pp. 1-11.

[399] Thorp, J. S. and Phadke, A. G., “A Microprocessor Based Three-Phase Transformer Differential Relay”, IEEE Trans. on Power Apparatus and Systems, Vol. PAS-101, 1982, pp. 426-432.

[400] Murty, Y. V. V. S. and Smolinski, W. J., “Design and Implementation of a Digital Differential Relay for a 3-Phase Power Transformer Based on Kalman Filtering Theory”, IEEE Trans. on Power Delivery, Vol. 3, April 1988, pp. 525-533.

[401] Inagaki, K., Higaki, M., Matsui, Y., Suzuki, M., Yoshida, K. and Maeda, T., “Digital Protection Method for Power Transformers Based on an Equivalent Circuit Composed of Inverse Inductance”, IEEE Trans. on Power Delivery, Vol. 3, 1988, pp. 1501-1510.

[402] Sachdev, M. S., Sidhu, T. S. and Wood, H. C., “A Digital Relaying Algorithm for Detecting Transformer Winding Faults”, IEEE Trans. on Power Delivery, Vol. 4, No. 3, 1989, pp. 1638-1648.

[403] Sidhu, T. S. and Sachdev, M. S., “On-line Identification of Magnetizing Inrush and Internal Faults in Three-Phase Transformers”, IEEE Trans. on Power Delivery, Vol. 7, No. 4, 1992, pp. 1885-1891.

[404] Mikrut, M., Winkler, W. and Witek, B., “Performance of Differential Protection for Three-winding Power Transformers During Transient C.T.’s Saturation”, 4th Int. Conf. on Developments in Power System Protection, IEE Pub. No. 302, 1989, pp. 40-44.

[405] Hosemann, G. and Steigerwald, H. M., “Modal Saturation Detector for Digital Differential Protection”, IEEE Trans. on Power Delivery, Vol. 8, No. 3, July 1993, pp. 933-940.

[406] McLaren, P. G., et al., “New Directional Element for Numerical Distance Relays”, IEEE Trans. on Power Delivery, Vol. 10, No. 2, 1995, pp. 666-75.

[407] Sidhu, T. S., Sunga, B. and Sachdev, M. S., “A Digital Technique for Stator Winding Protection of Synchronous Generators”, Electric Power Systems Research, Vol. 36, 1996, pp. 45-55.

[408] FTP Site : ftp://ftp.ee.umanitoba.ca/pub/PSCAD_EMTDC/ outgoing/ct_cvt/.

[409] Bogdan Kasztenny, Mladen Kezunovic, “Digital Relays Improve Protection of Large Transformers”, IEEE Computer Application in Power, October 1998, pp:39-45

[410] M. A. Rahman and B. Jeyasurya, “A State-of-the-Art Review of Transformer Protection Algorithms”, IEEE Trans. On Power Delivery, Vol.3, No.2, 1988, pp.534-544.

[411] P.Liu, O.P.Malik, C.Chen, G.S.Hope, and Y.Guo “Improved Operation of Differential Protection of Power Transformers for Internal Faults”, IEEE Trans on Power Delivery, Vol. 7, No.4, 1992, pp.1912-1919.

[412] Sidhu, T. S., Sachdev, M. S., wood, H. C. and Nagpal, M., “Design, Implementation and Testing of A Micor-processor-based High-speed Relay for Detecting Transformer Winding Faults”, IEEE Trans on Power Delivery, Vol. 7, No.1, 1992, pp.108-117.

[413] P Bastard, M Meunier and H Regal, “Neural-Network-Based Algorithm for Power Transformer Differential Relays”, IEE Proc., Generation, Transmission and Distribution, Vol. 142, No. 4, pp. 386-392, July 1995.

[414] G Perez, A J Flechsig, J L Meador and Z Obradovic, “Training an Artificial Neural Network to Discriminate Between Magnetizing Inrush and Internal Fault”, IEEE Trans. On Power Delivery, Vol. 9, No. 1, pp.434-441, January 1994.

[415] Pihler, B Grcar and D Dolinar, “Improved Operation of Power Transformer Protection Using Artificial Neural Network”, IEEE Trans. On Power Delivery, Vol. 12, No. 3, pp.1128-1136, July 1997.

[416] M.R.Zaman, M.A. Rahman, “Experimental Testing of the Artificial Neural Network Based Protection of Power Transformers”, IEEE Trans. On Power Delivery, Vol. 13, No. 2, pp.510-517, April 1998.

[417] W.A.Wilkinson and M.D. Cox, “Discrete Wavelet Analysis of Power System Transients”, IEEE Trans. On Power System, Vol.11, No.4, November 1996, pp:2038-2044.

[418] G. T. Heydt and A. W. Galli, “Transient Power Quality Problems Analyzed Using Wavelets”, IEEE Trans. On Power Delivery, Vol.12, No.2, April 1997, pp:908-915.

[419] Stantosh Kumar Pandey and L .Satish, “Multiresolution Signal Decomposition: A New Tool for Fault Detection in Power Transformers During Impulse Tests”, IEEE Trans. On Power Delivery, Vol.13, No.4, October 1998, pp:1194-1200.

[420] P L Mao, R K Aggarwal, Z Q Bo, “Analysis of Transient Phenomena in Power Transformers using Wavelet Transforms”, the 34th University Power Engineering Conference, United Kingdom, 8-10 Sept. 1999

[421] Walter A. Elmore , “Protective Relaying Theory and Application”, ABB Power T&D Company Inc, Relay Division, Coral Springs, Florida, 1995

[422] A. Wright and P.G. Newbery, Electric Fuses, Institute of Electrical Engineers, Power Series 2, 1982, ISBN 0-906048-78-8

[423] The J & P Switchgear Book, Johnson & Phillips Ltd., Electrical Engineers & Cable Makers, Charlton, London, S.E.7

[424] A.R. van C. Warrington, Protective Relays, Their Theory and Practice, Vol. 1, Chapman and Hall, London, UK, 1962

[425] Applied Protective Relaying, A New "Silent Sentinels"® Publication, Westinghouse Electric Corporation, Newark, NJ, USA, 1957

[426] G.I. Atabekov, The Relay Protection of High Voltage Networks, Pergamon Press, London, UK, 1960

[427] M.S. Sachdev, et al., Terms Used by Power System Protection Engineers, IEEE Power Engineering Society, Piscataway, NJ, Special Publication No. 98TP130-0, 1998

[428] A.R. van C. Warrington, Protective Relays, Their Theory and Practice, Vol. 2, Chapman and Hall, London, UK, 1968

[429] T.S. Madhava Rao, Power System Protection, Static Relays, Tata McGraw-Hill Publishing Company Limited, New Delhi, India, 1979

[430] F.H.Last and A. Stalewski, "Protective Relay Gear as a Part of Automatic Power System Control", IEE Conference Publication 16, Part I, March 1966

[431] G.D. Rockefeller, "Fault Protection with a Digital Computer", IEEE Transactions on Power Apparatus and Systems, Vol. 88, No. 4, April 1969, pp.438-461

[432] M.S. Sachdev (Coordinator), et al., Computer Relaying, Tutorial Course Text, Institute of Electrical and Electronic Engineers, New York, N.Y., U.S.A., Pub No. 79 EH0148-7-PWR, 1979

[433] E.P. Walker, "The Application of Microprocessor Techniques to Protection Relays", Transactions of the Engineering and Operating Division of the Canadian Electrical Association, Montreal, Canada, Vol. 21, Part 3, 1982, Paper No. 82-SP-148

[434] M.S. Sachdev (Coordinator), et al. Microprocessor Relays and Protection Systems, Tutorial Course Text, Institute of Electrical and Electronics Engineers, Piscataway, N.J. U.S.A., Pub No. 88EH0269-1-PWR, 1988

[435] M.S. Sachdev (Coordinator), et al, Advancements in Microprocessor Based Protection and Communication, IEEE Tutorial Course, Institute of Electrical and Electronics Engineers, Piscataway, N.J. U.S.A., Pub No. 97TP120-0, 1997

[436] M.S. Sachdev and M.A. Baribeau, "A New Algorithm for Digital Impedance Relays", IEEE Transactions on Power Apparatus and Systems, Vo. 98, No. 6, December 1979, pp. 2232-2240

[437] W.D. Breingan, M.M. Chen and T.F. Gallan, "The Laboratory Investigation of a Digital System for the Protection of a Transmission Line", IEEE Transactions on Power Apparatus and Systems, Vol. 98, No. 2, March 1979, pp. 350-368

[438] M.S. Sachdev, T.S. Sidhu and H.C. Wood, "A Digital Relaying Algorithm for Detecting Transformer Winding Faults", IEEE Transactions on Power Delivery, Vol. 4, No. 3, July 1989, pp. 1638-1648

[439] S.H. Horowitz, A.G. Phadke and J.S. Thorp, "Adaptive Transmission System Relaying", IEEE Transactions on Power Delivery, Vol. 3, No. 4, October 1988, pp. 1436-1445

[440] Optical Voltage and Current Sensor, NxtPhase Incorporated, Phoenix, AZ, USA